CUDEVICES



# **MODEL:** PJ-063BH | **DESCRIPTION:** DC POWER JACK

### FEATURES

- 2.5 mm center pin
- 8.0 A rating
- right-angle orientation
- through hole
- shielded
- kinked pins



RoHS

## SPECIFICATIONS

| parameter | conditions/description | min | typ | max | units |
|---|---|---|---|---|---|
| rated input voltage | | | 24 | | Vdc |
| rated input current | | | | 8.0 | A |
| contact resistance | | | | 30 | mΩ |
| insulation resistance | at 500 Vdc | 100 | | | MΩ |
| voltage withstand | | | | 500 | Vac |
| insertion/withdrawal force | | 0.3 | | 3 | kg |
| terminal strength | any direction for 10 seconds | | | 500 | g |
| operating temperature | | -25 | | 85 | °C |
| life | | | 5,000 | | cycles |
| flammability rating | UL94V-0 | | | | |
| RoHS | yes | | | | |

## SOLDERABILITY

| parameter | conditions/description | min | typ | max | units |
|---|---|---|---|---|---|
| wave soldering | dipped in solder pot for 5 ±0.5 seconds | 255 | 260 | 265 | °C |

## MECHANICAL DRAWING

units: mm
tolerance:
X. ±0.50 mm
X.X ±0.30 mm
X.XX ±0.20 mm
X.XXX ±0.10 mm
PCB: ±0.05 mm

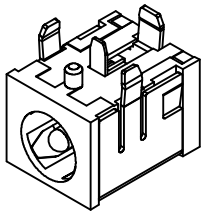

| DESCRIPTION | MATERIAL | PLATING/COLOR |
|---|---|---|
| center pin | copper | nickel |
| terminal 1 | copper alloy t=0.40 | silver |
| terminal 2 | copper alloy t=0.25 | silver |
| spring terminal | copper alloy t=0.25 | silver |
| shield | brass | silver |
| cover | PBT (UL94V-0) | black |
| housing | PBT (UL94V-0) | black |

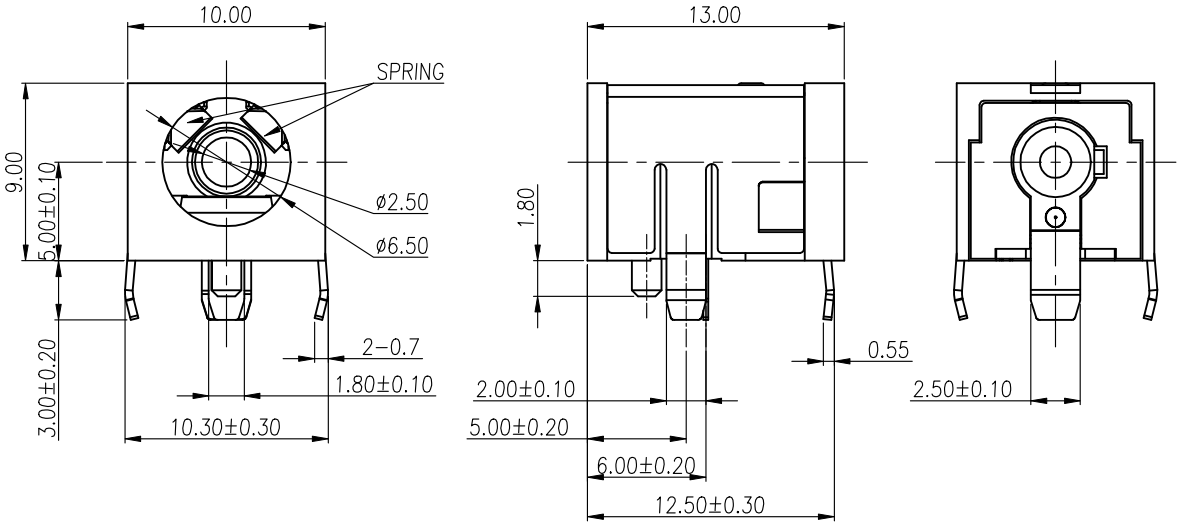


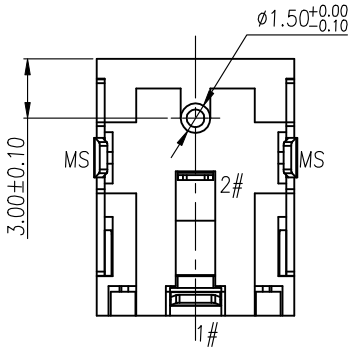


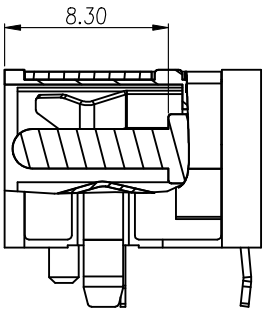


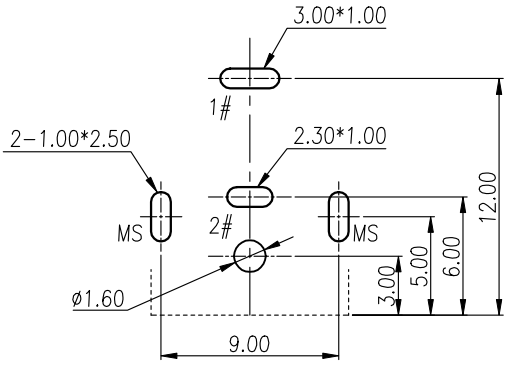


Recommended PCB Layout
Top View

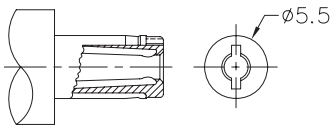


MATING PLUG
Jack Insertion Depth: 8.30 mm

| SCHEMATIC | 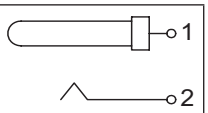  |
|---|---|
| Model | PJ-063BH |
| Center Pin | Ø2.5 mm |

## REVISION HISTORY

| rev. | description | date |
|---|---|---|
| 1.0 | initial release | 07/23/2009 |
| 1.01 | applied new spec template | 01/09/2014 |
| 1.02 | increased voltage rating | 04/14/2016 |
| 1.03 | brand update | 10/31/2019 |
| 1.04 | product reengineered for improved manufacturability and production yield, see PCN for details | 10/20/2022 |

The revision history provided is for informational purposes only and is believed to be accurate.

CUI Devices offers a one (1) year limited warranty. Complete warranty information is listed on our website.

CUI Devices reserves the right to make changes to the product at any time without notice. Information provided by CUI Devices is believed to be accurate and reliable. However, no responsibility is assumed by CUI Devices for its use, nor for any infringements of patents or other rights of third parties which may result from its use.

CUI Devices products are not authorized or warranted for use as critical components in equipment that requires an extremely high level of reliability. A critical component is any component of a life support device or system whose failure to perform can be reasonably expected to cause the failure of the life support device or system, or to affect its safety or effectiveness.

**cuidevices.com**