Data sheet



AFM60A-TBAL262144

AFS/AFM60 SSI

ABSOLUTE ENCODERS

SICK
Sensor Intelligence.



Illustration may differ

Ordering information

Type	part no.
AFM60A-TBAL262144	1059168

Other models and accessories ➜ www.sick.com/AFS_AFM60_SSI

Detailed technical data

Safety-related parameters

$MTTF_D$ (mean time to dangerous failure)	250 years (EN ISO 13849-1) [1]

[1] This product is a standard product and does not constitute a safety component as defined in the Machinery Directive. Calculation based on nominal load of components, average ambient temperature 40 °C, frequency of use 8760 h/a. All electronic failures are considered hazardous. For more information, see document no. 8015532.

Performance

Number of steps per revolution (max. resolution)	262,144 (18 bit)
Number of revolutions	4,096 (12 bit)
Max. resolution (number of steps per revolution x number of revolutions)	18 bit x 12 bit (262,144 x 4,096)
Error limits G	0.03 ° [1]
Repeatability standard deviation σ_r	0.002 ° [2]

[1] In accordance with DIN ISO 1319-1, position of the upper and lower error limit depends on the installation situation, specified value refers to a symmetrical position, i.e. deviation in upper and lower direction is the same.

[2] In accordance with DIN ISO 55350-13; 68.3% of the measured values are inside the specified area.

Interfaces

Communication interface	SSI
Initialization time	50 ms [1]
Position forming time	< 1 µs
Code type	Gray
Code sequence parameter adjustable	CW/CCW (V/R) parameter adjustable
Clock frequency	≤ 2 MHz [2]
Set (electronic adjustment)	H-active (L = 0 - 3 V, H = 4,0 - U_s V)

[1] Valid positional data can be read once this time has elapsed.

[2] Minimum, LOW level (Clock +): 250 ns.

CW/CCW (counting sequence when turning)	L-active (L = 0 - 1,5 V, H = 2,0 - Us V)

[1] Valid positional data can be read once this time has elapsed.
[2] Minimum, LOW level (Clock +): 250 ns.

Electronics

Connection type	Cable, 8-wire, universal, 3 m [1]
Supply voltage	4.5 ... 32 V
Power consumption	≤ 0.7 W (without load)
Reverse polarity protection	✓

[1] The universal cable connection is positioned so that it is possible to lay it without bends in a radial or axial direction.

Mechanics

Mechanical design	Through hollow shaft
Shaft diameter	8 mm
Characteristics of the shaft	Front clamp
Weight	0.2 kg [1]
Shaft material	Stainless steel
Flange material	Aluminum
Housing material	Aluminum die cast
Start up torque	< 0.8 Ncm (+20 °C)
Operating torque	< 0.6 Ncm (+20 °C)
Permissible movement static	± 0.5 mm (axial) ± 0.3 mm (radial)
Permissible movement dynamic	± 0.1 mm (axial) ± 0.05 mm (radial)
Operating speed	≤ 9,000 min^{-1} [2]
Moment of inertia of the rotor	40 gcm^2
Bearing lifetime	3.0 x 10^9 revolutions
Angular acceleration	≤ 500,000 rad/s^2

[1] Based on devices with male connector.
[2] Allow for self-heating of 3.3 K per 1,000 rpm when designing the operating temperature range.

Ambient data

EMC	According to EN 61000-6-2 and EN 61000-6-3 [1]
Enclosure rating	IP65, shaft side (IEC 60529) IP67, housing side (IEC 60529) [2]
Permissible relative humidity	90 % (Condensation not permitted)
Operating temperature range	–40 °C ... +100 °C [3]
Storage temperature range	–40 °C ... +100 °C, without package
Resistance to shocks	60 g, 6 ms (EN 60068-2-27)
Resistance to vibration	20 g, 10 Hz ... 2,000 Hz (EN 60068-2-6)

[1] EMC according to the standards quoted is achieved if shielded cables are used.
[2] For devices with male connector: with mounted mating connector.
[3] Stationary position of the cable.

Certificates

EU declaration of conformity	✓
UK declaration of conformity	✓
ACMA declaration of conformity	✓
Moroccan declaration of conformity	✓
China-RoHS	✓
cULus certificate	✓
Information according to Art. 3 of Data Act (Regulation EU 2023/2854)	✓

Classifications

ECLASS 5.0	27270502
ECLASS 5.1.4	27270502
ECLASS 6.0	27270590
ECLASS 6.2	27270590
ECLASS 7.0	27270502
ECLASS 8.0	27270502
ECLASS 8.1	27270502
ECLASS 9.0	27270502
ECLASS 10.0	27270502
ECLASS 11.0	27270502
ECLASS 12.0	27270502
ETIM 5.0	EC001486
ETIM 6.0	EC001486
ETIM 7.0	EC001486
ETIM 8.0	EC001486
UNSPSC 16.0901	41112113

Dimensional drawing

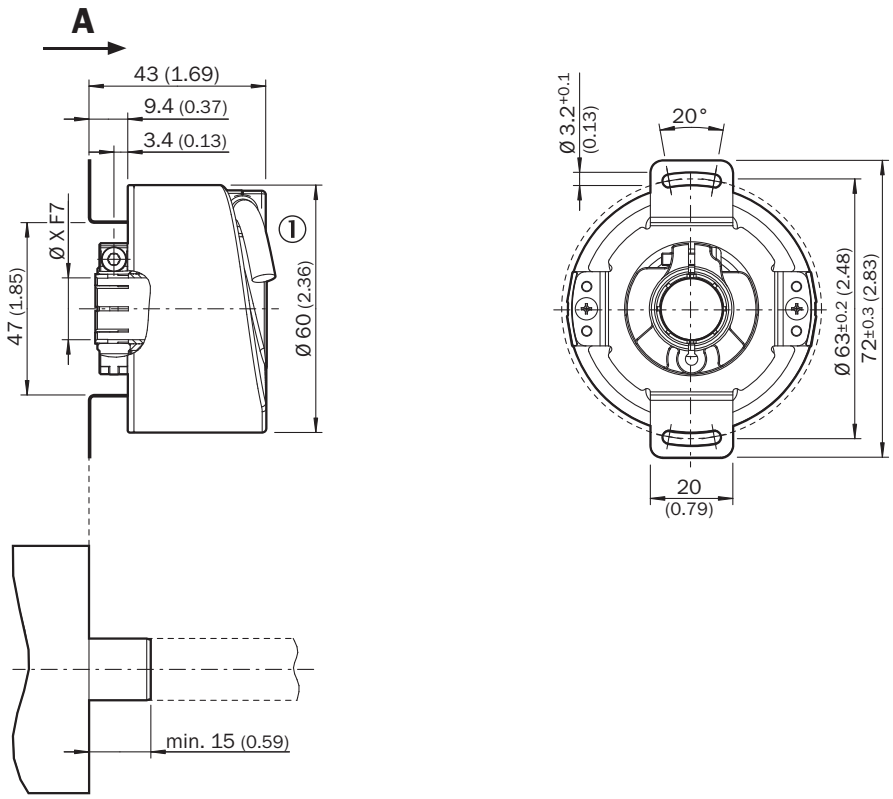

Dimensions in mm (inch)
① cable diameter = 5.6 mm +/- 0.2 mm bend radius = 30 mm

PIN assignment

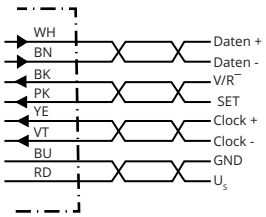

PIN	Wire colors (cable connection)	Signal	Explanation
1	Brown	Data -	Interface signals
2	White	Data +	Interface signals
3	Black	V/R	Sequence in direction of rotation
4	Pink	SET	Electronic adjustmen- tInterface signals
5	Yellow	Clock +	Interface signals
6	Purple	Clock -	Interface signals
7	Blue	GND	Ground connection
8	Red	U_S	Operating voltage

PIN	Wire colors (cable connection)	Signal	Explanation
–	–	Screen	Screen connected to housing on encoder side. Connected to ground on control side.

Diagrams

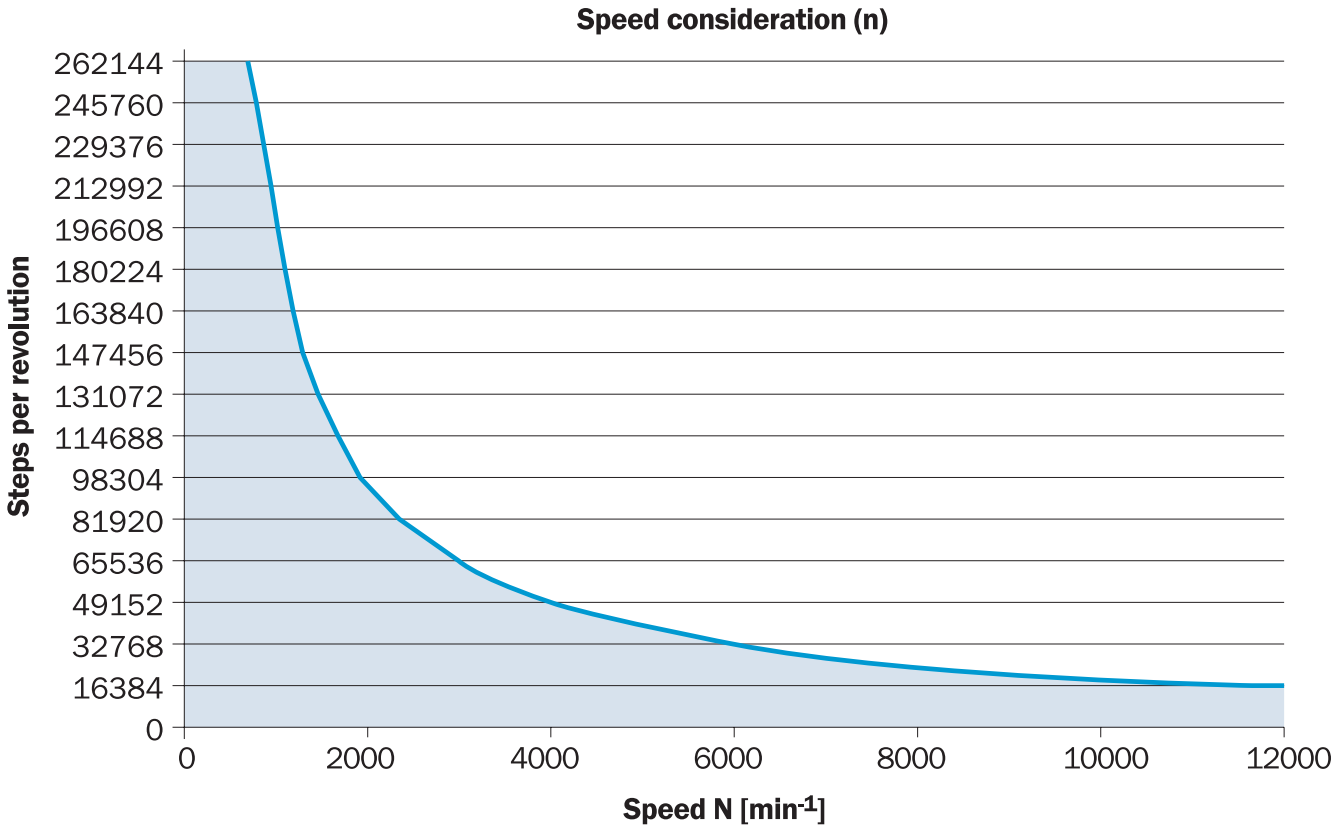

The maximum speed is also dependent on the shaft type.

Recommended accessories

Other models and accessories ➜ www.sick.com/AFS_AFM60_SSI

	Brief description	Type	part no.
connectors and cables			
	• **Connection type head A:** Male connector, M23, 12-pin, straight, A-coded • **Signal type:** HIPERFACE®, SSI, Incremental, RS-422 • **Description:** HIPERFACE®, shieldedSSIIncrementalRS-422 • **Connection systems:** Solder connection	STE-2312-G	6027537
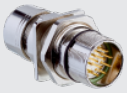	• **Connection type head A:** Male connector, M23, 12-pin, straight, A-coded • **Signal type:** HIPERFACE®, SSI, Incremental • **Description:** HIPERFACE®, shieldedSSIIncremental • **Connection systems:** Solder connection	STE-2312-GX	6028548
	• **Connection type head A:** Male connector, M23, 12-pin, straight, A-coded • **Signal type:** HIPERFACE®, SSI, Incremental • **Description:** HIPERFACE®, shieldedSSIIncremental • **Connection systems:** Solder connection	STE-2312-G01	2077273
	• **Connection type head A:** Male connector, M12, 8-pin, straight, A-coded • **Signal type:** Incremental • **Cable:** CAT5, CAT5e • **Description:** Incremental, shielded • **Connection systems:** IDC quick connection • **Permitted cross-section:** 0.14 mm² ... 0.34 mm²	STE-1208-GA01	6044892

SICK AT A GLANCE

SICK is one of the leading manufacturers of intelligent sensors and sensor solutions for industrial applications. A unique range of products and services creates the perfect basis for controlling processes securely and efficiently, protecting individuals from accidents and preventing damage to the environment.

We have extensive experience in a wide range of industries and understand their processes and requirements. With intelligent sensors, we can deliver exactly what our customers need. In application centers in Europe, Asia and North America, system solutions are tested and optimized in accordance with customer specifications. All this makes us a reliable supplier and development partner.

Comprehensive services complete our offering: SICK LifeTime Services provide support throughout the machine life cycle and ensure safety and productivity.

For us, that is “Sensor Intelligence.”

WORLDWIDE PRESENCE:

Contacts and other locations –www.sick.com