PRODUCT NR:	PCB SIZE MAX.	DIM A	DIM B	DIM C
70296-001LF	3.25	19.00	5.05	12.00
70296-002LF	2.45	18.20	4.25	11.20
70296-003LF	1.65	17.40	3.45	10.40
70296-004LF	4.05	19.80	5.85	12.80
70296-005LF	4.85	20.60	6.65	13.60
70296-006LF	5.65	21.40	7.45	14.40
70296-007LF	2.05	17.80	3.85	10.80

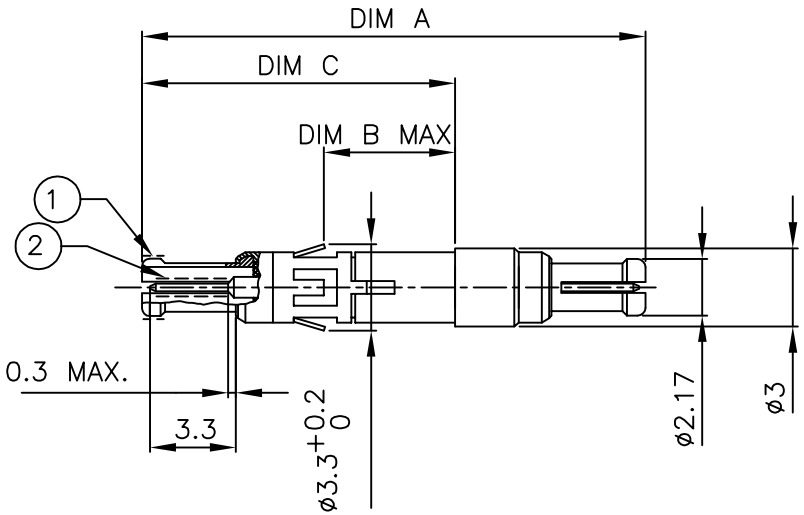

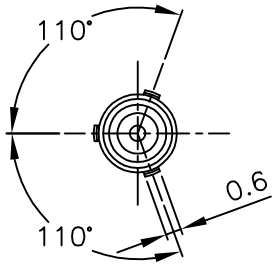

Note:
1. None toleranced dimensions are for reference only.
2. THIS PRODUCT WITH "LF" SUFFIX MEETS EURPOEAN UNIONDIRECTIVES AND OTHER COUNTRY REGULATIONS AS DESCRIBED IN GS -22-008.
3. THE PRODUCT IS NOT INTENDEDTO BE EXPOSED TO A MANUFACTURING SOLDER PROCESS.

1.27œm Au Min.
Positions 1 & 2
Plating on contact area

ltr	ecn no	dr	date
A	H10290	DAN	910813
B	H20350	DAN	920521
C	H50483	RVI	950928
D	H70488	DDB	970804
E	DG05-0372	CLu	051006

mat'l. code ----

tolerances unless otherwise specified
linear
angles

dr	D ANDREWS	910813
engr	P SCHALK	950908
chr	A v ZANTEN	910813
appd	v WOENSEL	910813

CUSTOMER COPY
projection
mm
scale 5:1

ELECTRONICS
www.fciconnect.com

title: COUPLER MINI COAX 50 Ohms
product family: METRAL(tm)
code: 213
size: A3
dwg no: 70296
sheet: 1 of 1

sheet index | revision: E | sheet: 1

Tous droits strictement reserves. Reproduction ou communication a des tiers interdite sous quelque forme que ce soit sans autorisation ecrite du propietaire. Propriete de F C I b.v. ©F C I b.v.
All rights strictly reserved. Reproduction or issue to third parties in any form whatever is not permitted without written authority from the proprietor. Property of F C I b.v. ©F C I b.v.