Data sheet

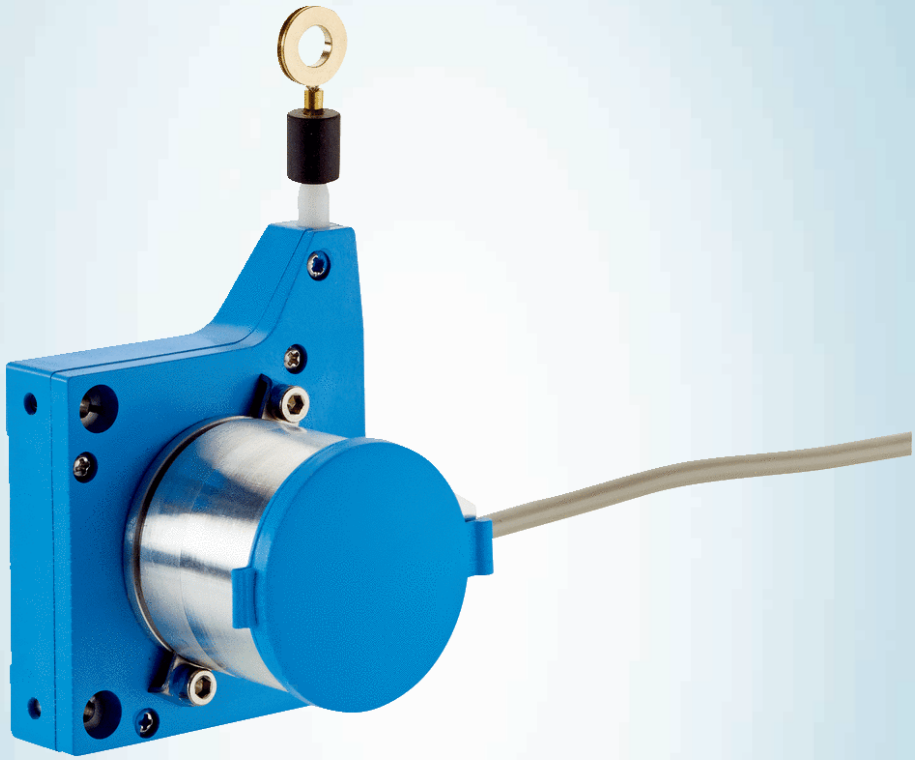

BCG05-K1KM01PP

EcoLine

WIRE DRAW ENCODERS

SICK
Sensor Intelligence.

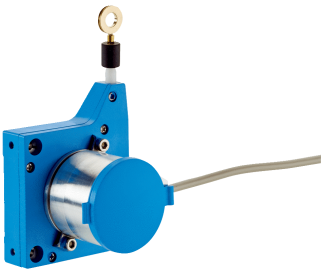

Ordering information

Type	part no.
BCG05-K1KM01PP	6039745

Included in delivery: ACM36-K1K0-K01 (1), MRA-G055-101D4 (1)

Other models and accessories → www.sick.com/EcoLine

Detailed technical data

Safety-related parameters

$MTTF_D$ (mean time to dangerous failure)	850 years (EN ISO 13849-1) [1]

[1] This product is a standard product and does not constitute a safety component as defined in the Machinery Directive. Calculation based on nominal load of components, average ambient temperature 40 °C, frequency of use 8760 h/a. All electronic failures are considered hazardous. For more information, see document no. 8015532.

Performance

Measurement range	0 m ... 1.25 m
Encoder	Absolute encoders
Resolution (wire draw + encoder)	0.05 mm [1] [2]
Repeatability	≤ 0.2 mm [3]
Linearity	≤ ± 2 mm [3]
Hysteresis	≤ 0.4 mm [3]

[1] The values shown have been rounded.

[2] Example calculation based on the BCG08 with PROFINET: 230 mm (wire draw length per revolution - see Mechanical data): 262,144 (number of steps per revolution) = 0.001 mm (resolution of wire draw + encoder combination).

[3] Value applies to wire draw mechanism.

Interfaces

Communication interface	Analog / Current / 4...20 mA

Electronics

Connection type	Cable, radial, 1.5 m
Supply voltage	19 V DC ... 33 V DC
Operating current	≤ 80 mA

Mechanics

Weight	0.18 kg

[1] These values were measred at an ambient temperature of 25 °C. There may be variations at other temperatures.

[2] Average values, which depend on the application.

[3] The service life depends on the type of load. This is influenced by environmental conditions, the installation location, the measuring range in use, the traversing speed, and acceleration.

Measuring wire material	Highly flexible stranded steel 1,4401 stainless steel V4A/PA 12-sheathed
Measuring wire diameter	0.45 mm
Weight (measuring wire)	0.58 g/m
Housing material, wire draw mechanism	Plastic, Noryl
Spring return force	1 N ... 1.4 N [1]
Length of wire pulled out per revolution	150 mm
Life of wire draw mechanism	Typ. 1,000,000 cycles [2] [3]
Actual wire draw length	1.45 m
Wire acceleration	10 m/s²
Operating speed	6 m/s
Mounted encoder	ACM36, ACM36-K1K0-K01, 6039751
Mounted mechanic	MRA-G055-101D4, 5324019

[1] These values were measred at an ambient temperature of 25 °C. There may be variations at other temperatures.

[2] Average values, which depend on the application.

[3] The service life depends on the type of load. This is influenced by environmental conditions, the installation location, the measuring range in use, the traversing speed, and acceleration.

Ambient data

EMC	According to EN 61000-6-2 and EN 61000-6-4
Enclosure rating	IP50, mounted mechanic IP65, Encoder
Operating temperature range	–30 °C ... +70 °C

Certificates

EU declaration of conformity	✓
UK declaration of conformity	✓
ACMA declaration of conformity	✓
Moroccan declaration of conformity	✓
China-RoHS	✓

Classifications

ECLASS 5.0	27270590
ECLASS 5.1.4	27270590
ECLASS 6.0	27270590
ECLASS 6.2	27270590
ECLASS 7.0	27270590
ECLASS 8.0	27270590
ECLASS 8.1	27270590
ECLASS 9.0	27270590
ECLASS 10.0	27270613
ECLASS 11.0	27270503
ECLASS 12.0	27270503
ETIM 5.0	EC001486
ETIM 6.0	EC001486
ETIM 7.0	EC001486

ETIM 8.0	EC001486
UNSPSC 16.0901	41112113

Dimensional drawing

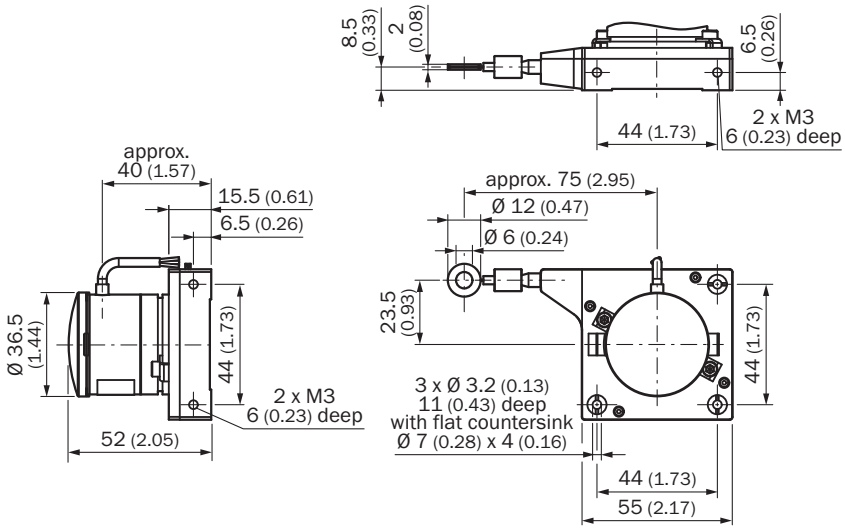

Dimensions in mm (inch)

PIN assignment

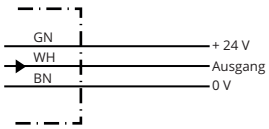

Color	Signal
Green	+ 24 V
White	Output
Brown	0 V

Diagrams Multiturn, current output

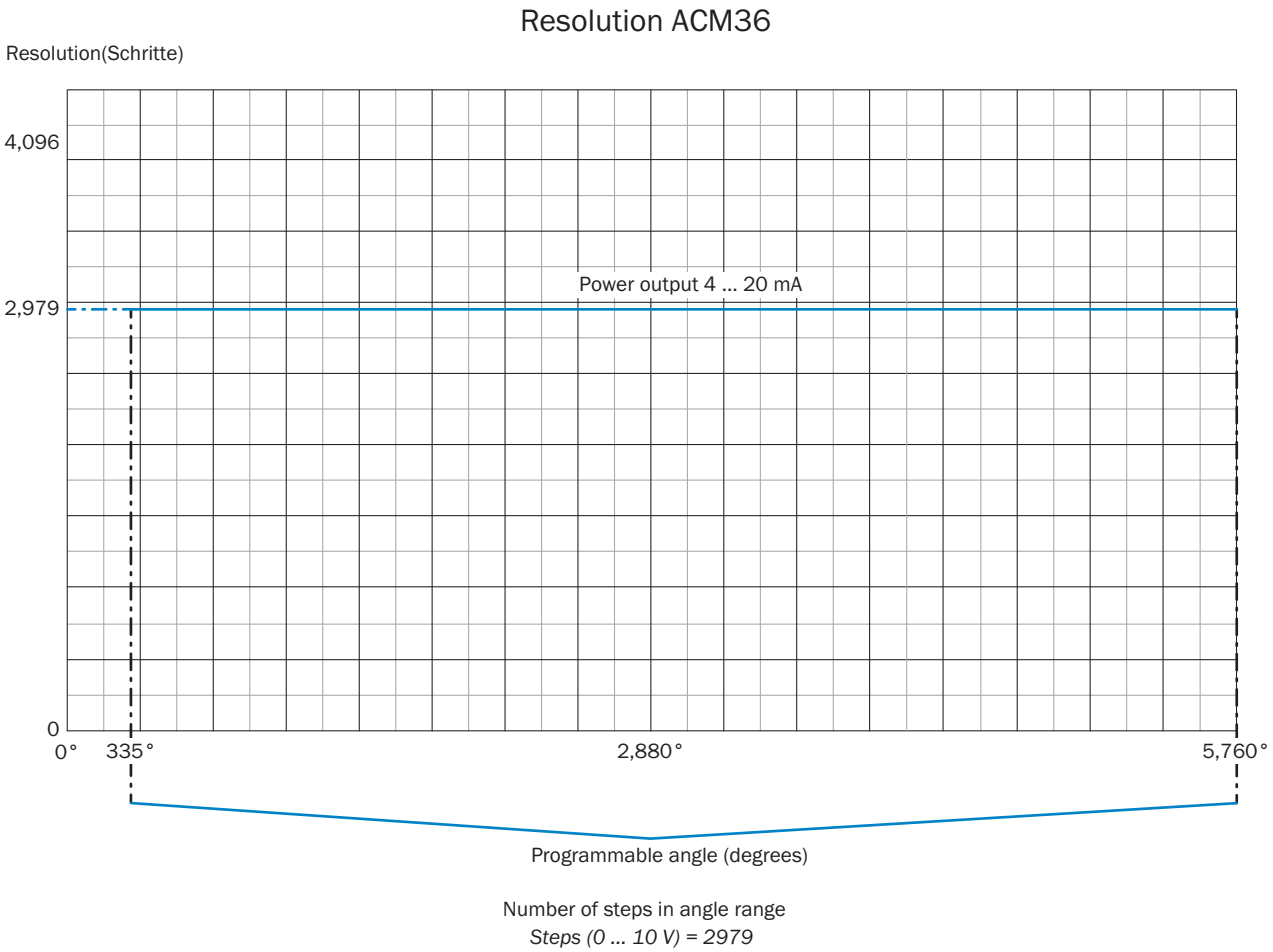

Configured range (α) must be at least 10°

Recommended accessories

Other models and accessories ➜ www.sick.com/EcoLine

	Brief description	Type	part no.
Wire draw mechanism			
	• **Product segment:** Wire draw mechanism • **Product family:** Wire draw mechanism for wire draw encoders • **Description:** EcoLine wire draw mechanism for servo flange with 6 mm shaft, measuring range 0 m ... 1.25 m • **Items supplied:** Without encoder, 2 x fixing clamp (0061W01-00:21), 2 x fixing screw (DIN912-M3x6), 1 x Woodruff key DIN 6888 2x2.6	MRA-G055-101D4	5324019

SICK AT A GLANCE

SICK is one of the leading manufacturers of intelligent sensors and sensor solutions for industrial applications. A unique range of products and services creates the perfect basis for controlling processes securely and efficiently, protecting individuals from accidents and preventing damage to the environment.

We have extensive experience in a wide range of industries and understand their processes and requirements. With intelligent sensors, we can deliver exactly what our customers need. In application centers in Europe, Asia and North America, system solutions are tested and optimized in accordance with customer specifications. All this makes us a reliable supplier and development partner.

Comprehensive services complete our offering: SICK LifeTime Services provide support throughout the machine life cycle and ensure safety and productivity.

For us, that is “Sensor Intelligence.”

WORLDWIDE PRESENCE:

Contacts and other locations –www.sick.com