High Efficiency 3 A Synchronous Buck Dual LED Driver with Integrated High Side Switch and Current Sensing for Automotive Front Lighting

NCV78825



SSOP36 EP
CASE 940AB

MARKING DIAGRAM

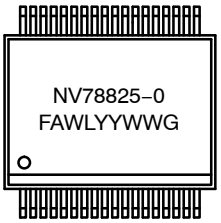

F	= Fab Site
A	= Assembly Location
WL	= Wafer Lot
YY	= Year
WW	= Work Week
G	= Pb−Free Package

ORDERING INFORMATION

See detailed ordering and shipping information on page 2 of this data sheet.

Description

The NCV78825 is a single−chip and high efficient Synchronous Buck Dual LED Driver designed for automotive front lighting applications like high beam, low beam, DRL (daytime running light), turn indicator, fog light, static cornering, etc. The NCV78825 is in particular designed for high current LEDs and provides a complete solution to drive 2 LED strings of up−to 60 V. It includes 2 independent current regulators for the LED strings and required diagnostic features for automotive front lighting with a minimum of external components – the chip doesn't need any external sense resistor for the buck current regulation. The available output current and voltages can be customized per individual LED string. When more than 2 LED channels are required on 1 module, then 2, 3 or more devices NCV78825 can be combined; also with NCV787x3 devices – the predecessor of the NCV78825. Thanks to the SPI programmability, one single hardware configuration can support various application platforms.

Features

- Single Chip
- Buck Topology
- 2 LED Strings up−to 60 V
- High Current Capability up to 3 A DC per Output
- Integrated High Side Switch
- Low Side Pre−driver for External NMOS Device
- High Overall Efficiency
- Minimum of External Components
- Integrated High Accuracy Current Sensing
- Integrated Switched Mode Buck Current Regulator
- Average Current Regulation Through the LEDs
- High Operating Frequencies to Reduce Inductor Sizes
- Low EMC Emission for LED Switching and Dimming
- SPI Interface for Dynamic Control of System Parameters
- Fail Safe Operating (FSO) Mode, Stand−Alone Mode
- Master−Slave Synchronization Mode of the Buck Channels
- NCV Prefix for Automotive and Other Applications Requiring Unique Site and Control Change Requirements; AEC−Q100 Qualified and PPAP Capable
- This is a Pb−Free Device

Typical Applications

- High Beam
- Low Beam
- DRL
- Position or Park Light
- Turn Indicator
- Fog
- Static Cornering

© Semiconductor Components Industries, LLC, 2017

ORDERING INFORMATION

Table 1. AVAILABLE PART NUMBERS

Device	Marking	Package*	Shipping†
NCV78825DQ0R2G	NV78825−0	SSOP36 EP (Pb − Free)	1500 / Tape & Reel
NCV78825DQ0AR2G**	NV78825−0	SSOP36 EP (Pb − Free)	1500 / Tape & Reel

*For additional information on our Pb−Free strategy and soldering details, please download the **onsemi** Soldering and Mounting Techniques Reference Manual, SOLDERRM/D.
**NCV78825DQ0AR2G is recommended for new designs.
†For information on tape and reel specifications, including part orientation and tape sizes, please refer to our Tape and Reel Packaging Specification Brochure, BRD8011/D.

TYPICAL APPLICATION SCHEMATIC

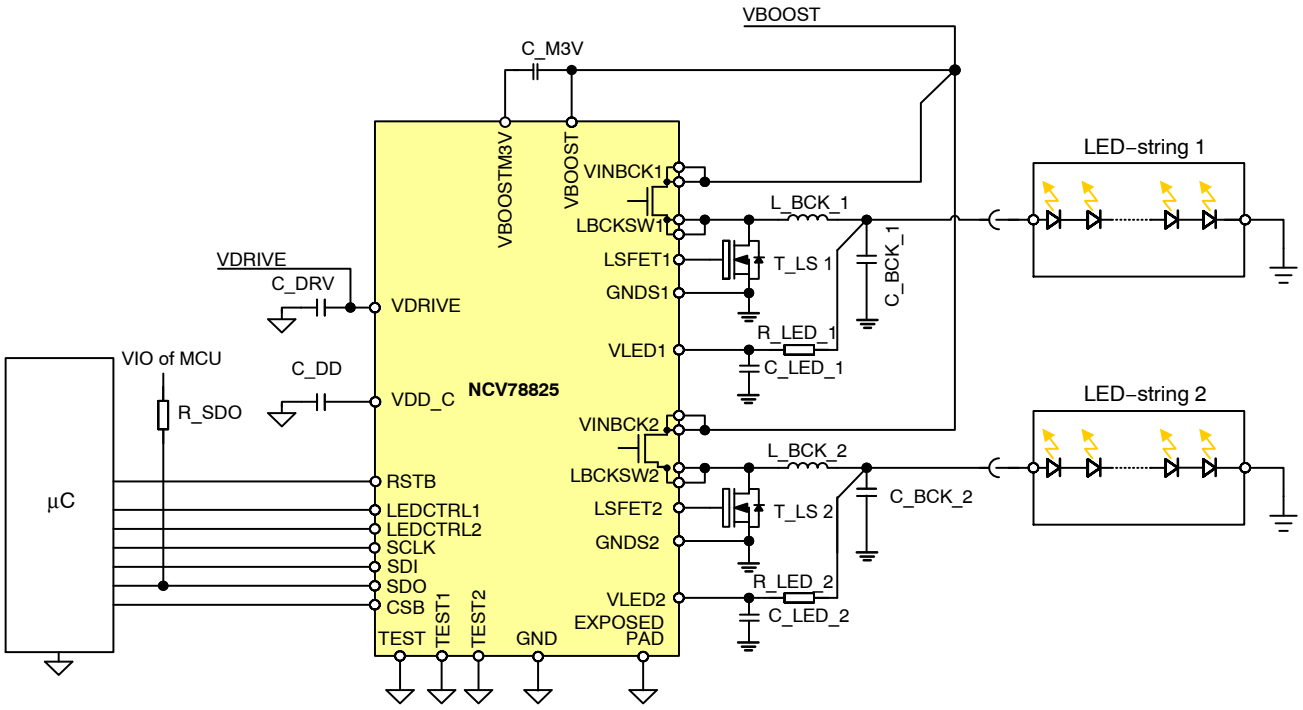

Figure 1. Typical Application Schematic

Table 2. EXTERNAL COMPONENTS

Component	Function	Typ. Value	Unit
L_BCK_x	Buck regulator coil (see BUCK REGULATOR chapter for details)	47 (22)	μH
C_BCK_x	Buck regulator output capacitor (see BUCK REGULATOR chapter for details)	220	nF
C_M3V	Capacitor for M3V regulator	470 (see Table 8)	nF
C_DD	V_{DD} decoupling capacitor	470 (see Table 7)	nF
C_DRV	V_{DRIVE} decoupling capacitor	470	nF
C_LED_x	Optional VLEDx pin filter capacitor (Note 2)	1	nF
R_LED_x	VLEDx pin serial resistor (Notes 2 and 3)	1	kΩ
R_SDO	SPI pull−up resistor	1	kΩ
T_LSx	Buck regulator low side switch (LS FET)	NVTFS5C680NL, NVMFS5C673NL	

1. Pin TEST has to be connected to ground. TEST1 and TEST2 pins can be connected to ground or left floating.
2. C_LED_x is optional. If used, time constant of the C_LED_x and R_LED_x filter has to be lower than minimal LEDCTRLx PWM time for proper VLED measurement.
3. R_LED_x is necessary to ensure Absolute maximum ratings of IVLEDx current (see Table 4).
4. GNDSx pins have to be star connections to the corresponding S of the external LS FET.

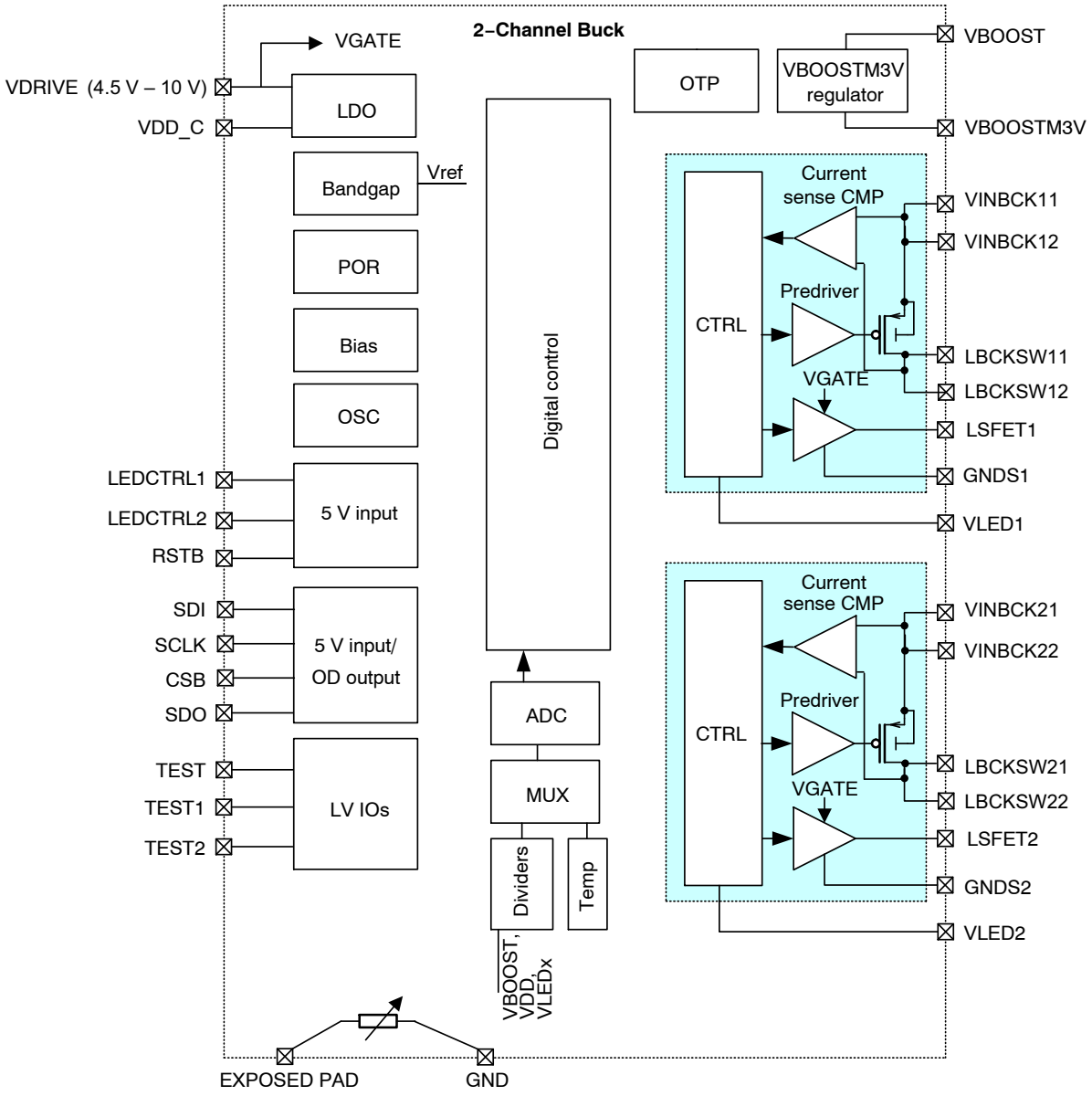

Figure 2. Block Diagram

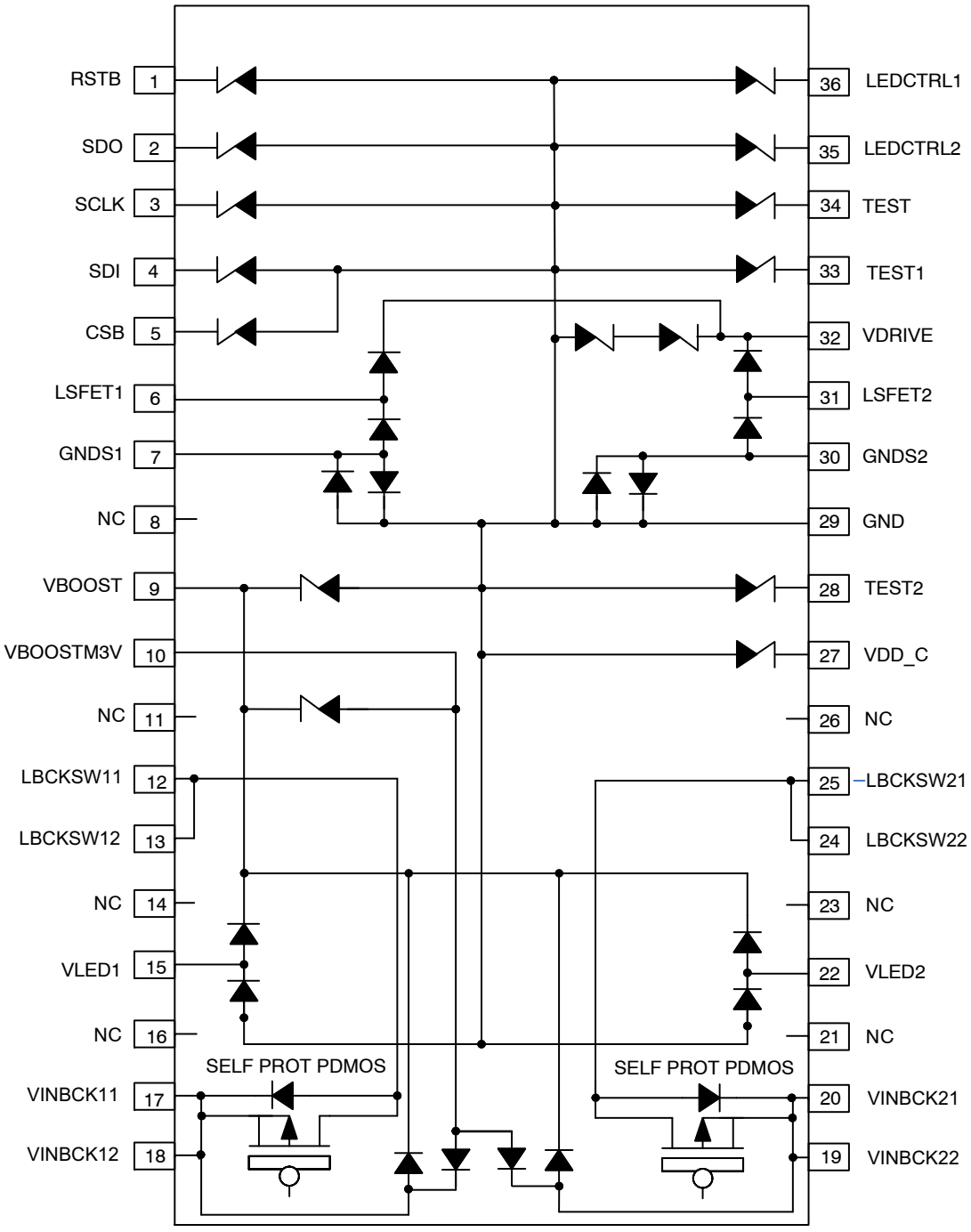

Figure 3. ESD Schematic

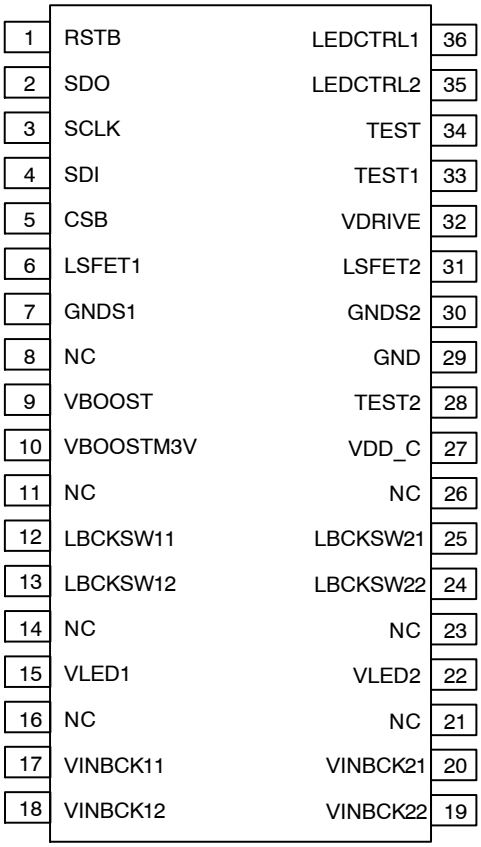

Figure 4. Pin Connections − SSOP36−EP (Top View)

Table 3. PIN DESCRIPTION

Pin No. SSOP36−EP	Pin Name	Description	I/O Type
VBOOST Supply Voltage 1	RSTB	External reset signal	MV in
2	SDO	SPI data output	MV open−drain
3	SCLK	SPI clock	MV in
4	SDI	SPI data input	MV in
5	CSB	SPI chip select (chip select bar)	MV in
6	LSFET1	Buck 1 driver output for ext. low side switch	MV out
7	GNDS1	Buck 1 ground sense for ext. low side switch	MV out
8, 11, 14, 16, 21, 23, 26	GND/NC	GND/NC connection in application	NC
9	VBOOST	Booster input voltage pin	HV supply
10	VBOOSTM3V	VBOOSTM3V regulator output pin	HV out (supply)
12	LBCKSW11	Buck 1 switch output	HV out
13	LBCKSW12	Buck 1 switch output	HV out
15	VLED1	LED String 1 Forward Voltage Sense Input	HV in
17	VINBCK11	Buck 1 high voltage supply	HV supply
18	VINBCK12	Buck 1 high voltage supply	HV supply
19	VINBCK22	Buck 2 high voltage supply	HV supply
20	VINBCK21	Buck 2 high voltage supply	HV supply
22	VLED2	LED String 2 Forward Voltage Sense Input	HV in
24	LBCKSW22	Buck 2 switch output	HV out

Table 3. PIN DESCRIPTION (continued)

Pin No. SSOP36−EP	Pin Name	Description	I/O Type
25	LBCKSW21	Buck 2 switch output	HV out
27	VDD_C	3.3 V logic supply	LV supply
28	TEST2	Internal function. To be tied to GND or left open	LV in/out
29	GND	Ground	Ground
30	GNDS2	Buck 2 ground sense for ext. low side switch	MV out
31	LSFET2	Buck 2 driver output for ext. low side switch	MV out
32	VDRIVE	Pre−driver supply	MV supply
33	TEST1	Internal function. To be tied to GND or left open	LV in/out
34	TEST	Internal function. To be tied to GND	LV in
35	LEDCTRL2	LED string 2 enable	MV in
36	LEDCTRL1	LED string 1 enable	MV in
EP	EXPOSED PAD	To be tied to GND	

Table 4. ABSOLUTE MAXIMUM RATINGS

Characteristic	Symbol	Min	Max	Unit
VBOOST Supply Voltage	V_{BOOST}	−0.3	68	V
VINBCKx Supply Voltage (Note 1)	VINBCKx	Max of VBOOSTM3V − 0.3, −0.3	Min of V_{BOOST} + 0.3, 68	V
VBOOSTM3V Supply Voltage (Note 2)	VBOOSTM3V	Max of V_{BOOST} − 3.6, −0.3	Min of V_{BOOST} + 0.3, 68	V
VDRIVE Supply Voltage	VDRIVE	−0.3	12	V
LSFETx Voltage (Note 3)	LSFETx	−0.3	Min of VDRIVE + 0.3, 12	V
VLED Sense Voltage	VLEDx	−0.3	Min of V_{BOOST} + 0.3, 68	V
Logic Supply Voltage (Note 4)	V_{DD}	−0.3	3.6	V
Medium Voltage IO Pins	IOMV	−0.3	7.0	V
Test Pins (Note 5)	TESTx	−0.3	Min of V_{DD} + 0.3, 3.6	V
Buck Switch Low Side (Note 1)	LBCKSWx	−2	VINBCKx + 0.3	V
VLED Sink/source Current	IVLEDx	−30	30	mA
Storage Temperature (Note 6)	T_{STRG}	−50	150	°C
The Exposed Pad (Note 7)	EXPAD	GND − 0.3	GND + 0.3	V
The LS Pre−driver Sense GND Voltage	GNDSx	GND − 0.3	GND + 0.3	V
Electrostatic Discharge on Component Level Human Body Model (Note 8)	V_{ESD_HBM}	−2	+2	kV
Electrostatic Discharge on Component Level Charge Device Model (Note 8)	V_{ESD_CDM}	−500	+500	V

Stresses exceeding those listed in the Maximum Ratings table may damage the device. If any of these limits are exceeded, device functionality should not be assumed, damage may occur and reliability may be affected.

1. V(VINBCKx − LBCKSWx) < 70 V, the driver in off state.
2. The VBOOSTM3V regulator in off state.
3. The LSFETx driver in HiZ state.
4. Absolute maximum rating for pins: VDD, TEST. Also valid for relative difference VBOOST − VBOOSTM3V.
5. Absolute maximum rating for pins: TEST1, TEST2.
6. For limited time up to 100 hours. Otherwise the max storage temperature is 85°C.
7. The exposed pad must be hard wired to GND pin in the application to ensure both electrical and thermal connection.
8. This device series incorporates ESD protection and is tested by the following methods:
   ESD Human Body Model tested per AEC − Q100 − 002 (EIA−JESD22 − A114−B)
   ESD Charge Device Model tested per EIA−JESD22 − C101
   Latch − up Current Maximum Rating: ≤ 100 mA per JEDEC standard: JESD78

Operating ranges define the limits for functional operation and parametric characteristics of the device. A mission profile (Note 1) is a substantial part of the operation conditions; hence the Customer must contact ON Semiconductor in order to mutually agree in writing on the allowed missions profile(s) in the application.

Table 5. RECOMMENDED OPERATING RANGES

Characteristic	Symbol	Min	Typ	Max	Unit
Boost Supply Voltage	V_{BOOST}	6		67	V
VINBCKx Supply Voltage (Note 2)	VINBCKx	V_{BOOST} − 0.1	V_{BOOST}	V_{BOOST} + 0.1	V
VDRIVE Voltage Supply	VDRIVE	4.5		10	V
Buck Switch Peak Output Current	I_LBCKSW			3.8	A
Functional Operating Junction Temperature Range (Note 3)	T_{JF}	−40		155	°C
Parametric Operating Junction Temperature Range (Note 4)	T_{JP}	−40		150	°C
The Exposed Pad Connection (Note 5)	EXPOSED_PAD	GND − 0.1	GND	GND + 0.1	V
The LS Pre−driver Sense GND Voltage (Note 6)	GNDSx	GND − 0.1	GND	GND + 0.1	mV

Functional operation above the stresses listed in the Recommended Operating Ranges is not implied. Extended exposure to stresses beyond the Recommended Operating Ranges limits may affect device reliability.

1. A mission profile describes the application specific conditions such as, but not limited to, the cumulative operating conditions over life time, the system power dissipation, the system's environmental conditions, the thermal design of the customer's system, the modes, in which the device is operated by the customer, etc. No more than 100 cumulated hours in life time above T_{tw}.
2. Hard connection of VINBCKx to VBOOST on PCB.
3. The circuit functionality is not guaranteed outside the functional operating junction temperature range. Also please note that the device is verified on bench for operation up to 170°C but that the production test guarantees 155°C only.
4. The parametric characteristics of the circuit are not guaranteed outside the Parametric operating junction temperature range.
5. The exposed pad must be hard wired to GND pin in an application to ensure both electrical and thermal connection.
6. The hard connection of the GNDSx pins on the PCB, mainly to the S of the LS NMOS device the voltage difference between the pin and corresponding S of the LS NMOS max +/− 0.2 mV.

Table 6. THERMAL RESISTANCE

Characteristic	Package	Symbol	Min	Typ	Max	Unit
Thermal Resistance Junction to Exposed Pad (Note 1)	SSOP36−EP	Rthjp	−	3.5	−	°C/W

1. Includes also typical solder thickness under the Exposed Pad (EP).

ELECTRICAL CHARACTERISTICS

Table 7. VDD: 3.3 V LOW VOLTAGE ANALOG AND DIGITAL SUPPLY

Characteristic	Symbol	Conditions	Min	Typ	Max	Unit
The Regulator Output Voltage	VDD		3.05	3.45	3.6	V
VDD External Decoupling Cap	C_DD		0.3	0.47	2.2	μF
The VDRIVE Current Consumption (Note 2)	I_VDRIVE			8	15	mA
Output Current Limitation	VDD_ILIM		15		160	mA
POR Toggle Level on VDD Rising	POR_{3V_H}		2.7		3.05	V
POR Toggle Level on VDD Falling	POR_{3V_L}		2.45		2.8	V
POR Hysteresis	POR_{3V_HYST}		0.01	0.2	0.75	V
OTP UV Toggle Level on VBOOST	OTP_UV		13		15	V
OTP UV Toggle Level Hysteresis	OTP_UV_HYST		0.01	0.2	0.75	V

1. All Min and Max parameters are guaranteed over full junction temperature (T_{JP}) range (−40 °C; 150 °C), unless otherwise specified.
2. Only internal consumption, Excluding LS NMOS gate charge current.

Table 8. VBOOSTM3V: HIGH SIDE AUXILIARY SUPPLY

Characteristic	Symbol	Conditions	Min	Typ	Max	Unit
VBOOSTM3V Regulator Output Voltage	V_{BSTM3V}	Referenced to VBOOST	−3.6	−3.3	−3.0	V
DC Output Current Capability (Note 1)	M3V_IOUT			7.5	42	mA
Output Current Limitation	M3V_ILIM				300	mA
VBOOSTM3V External Decoupling Cap	C_M3V	Referenced to VBOOST	0.1	0.47	2.2	μF
VBOOSTM3V Ext. Decoupling Cap. ESR	C_M3V_ESR	Referenced to VBOOST			200	mΩ
VBSTM3V POR Level, Falling Edge	M3V_PORL	Referenced to VBOOST	−2.7		−1.8	V
VBSTM3V POR Level, Rising Edge	M3V_PORH	Referenced to VBOOST	−2.4		−1.8	V
VBSTM3V POR Level Hysteresis	M3V_PORHYST			0.05		V
VBOOST POR Level	M3V_VBSTPOR	VBOOST goes down	3.5		5.5	V

1. VBOOST = 68 V, f_{BUCK} = 2 MHz, maximum total gate charge for both activated BUCK channels Qgate = 20 nC

Table 9. OSC10M: SYSTEM OSCILLATOR CLOCK

Characteristic	Symbol	Conditions	Min	Typ	Max	Unit
System Oscillator Frequency	FOSC10M		8	10	12	MHz

Table 10. ADC FOR MEASURING VBOOST, VDD, VLED1, VLED2, TEMP

Characteristic	Symbol	Conditions	Min	Typ	Max	Unit
ADC Resolution	ADC_RES			8		Bits
Integral Nonlinearity (INL)	ADC_INL	Best fitting straight line method	−1.5		1.5	LSB
Differential Nonlinearity (DNL)	ADC_DNL	Best fitting straight line method	−2		2	LSB
Full Path Gain Error for Measurements of VLEDx, VBOOST	ADC_GE		−3.25		3.25	%
Offset at Output of ADC	ADC_OFFS		−2		2	LSB
Time for 1 SAR Conversion	ADC_CONV	Full conversion of 8 bits	6.67	8	10	μs
ADC Full Scale for VDD Measurement	ADCFS_VDD		3.87	4	4.13	V
ADC Full Scale for VLEDx Measurement	ADCFS_VLED00	The VLED range code is “00”	67.725	70	72.275	V
ADC Full Scale for VLEDx Measurement	ADCFS_VLED01	The VLED range code is “01”	48.375	50	51.625	V
ADC Full Scale for VLEDx Measurement	ADCFS_VLED10	The VLED range code is “10”	38.700	40	41.300	V

Table 10. ADC FOR MEASURING VBOOST, VDD, VLED1, VLED2, TEMP (continued)

Characteristic	Symbol	Conditions	Min	Typ	Max	Unit
ADC Full Scale for VLEDx Measurement	ADCFS_VLED11	The VLED range code is “11”	29.025	30	30.975	V
ADC Full Scale for VBOOST Measurement	ADCFS_VBST		67.725	70	72.275	V
TSD Threshold Level	ADC_TSD	ADC measurement of junction temperature	163	169	175	°C
Temperature measurement accuracy at hot	ADC_TEMP_H	T = 155°C	−7		7	°C
Temperature measurement accuracy at cold	ADC_TEMP_C	T = −40°C	−15		15	°C
VLED Input Impedance	VLED_RES		280		790	kΩ

Table 11. BUCK REGULATOR – SWITCH

Characteristic	Symbol	Conditions	Min	Typ	Max	Unit
On Resistance, Range 1	$R_{ON}1$	At room−temperature, I(VINBCKx) = 0.18 A, V(BOOST − VINBCKx) ≤ × 0.2 V			7.36	Ω
On Resistance at Hot, Range 1	$R_{ON}1_H$	At Tj = 160 °C, I(VINBCKx) = 0.18 A, V(BOOST − VINBCKx) ≤ × 0.2 V		6.3	10.2	Ω
On Resistance, Range 2	$R_{ON}2$	At room−temperature, I(VINBCKx) = 0.375 A, V(BOOST − VINBCKx) ≤ ×0.2 V			3.68	Ω
On Resistance at Hot, Range 2	$R_{ON}2_H$	At Tj = 160 °C, I(VINBCKx) = 0.375 A, V(BOOST − VINBCKx) ≤ ×0.2 V		3.2	5.12	Ω
On Resistance, Range 3	$R_{ON}3$	At room−temperature, I(VINBCKx) = 0.75 A, V(BOOST − VINBCKx) ≤ ×0.2 V			1.84	Ω
On Resistance at Hot, Range 3	$R_{ON}3_H$	At Tj = 160 °C, I(VINBCKx) = 0.75 A, V(BOOST − VINBCKx) ≤ ×0.2 V		1.7	2.56	Ω
On Resistance, Range 4	$R_{ON}4$	At room−temperature, I(VINBCKx) = 1.5 A, V(BOOST − VINBCKx) ≤ ×0.2 V			0.92	Ω
On Resistance at Hot, Range 4	$R_{ON}4_H$	At Tj = 160 °C, I(VINBCKx) = 1.5 A, V(BOOST − VINBCKx) ≤ ×0.2 V		0.9	1.28	Ω
On Resistance, Range 5	$R_{ON}5$	At room−temperature, I(VINBCKx) = 3 A, V(BOOST − VINBCKx) ≤ ×0.2 V			0.46	Ω
On Resistance at Hot, Range 5	$R_{ON}5_H$	At Tj = 160 °C, I(VINBCKx) = 3 A, V(BOOST − VINBCKx) ≤ ×0.2 V		0.5	0.64	Ω
Switching Slope − ON Phase	TRISE	Normal mode (DRV_SLOW_EN = “0”)		3		V/ns
Switching Slope − OFF Phase (Note 22)	TFALL	Normal mode (DRV_SLOW_EN = “0”)		3		V/ns
Switching Slope − ON Phase	TRISE_SL	Slow mode (DRV_SLOW_EN = “1”)		1.5		V/ns
Switching Slope − OFF Phase (Note 22)	TFALL_SL	Slow mode (DRV_SLOW_EN = “1”)		1.5		V/ns

1. Falling switching slope depends on used current (range, current sense threshold level) and LBCKSWx node capacitance.

Table 12. BUCK REGULATOR – CURRENT REGULATION

Characteristic	Symbol	Conditions	Min	Typ	Max	Unit
Current Sense Threshold Level, Range 1, Min Value	ITHR1_000	[BUCKx_VTHR = 000000000] end of the BUCK ON−phase	23.40	29.30	35.20	mA
Current Sense Threshold Level, Range 1, Spec. Value	ITHR1_219	[BUCKx_VTHR = 011011011] end of the BUCK ON−phase Min. value for specified precision		117.19		mA
Current Sense Threshold Level, Range 1, Max Value	ITHR1_511	[BUCKx_VTHR = 111111111] end of the BUCK ON−phase		234.38		mA
Current Sense Threshold Level, Range 2, Min Value	ITHR2_000	[BUCKx_VTHR = 000000000] end of the BUCK ON−phase	46.90	58.59	70.30	mA

Table 12. BUCK REGULATOR – CURRENT REGULATION (continued)

Characteristic	Symbol	Conditions	Min	Typ	Max	Unit
Current Sense Threshold Level, Range 2, Spec. Value	ITHR2_219	[BUCKx_VTHR = 011011011] end of the BUCK ON−phase. Min. value for specified precision		234.38		mA
Current Sense Threshold Level, Range 2, Max Value	ITHR2_511	[BUCKx_VTHR = 111111111] end of the BUCK ON−phase		468.75		mA
Current Sense Threshold Level, Range 3, Min Value	ITHR3_000	[BUCKx_VTHR = 000000000] end of the BUCK ON−phase	93.80	117.19	140.60	mA
Current Sense Threshold Level, Range 3, Spec. Value	ITHR3_219	[BUCKx_VTHR = 011011011] end of the BUCK ON−phase Min. value for specified precision		468.75		mA
Current Sense Threshold Level, Range 3, Max Value	ITHR3_511	[BUCKx_VTHR = 111111111] end of the BUCK ON−phase		937.5		mA
Current Sense Threshold Level, Range 4, Min Value	ITHR4_000	[BUCKx_VTHR = 000000000] end of the BUCK ON−phase	187.50	234.38	281.30	mA
Current Sense Threshold Level, Range 4, Spec. Value	ITHR4_219	[BUCKx_VTHR = 011011011] end of the BUCK ON−phase Min. value for specified precision		937.5		mA
Current Sense Threshold Level, Range 4, Max Value	ITHR4_511	[BUCKx_VTHR = 111111111] end of the BUCK ON−phase		1875		mA
Current Sense Threshold Level, Range 5, Min Value	ITHR5_000	[BUCKx_VTHR = 000000000] end of the BUCK ON−phase	375.00	468.75	562.50	mA
Current Sense Threshold Level, Range 5, Spec. Value	ITHR5_219	[BUCKx_VTHR = 011011011] end of the BUCK ON−phase Min. value for specified precision		1875		mA
Current Sense Threshold Level, Range 5, Max Value	ITHR5_511	[BUCKx_VTHR = 111111111] end of the BUCK ON−phase		3750		mA
Current Sense Threshold Increase per Code, Range 1	δITHR1	9 bit, linear increase		0.40		mA
Current Sense Threshold Increase per Code, Range 2	δITHR2	9 bit, linear increase		0.80		mA
Current Sense Threshold Increase per Code, Range 3	δITHR3	9 bit, linear increase		1.61		mA
Current Sense Threshold Increase per Code, Range 4	δITHR4	9 bit, linear increase		3.21		mA
Current Sense Threshold Increase per Code, Range 5	δITHR5	9 bit, linear increase		6.42		mA
Current Threshold Accuracy Only with Trimming Constant for Range 5 (Note 23)	ITHR_ERR_DD	Specified for BUCKx_VTHR ≥ 011011011, without the delta of the trimming code and without temp. compensation	−9		+9	%
Current Threshold Accuracy without Temperature Compensation (Note 23)	ITHR_ERR_D	Specified for BUCKx_VTHR ≥ 011011011, with the delta of the trimming code and without temp. compensation	−7		+7	%
Current Threshold Accuracy (Note 23)	ITHR_ERR	Specified for BUCKx_VTHR ≥ 011011011, the delta of the trimming code and temp. compensation	−4		+4	%
Offset of Peak Current Comparator	CMP_OFFSET	BUCKx_OFF_CMP_DIS = 1	−10		+10	mV
Over−current Detection Level, Range1	OCDR1		305			mA
Over−current Detection Level, Range2	OCDR2		609			mA
Over−current Detection Level, Range3	OCDR3		1219			mA

Table 12. BUCK REGULATOR – CURRENT REGULATION (continued)

Characteristic	Symbol	Conditions	Min	Typ	Max	Unit
Over−current Detection Level, Range4	OCDR4		2437			mA
Over−current Detection Level, Range5	OCDR5		4875			mA
Time Constant for Longest Off Time	TC_00	[BUCKx_TOFF = 00000]		50		μs × V
Time Constant for Shortest Off Time	TC_31	[BUCKx_TOFF = 11111]		5		μs × V
TOFF Time Relative Error with Temperature Compensation	TOFF_ERRW	TC = Toff × VCOIL @ VLED > 2 V, Toff > 350 ns, Toff temperature dependency relative to Thot = 155°C, see Figure 8	−10		+10	%
TOFF Time Relative Error	TOFF_ERR	TC = Toff × VCOIL @ VLED > 2 V, Toff > 350 ns	−15		+15	%
TOFF Time Absolute Error	TOFF_ERR_ABS	TC = Toff × VCOIL @ VLED > 2 V, Toff ≤ × 350 ns	−35		+35	ns
Time Constant Decrease per Code	δTC	5 bits, exponential decrease		7.16		%
Detection Level of VLED to be too Low	VLED_LMT		1.62	1.8	1.98	V
Zero−cross−detection Threshold Level	TC_ZCD		−2.8	−1.2	−0.2	mV
Zero−cross−detection Filter Time	TC_ZCD_FT		20		80	ns
HS Overvoltage Detection Threshold Level	OVD_THR	LBCKSWx−VINBCKx, rising edge	100		200	mV
HS Overvoltage Detection Filter Time	OVD_FT				100	ns
HS Gate Voltage Detection Threshold Level	HSVT_THR			0.6		V
HS Gate Voltage Detection Filter Time	HSVT_FT				45	ns
OpenLEDx Detection Time	TON_OPEN		40	50	60	μs
Buck Minimum TON Time	TON_MIN	For VINBCKx − LBCKSWx < 2.4 V, no failure at LBCKSWx pin	50		250	ns
Delay from BUCKx ISENS Comparator Input Voltage Balance to BUCKx Switch Going OFF	ISENSCMP_DEL	ISENS cmp. over−drive ramp > 1 mV/10 ns, for Slope = 1.25 A/μs, @125°C		45		ns

1. Measured as comparator DC threshold value, without comparator delay and switch falling slope.

Table 13. BUCK REGULATOR – LS SWITCH PRE−DRIVER

Characteristic	Symbol	Conditions	Min	Typ	Max	Unit
Top Switch Ron	Ront			40		Ω
Bottom Switch Ron	Ronb			8		Ω
The Pull Down Resistor	LS_PUD			10		kΩ
LS FET Gate Voltage Threshold Level	LS_VT	Comparator level for non−overlap control when LS−>off, HS−>on		0.4		V
LS FET Gate Voltage Comparator Propagation Delay	LS_DEL			10		ns
The Maximum Reverse Polarity Current	LS_IREV	LSx_IREV_NOCTRL = 1			300	mA

Table 13. BUCK REGULATOR – LS SWITCH PRE−DRIVER (continued)

Characteristic	Symbol	Conditions	Min	Typ	Max	Unit
The non−overlap Time LS−off to HS−on	LS_DT	Adaptive: LSx_NO_MD[1:0] = 00 (Note 1)		30		ns
	LS_FNO1	Adaptive: LSx_NO_MD[1:0] = 01	1	6.5		% of Toff
	LS_FNO2	Fixed: LSx_NO_MD[1:0] = 10		2.5		
	LS_FNO3	Fixed: LSx_NO_MD[1:0] = 11		5		

1. The time from detection of the LS switch in off state (pre−driver voltage at LS_VT threshold), to start of switching HS on.

Table 14. 5 V TOLERANT DIGITAL INPUTS (SCLK, CSB, SDI, LEDCTRL1, LEDCTRL2, RSTB)

Characteristic	Symbol	Conditions	Min	Typ	Max	Unit
High−level Input Voltage	VINHI		2			V
Low−level Input Voltage	VINLO				0.8	V
Pull Resistance (Note 1)	Rpull		40		160	kΩ
LED PWM Propagation Delay (Note 2)	BUCKx_SW_DEL	Activation time of the BUCKx switch from the LEDCTRLx pin	4.4	5.5	6.95	μs
Sampling Resolution	LEDCTRL_SR			100	125	ns
RSTB Debouncer Time	RSTB_DEB			100	200	ns

1. Pull down resistor (Rpd) for RSTB, LEDCTRLx, SDI and SCLK, pull up resistor (Rpu) for CSB to VDD.
2. Jitter is present due to the internal resynchronization.

Table 15. 5 V TOLERANT OPEN−DRAIN DIGITAL OUTPUT (SDO)

Characteristic	Symbol	Conditions	Min	Typ	Max	Unit
Low−voltage Output Voltage	VOUTLO	Iout = −10 mA (current flows into the pin)			0.4	V
Equivalent Output Resistance	RDSON	Lowside switch		10	40	Ω
SDO Pin Leakage Current	SDO_ILEAK				2	μA
SDO Pin Capacitance	SDO_C				10	pF
CLK to SDO Propagation Delay	SDO_DL	Low−side switch activation/deactivation time; @1 kΩ to 5 V, 100 pF to GND, for falling edge V(SDO) goes below 0.5 V			60	ns

Table 16. 3V DIGITAL INPUTS (TEST, TEST1, TEST2)

Characteristic	Symbol	Conditions	Min	Typ	Max	Unit
High−level Input Voltage	VIN3HI		2.3			V
Low−level Input Voltage	VIN3LO				0.8	V
Pull Resistance	Rpd3	Pull−down resistance			60	kΩ

Table 17. SPI INTERFACE

Characteristic	Symbol	Conditions	Min	Typ	Max	Unit
CSB Setup Time	t_{CSS}		0.5			μs
CSB Hold Time	t_{CSH}		0.25			μs
SCLK Low Time	t_{WL}		0.5			μs
SCLK High Time	t_{WH}		0.5			μs
Data−in (DIN) Setup Time, Valid Data before Rising Edge of CLK	t_{SU}		0.25			μs
Data−in (DIN) Hold Time, Hold Data after Rising Edge of CLK	t_{H}		0.275			μs
Output (DOUT) Disable Time (Note1)	t_{DIS}		0.08		0.32	μs
Output (DOUT) Valid (Note 1)	$t_{V1\rightarrow0}$				0.32	μs
Output (DOUT) Valid (Note 2)	$t_{V0\rightarrow1}$				0.32 + t(RC)	μs

Table 17. SPI INTERFACE (continued)

Characteristic	Symbol	Conditions	Min	Typ	Max	Unit
Output (DOUT) Hold Time	t_{HO}		0.01			µs
CSB High Time	t_{CS}		1			µs

1. SDO low−side switch activation time
2. Time depends on the SDO load and pull−up resistor

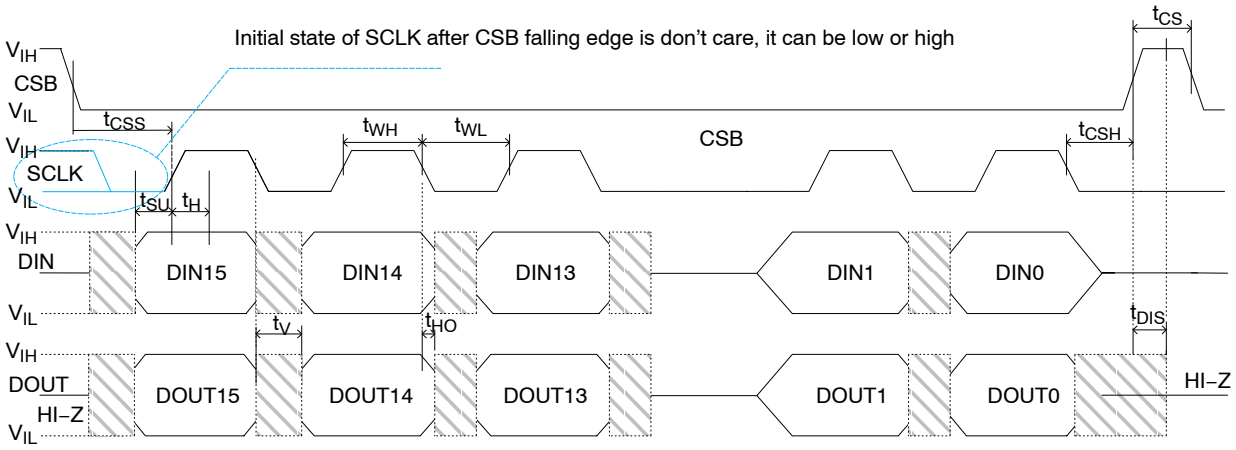

Figure 5. SPI Communication Timing

TYPICAL CHARACTERISTICS

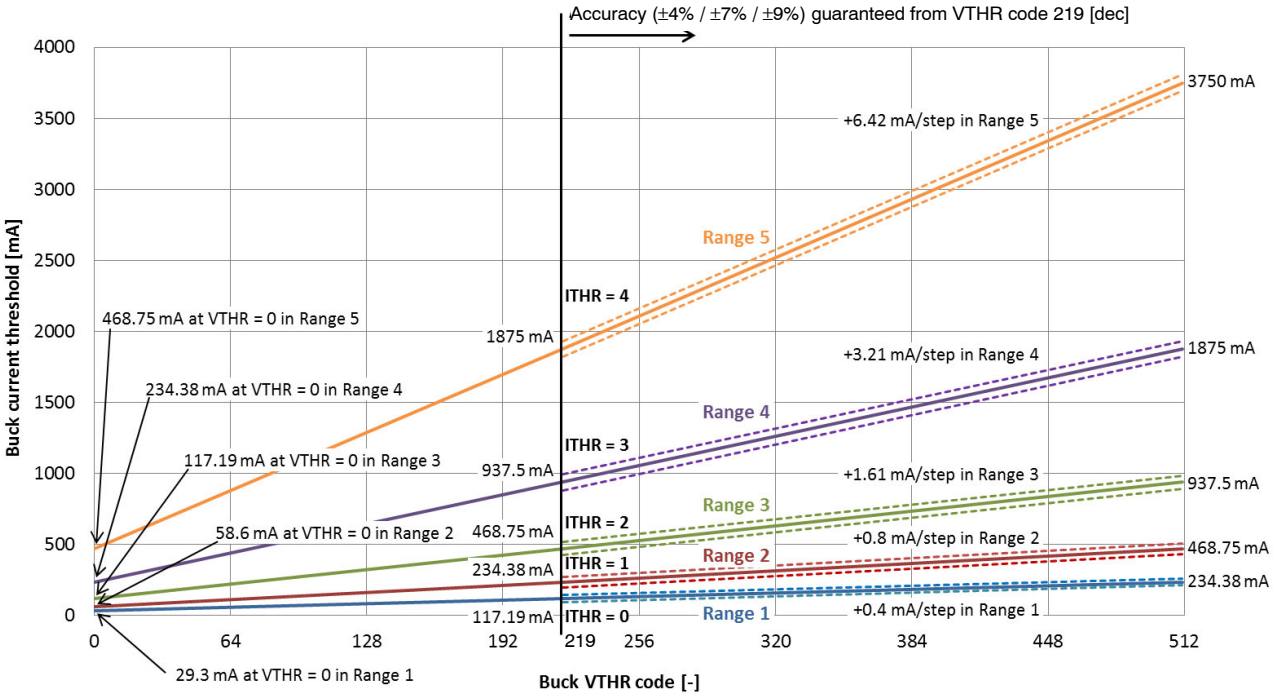

Figure 6. Buck Peak Current vs. Ranges and VTHR Code

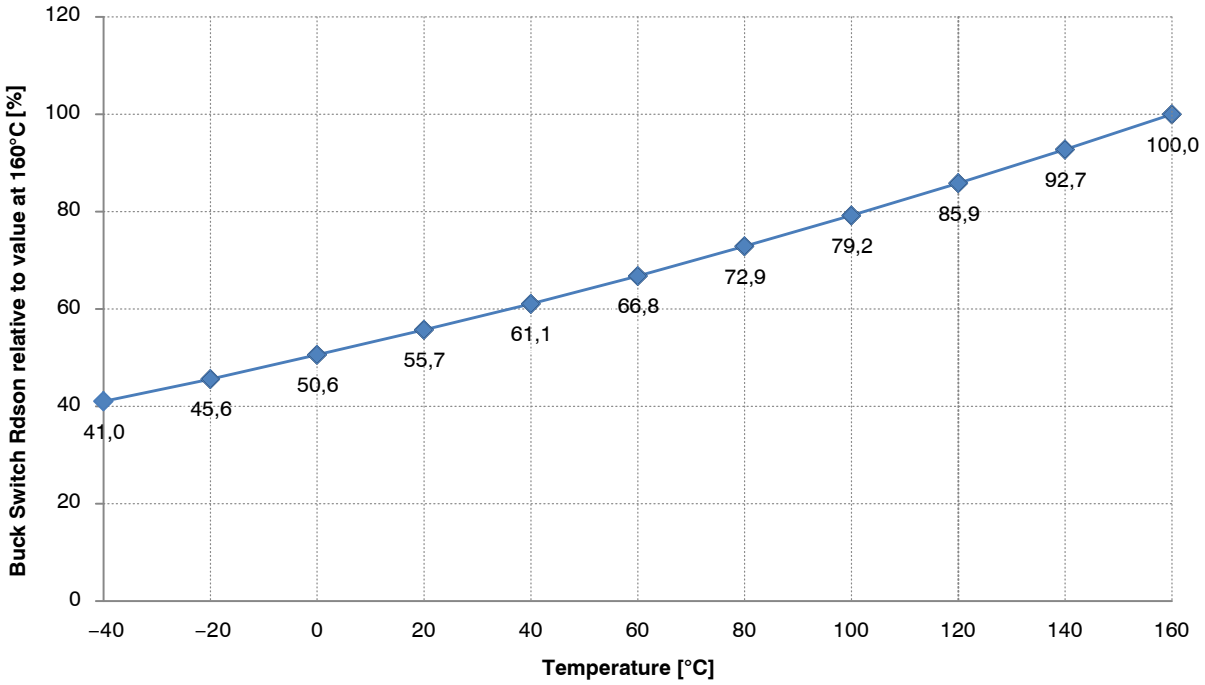

Figure 7. Typical Temperature Behavior of Buck HS Switch Rdson Relative to the Value at 160ºC

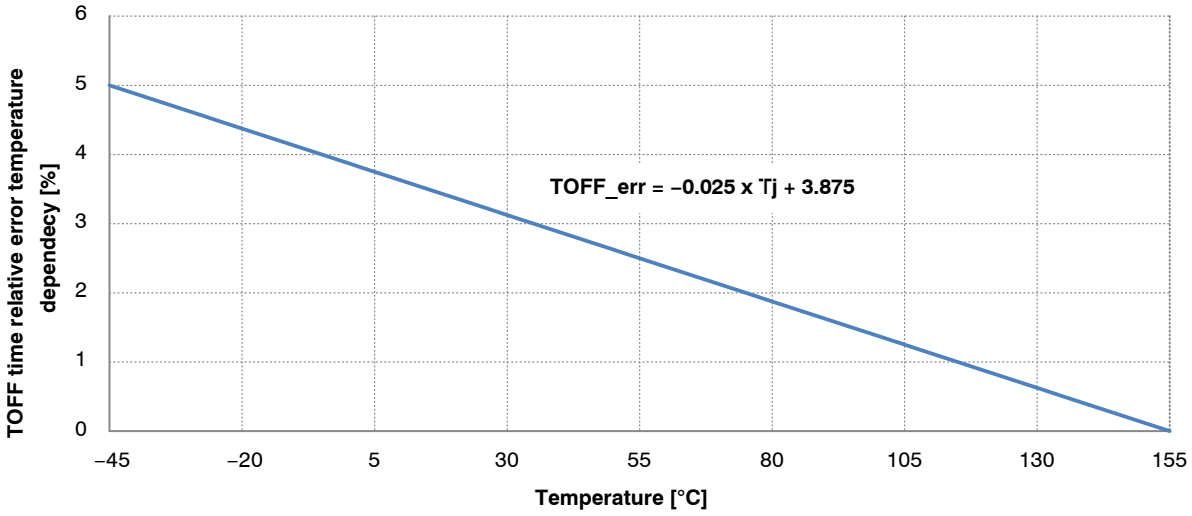

Figure 8. TOFF Time Relative Error Temperature Dependency Relative to Thot at 155°C

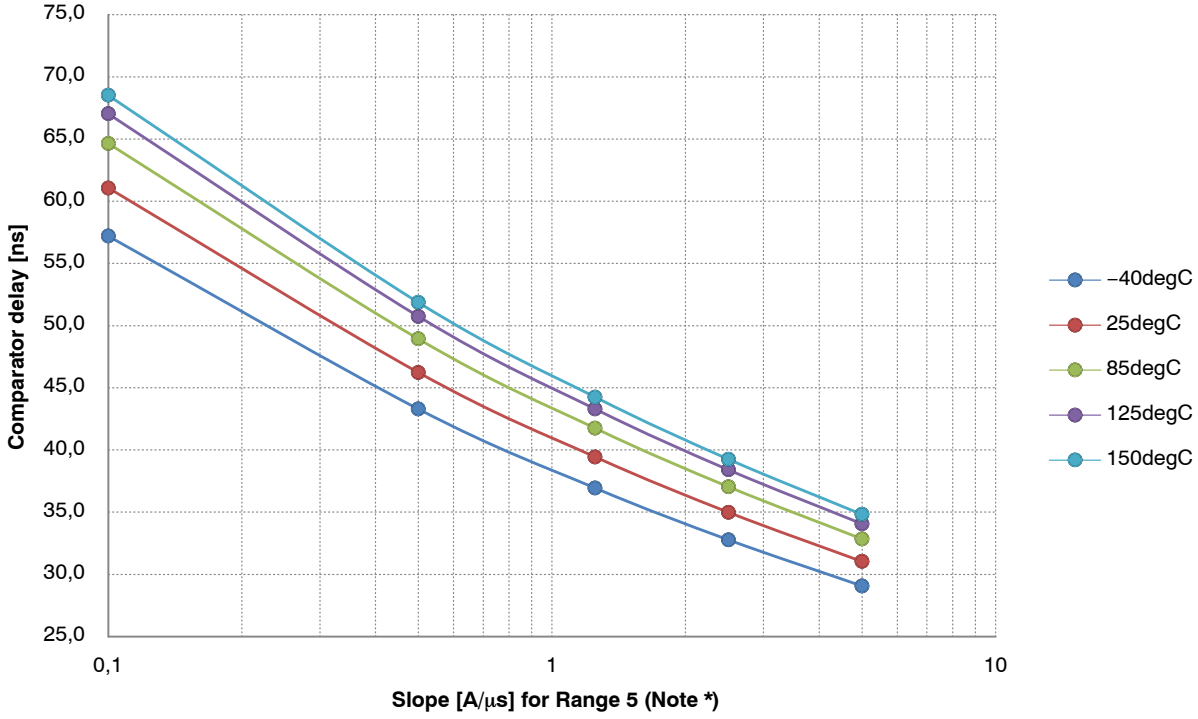

Figure 9. Typical Comparator Delay vs Slope

Notes:
1. Range 5: Comp. delay [ns] = (0.04 × Temp [°C] + 40) × Slope [A/us, range 5] ^ (−0.17)
2. Range 4: Comp. delay [ns] = (0.04 × Temp [°C] + 40) × Slope × 2 [A/us, range 5] ^ (−0.17)
3. Range 3: Comp. delay [ns] = (0.04 × Temp [°C] + 40) × Slope × 4 [A/us, range 5] ^ (−0.17)
4. Range 2: Comp. delay [ns] = (0.04 × Temp [°C] + 40) × Slope × 8 [A/us, range 5] ^ (−0.17)
5. Range 1: Comp. delay [ns] = (0.04 × Temp [°C] + 40) × Slope × 16 [A/us, range 5] ^ (−0.17)

*For additional information on our Pb−Free strategy and soldering details, please download the **onsemi** Soldering and Mounting Techniques Reference Manual, SOLDERRM/D.

DETAILED OPERATING DESCRIPTION

Supply Concept in General

Two voltages have to be brought to the NCV78825 chip – low voltage VDRIVE supply and high voltage VBOOST for providing energy to the buck regulators. More detailed description follows.

VDRIVE Supply

The VDRIVE supply voltage represents power for the complete LS pre−driver block as well as for VDD supply. The selection of external LS FET is driven by available voltage for VDRIVE supply. There is not implemented any voltage monitor on VDRIVE supply.

VDD Supply

The VDD supply is the low voltage digital and analog supply for the chip and derives energy from VDRIVE supply voltage. NCV78825 contains internal VDD regulator.

The Power−On−Reset circuit (POR) monitors the VDD voltage and RSTB pin to control the out−of−reset and reset entering state. At power−up, the chip will exit from reset state when VDD > POR3V_H and RSTB pin is in “log. 1”. No SPI communication is possible in reset state.

VBOOST Supply

The VBOOST supply voltage is the main high voltage supply for the chip. The voltage is supposed to be provided by booster chip such as NCV78702/3 or NCV78763 in the application. VINBCKx pins have to be connected by low impedance track to this supply to ensure proper buck performance.

The VBOOST voltage is monitored by under−voltage comparator to check sufficient zapping voltage at VBOOST pin during OTP programming operation.

VBOOSTM3V Supply

The VBOOSTM3V is the high side auxiliary supply for driving the gates of the buck regulator’s integrated high−side P−MOSFET switches. This supply receives energy directly from the VBOOST pin, which has to be connected by low impedance track to input pins of both buck channels VINBCKx.

The dedicated Power−On−Reset circuit (POR) of high−side P−MOSFET switches monitors correct voltage level of both this auxiliary supply and VBOOST voltage in order to guarantee correct control of integrated switches.

Module Startup

A limited transient activation of the buck switch inside the NCV78825 device can be measured at module startup, when supply voltages VBOOST and VDRIVE rise for the first time and voltage regulators VDD and M3V pass POR thresholds.

In rare application cases a limited energy transfer to the buck circuit, may build a voltage on the output capacitor which reaching the LED voltage threshold, resulting in a weak light output pulse. The pulse duration can be suppressed by using slower VBOOST slope, smaller M3V capacitor, bigger output capacitor value and VDRIVE supply connection before VBOOST supply.

Internal Clock Generation – OSC10M

An internal RC clock named OSC10M is used to run all the digital functions in the chip. The clock is trimmed in the factory prior to delivery. Its accuracy is guaranteed under full operating conditions and is independent from external component selection (refer to Table 9 for details). All timings depend on OSC10M accuracy.

BUCK REGULATOR

General

The NCV78825 contains two high−current integrated buck current regulators, which are the sources for the LED strings. The bucks are powered from the external booster regulator.

Buck Current Regulation Principle

Each buck controls the individual inductor peak current ($I_{BUCKpeak}$) and incorporates a constant ripple ($\Delta I_{BUCKpkpk}$) control circuit to ensure also stable average current through the LED string, independently from the string voltage. The buck average current is in fact described by the formula:

$$I_{BUCK_{AVG}} = I_{BUCK_{peak}} - \frac{\Delta I_{BUCK_{pkpk}}}{2} \quad \text{(eq. 1)}$$

This is graphically exemplified by Figure 10.

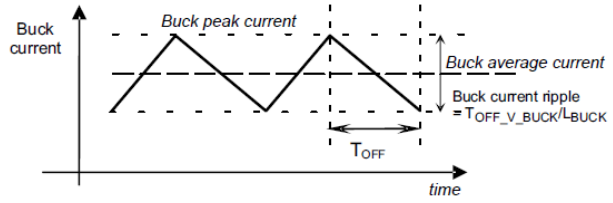

Figure 10. Buck Regulator Controlled Average Current

The parameter $I_{BUCKpeak}$ is programmable through the device by means of the internal registers for range selection BUCKx_ISENS_THR[2:0] and current threshold code BUCKx_VTHR[8:0]. The range setting will be applied only after the setting of the current threshold in order to allow smooth changes of peak current.

The formula that defines the total ripple current over the buck inductor is also hereby reported:

$$I_{BUCK_{pkpk}} = T_{OFF} \times \frac{(V_{LED} + V_{DIODE})}{L_{BUCK}} = T_{off} \times \frac{V_{COIL}}{L_{BUCK}} \quad \text{(eq. 2)}$$

In the formula above, T_{OFF} represents the buck switch off time, V_{LED} is the LED voltage feedback sensed at the NCV78825 VLEDx pin and L_{BUCK} is the buck inductance value. The parameter $T_{OFF} \times V_{COIL}$ is programmable by SPI (BUCKx_TOFF[4:0] register), with values related to Table 12. In order to achieve a constant ripple current value, the device varies the T_{OFF} time inversely proportional to the V_{COIL} sensed at the device pin, according to the selected factor $T_{OFF} \times V_{COIL}$.

As a consequence to the constant ripple control and variable off time, the buck switching frequency depends on the boost voltage and LED voltage in the following way:

$$f_{BUCK} = \frac{(V_{BOOST} - V_{LED})}{V_{BOOST}} \times \frac{1}{T_{OFF}} = \frac{(V_{BOOST} - V_{LED})}{V_{BOOST}} \times \frac{V_{COIL}}{T_{off} \times V_{COIL}} \quad \text{(eq. 3)}$$

If the offset cancelation of the peak current comparator is not disabled by BUCKx_OFF_CMP_DIS bit, the inductor peak current will vary from cycle−to−cycle as depicted on Figure 11.

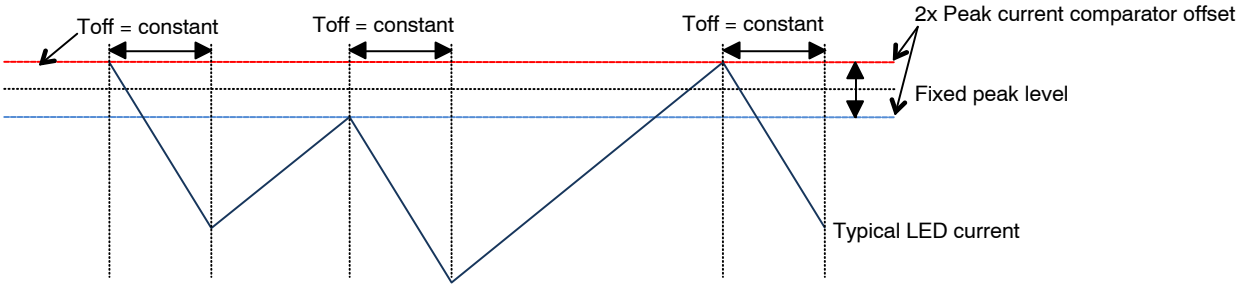

Figure 11. Peak Current Comparator Offset Cancelation

The LED average current in time (DC) is equal to the buck time average current. Therefore, to achieve a given LED current target, it is sufficient to know the buck peak current and the buck current ripple. A rule of thumb is to count a minimum of 50% ripple reduction by means of the capacitor C_{BUCK} and this is normally obtained with a low cost ceramic component ranging from 100 nF to 470 nF (such values are typically used at connector sides anyway, so this is included in a standard BOM). The use of C_{BUCK} is a cost effective way to improve EMC performances without the need to increase the value of L_{BUCK}, which would be certainly a far more expensive solution. The following figure reports a typical example waveform:

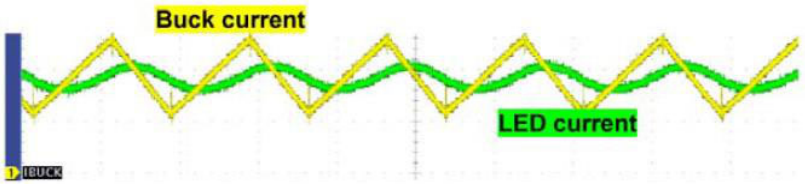

Figure 12. LED Current AC Components Filtered out by Output Impedance (Oscilloscope Snapshot)

SW Compensation of the Buck Current Accuracy

In order to ensure buck current accuracy as specified in Table 12, set of constants trimmed during manufacturing process is available. Microcontroller should use them in the following way:

To reach ±9 % accuracy (±7 % for Range 5) over whole temperature operating range:

- All ranges: BUCKx_ISENS_TRIM[6:0] = BUCKx_ISENS_RNG[6:0]
- BUCKx_ISENS_RNG[6:0] is trimming constant for the highest current range (Range 5) at hot temperature
- BUCKx_ISENS_RNG[6:0] constant is loaded into BUCKx_ISENS_TRIM[6:0] register automatically after the reset of the device

To reach ±7 % accuracy over whole temperature operating range:

- BUCKx_ISENS_Dx[3:0] registers, meaning delta of the trimming constant with respect to the higher current range at hot temperature, have to be used. Trimming constant for the particular range at hot temperature can be then calculated as:
  - Range 5:
    BUCKx_R5_trim_hot = BUCKx_ISENS_RNG[6:0],
  - Range 4:
    BUCKx_R4_trim_hot = BUCKx_ISENS_RNG[6:0] + BUCKx_ISENS_D4[3:0],
  - Range 3:
    BUCKx_R3_trim_hot = BUCKx_ISENS_RNG[6:0] + BUCKx_ISENS_D4[3:0] + BUCKx_ISENS_D3[3:0],
  - Range 2:
    BUCKx_R2_trim_hot = BUCKx_ISENS_RNG[6:0] + BUCKx_ISENS_D4[3:0] + BUCKx_ISENS_D3[3:0] + BUCKx_ISENS_D2[3:0],
  - Range 1:
    BUCKx_R1_trim_hot = BUCKx_ISENS_RNG[6:0] + BUCKx_ISENS_D4[3:0] + BUCKx_ISENS_D3[3:0] + BUCKx_ISENS_D2[3:0] + BUCKx_ISENS_D1[3:0],

Where delta of the trimming constant BUCKx_ISENS_Dx[3:0] is signed, coded as two's complement. Range of this constant is decadic <−8; 7>, binary <1000; 0111>.

Calculated trimming constant of selected range (y) has to be then written into trimming SPI register:

BUCKx_ISENS_TRIM[6:0] = BUCKx_Ry_trim_hot

To reach ±4 % accuracy over whole temperature operating range:

- In addition to BUCKx_ISENS_Dx[3:0] registers, the BUCK_ISENS_TCx[3:0] registers, meaning temperature coefficient for the appropriate range, have to be used. Trimming value for a certain temperature can be then calculated as:
  - Range 5:
    $BUCK1_R5_trim = BUCK1_R5_trim_hot + k_{L1} \times (Tj - Thot) + k_Q \times (Tj - Thot)^2$,
    $BUCK2_R5_trim = BUCK2_R5_trim_hot + k_{L3} \times (Tj - Thot) + k_Q \times (Tj - Thot)^2$
  - Range 4:
    $BUCK1_R4_trim = BUCK1_R4_trim_hot + k_{L1} \times (Tj - Thot) + k_Q \times (Tj - Thot)^2$,
    $BUCK2_R4_trim = BUCK2_R4_trim_hot + k_{L3} \times (Tj - Thot) + k_Q \times (Tj - Thot)^2$
  - Range 3:
    $BUCK1_R3_trim = BUCK1_R3_trim_hot + k_{L1} \times (Tj - Thot) + k_Q \times (Tj - Thot)^2$,
    $BUCK2_R3_trim = BUCK2_R3_trim_hot + k_{L3} \times (Tj - Thot) + k_Q \times (Tj - Thot)^2$
  - Range 2:
    $BUCK1_R2_trim = BUCK1_R2_trim_hot + k_{L0} \times (Tj - Thot) + k_Q \times (Tj - Thot)^2$,
    $BUCK2_R2_trim = BUCK2_R2_trim_hot + k_{L2} \times (Tj - Thot) + k_Q \times (Tj - Thot)^2$,
  - Range 1:
    $BUCK1_R1_trim = BUCK1_R1_trim_hot + k_{L0} \times (Tj - Thot) + k_Q \times (Tj - Thot)^2$,
    $BUCK2_R1_trim = BUCK2_R1_trim_hot + k_{L2} \times (Tj - Thot) + k_Q \times (Tj - Thot)^2$

Where buck temperature coefficient BUCK_ISENS_TCx[3:0] is signed, coded as two's complement. Range of this constant is decadic <−8; 7>, binary <1000; 0111>

- k_{Lx} is linear coefficient for each current range calculated:
  k_{Lx} = (BUCK_ISENS_TCx[3:0] – $k_{Q\,x}$ (200°C)^2)/(−200°C) [code/°C]
- k_Q is quadratic constant for all current ranges:
  $k_Q = 1.2 \times 10^{-4}$ [code/(°C)^2]
- Tj is junction temperature in °C calculated from VTEMP[7:0] SPI register value according to the equation defined in chapter ADC: Device Temperature ADC: V_{TEMP}
- Thot temperature is constant equal to 155°C

Calculated trimming constant of selected range (y) has to be then written into trimming SPI register:

BUCKx_ISENS_TRIM[6:0] = BUCKx_Ry_trim

The BUCKx_ISENS_TRIM[6:0] SPI register allows compensation of the peak current app. in range ±40 % from actual value according to the following equation:
IBUCKx = (ITHRx_000 + δITHRx × BUCKx_VTHR[8:0]) × (1 + 0.4 × ((BUCKx_ISENS_TRIM[6:0] − 63)/63)),

Where ITHRx_000 is current for VTHR code 0 in ITHRx range (see Table 12), δITHRx code step in range ITHRx (see Table 12).

The complete buck circuit diagram follows:

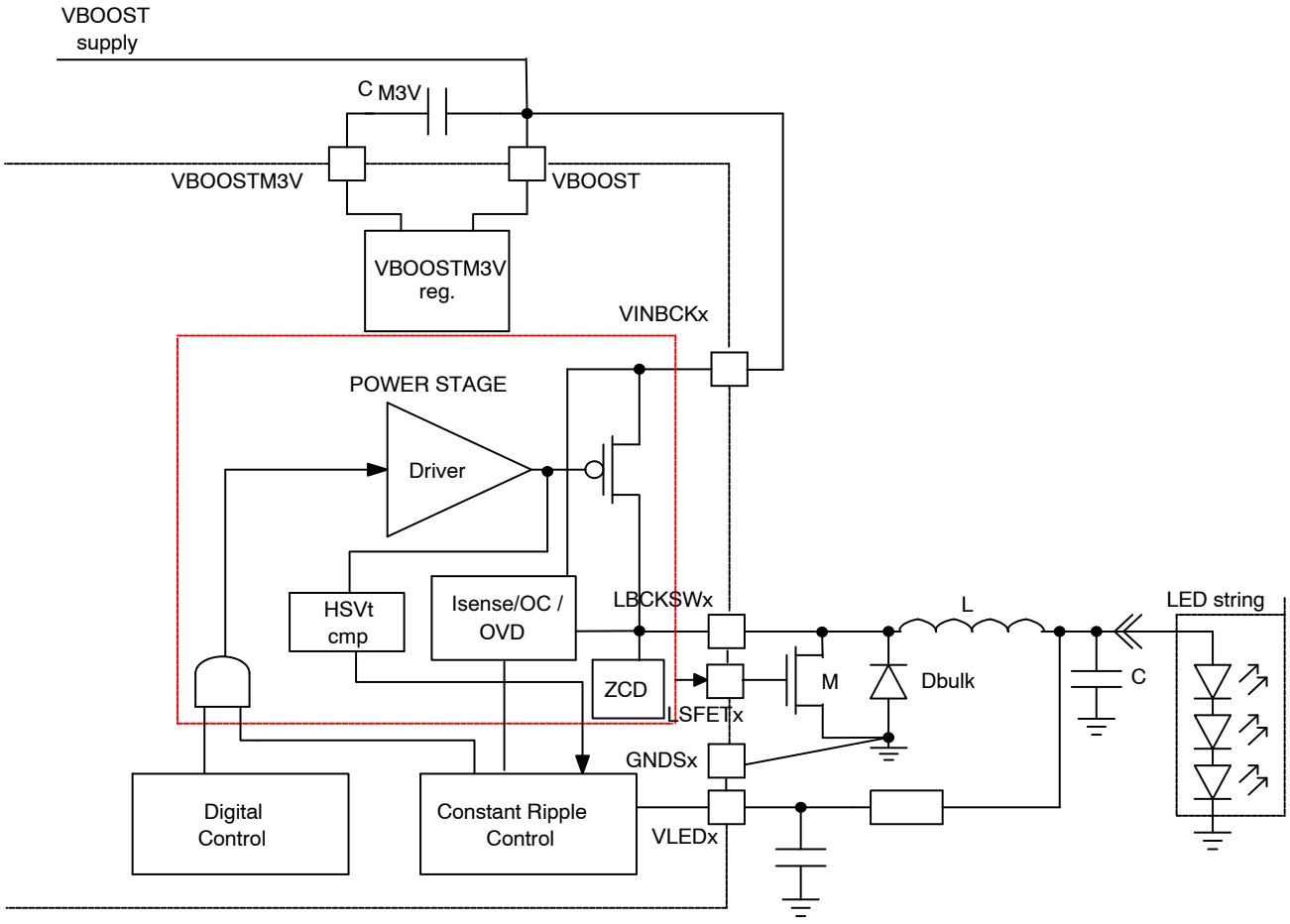

Figure 13. Buck Regulator Circuit Diagram

Zero Cross Detector

The zero−cross−detection (ZCD) comparator is implemented for the case when VLED is low (< 1.8 V typ.) to ensure proper Toff time termination just at the moment when the coil current decreases to zero (boundary conduction mode).

ZCD is also used in normal buck mode when LS switch is functional for proper determination of LS switch activation and also deactivation when LS switch should be disabled in reverse buck current mode.

HSVt Comparator

The HSVt comparator senses the gate voltage of the HS switch and is used together with ZCD comparator for proper activation of the LS switch. The comparator indicates that gate voltage of the HS switch is at its Vt voltage, so it is safe to turn LS switch on without risk of cross−current from VBOOST/VINBCKx to ground.

Over Current Protection

Being a current regulator, the NCV78825 buck is by nature preventing overcurrent in all normal situations. However, in order to protect the system from overcurrent even in case of failures, protection mechanism is available.

This protection is based on internal sensing over the buck switch: when the peak current rises above the limit (situated above OCDRx level, see Table 12), an internal counter starts to increment at each period, until the count written in BUCK_OC_OCCMP_THR[1:0] + 1 is attained. The counter is reset if the buck channel is disabled and also at each dimming cycle. From the moment the count is reached onwards, the buck is kept continuously off, until the SPI error flag OCLEDx is read. After reading the flag, the buck channel “x” is automatically re−enabled and will try to regulate the current again.

Over Voltage Detector

The OVD comparator ensures switching ON the HS switch in case, that LBCKSWx pin is externally overdriven over the VINBCKx potential. This feature prevents possible HS switch bulk current and associated power loss or even latch−up.

LS pre−driver

The LS pre−driver drives external NMOS device that is performing synchronous rectification. The main advantage is more efficient buck performance by minimizing voltage drop across the flyback diode. The pre−driver is supplied from VDRIVE pin, so its output is either switched to VDRIVE or to GNDSx based on the required state of the LS switch.

Implemented pull−down resistor ensures off state of the LS switch in case that there is no supply of the device.

The LS pre−driver also contains the output voltage monitor, the comparator indicating that LS switch gate voltage is below a certain threshold voltage. The switching on of the LS driver (LS pre−driver output is switched to VDRIVE) is in normal continuous buck mode determined by ZCD or HSVt comparator, the faster event activates the LS switch.

The different buck modes and corresponding LS switch functionality is implemented as follows:

- Buck output current discontinuous mode, (VLED>VLED_LMT, LSx_IREV_NOCTRL = 0) the LS driver is switched off as soon as the voltage drop across the LS switch rises above ZCD threshold and stays off till end of the corresponding Toff period
- Buck output current discontinuous mode, (VLED>VLED_LMT, LSx_IREV_NOCTRL = 1) the LS driver stays on till end of the Toff period regardless of the ZCD state. The maximum buck output reverse current (LS_IREV) is not sensed by the chip. It is responsibility of application to guarantee that the current will never exceed the specified value
- VLED_LOW is active, (VLED<VLED_LMT, LSx_VLEDLOW_ENA = 0) the LS driver is deactivated immediately, the bulk diode of the LS switch is working as a flyback diode
- VLED_LOW is active, (VLED<VLED_LMT, LSx_VLEDLOW_ENA = 1) the LS driver stays functional like in case of high VLED voltage (VLED>VLED_LMT)
- LS driver is disabled (LSx_DRV_ENA = 0), the LS pre−driver output is switched to GNDSx, the LS switch is kept off

Non−overlap Control of HS and LS Switches

The Non−overlap time is controlled in such a way, that HS switch is activated just at the moment when gate voltage of the LS switch is below its threshold voltage still with some safety non−overlap time (see Table 13 for details). The different non−overlap times can be selected by LS non−overlap mode selection SPI bits:

- Adaptive mode (LSx_NO_MD[1:0] = “00” or “01”), the switching off of the LS driver and switching on of the HS driver is controlled by the self−adaptation circuitry. This circuitry ensures, that the HS switch is switched on just at the moment when gate voltage of the LS FET passes through a LS_VT threshold when the LS FET is surely off.
  During settling time, the LS FET can be switched off earlier than in balanced state, but the LS FET on time is corrected for the next buck period in such a way, that the balanced state should be reached.
  During settling time, the LS FET can be switched off later than in balanced state, but the LS FET on time is corrected for the next buck period in such a way, that the balanced state should be reached. As a consequence, the Toff time must be extended just for this buck period to prevent the cross−current
- Fixed mode (LSx_NO_MD[1:0] = “10” or “11”), the switching off of the LS driver and switching on of the HS driver is controlled by constant time as fixed percentage of Toff time regardless of the LS FET parasitics and switch−off time. In case of improper application setup, the fixed non−overlap time can be too short for given Toff time. In such case Toff time is automatically extended just to prevent cross−current (LS switch is still on, but HS switch should be already switched on)

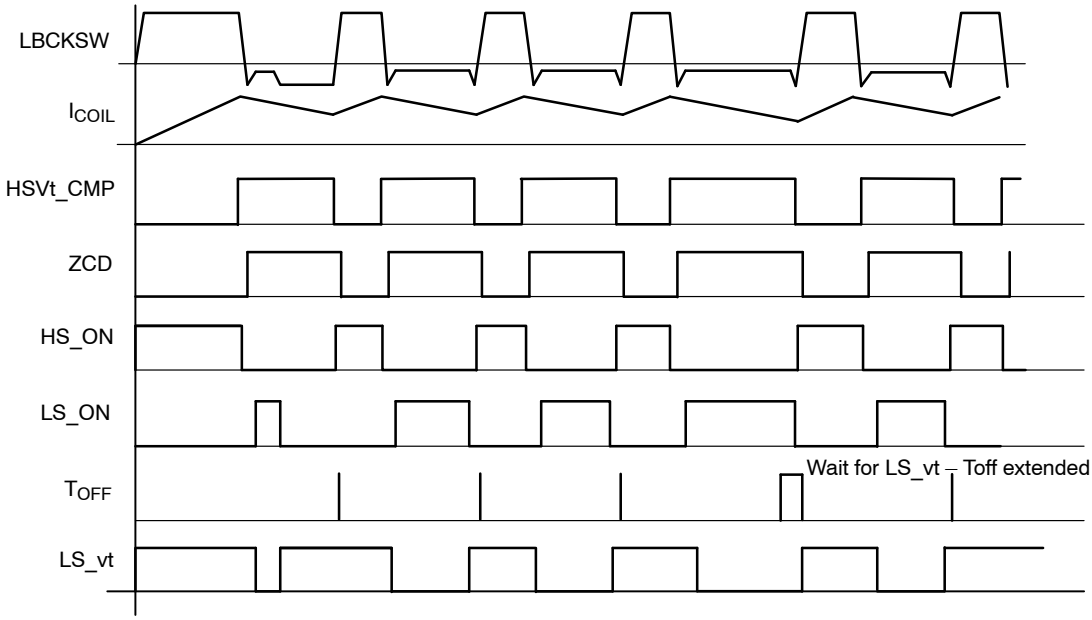

Figure 14. Adaptive HS/LS Non-overlap Control

Paralleling the Bucks for Higher Current Capability

Different buck channels can be paralleled at the module output (after the buck inductors) for *higher current capability* on a unique channel, summing up together the individual DC currents.

The Buck channels can be configured to a master−slave synchronization mode by SPI bit BUCK_SYNC set to “1”. Then, the Buck 1 performs as in the normal mode, the Buck 2 “ON” phase starts when Buck1 “ON” phase finishes (Buck 1 peak current reached) and also Buck 2 “OFF” phase is synchronized with this signal from the master (Buck 2 Toff generator is not used). Only adaptive non−overlap control for Buck 2 is allowed (LS2_NO_MD[1:0] = “00” or “01”). If fixed non−overlap is set (LS2_NO_MD[1:0] = “10” or “11”) then LS2_NO_MD[1:0] = “01” is set in the device automatically. The duty cycle has to be less than 50% for proper synchronous operation. This mode of operation is suitable for further improvement of EMC performance, but for the cost of worse Buck 2 average current accuracy.

Dimming

The NCV78825 supports both analog and digital dimming (or so called PWM dimming). Analog dimming is performed by controlling the LED amplitude current during operation. This can be done by means of changing the peak current level and/or the $T_{OFF} \times V_{COIL}$ constants by SPI commands (see Buck Regulator section).

In this section, only the PWM dimming is described as this is the preferred method to maintain the desired LED color temperature for a given current rating. In PWM dimming, the LED current waveform frequency is constant and the duty cycle is set according to the required light intensity. In order to avoid the beats effect, the dimming frequency should be set at “high enough” values, typically above 300 Hz.

PWM dimming is controlled externally by means of LEDCTRLx inputs.

External Dimming

The two independent control inputs LEDCTRLx handle the dimming signals for the related channel “x”. In external dimming, the buck activation is transparently linked to the logic status of the LEDCTRLx pins. The only difference is the controlled phase shift of typical 5.5 μs (see BUCKx_SW_DEL parameter in Table 14) that allows synchronized measurements of the VLEDx pins via the ADC (see dedicated section for more details). As the phase shift is applied both to rising edges and falling edges, with a very limited jitter, the PWM duty cycle is not affected. Apart from the phase shift and the system clock OSC10M, there is no limitation to the PWM duty cycle values or resolutions at the bucks, which is a copy of the reference provided at the inputs.

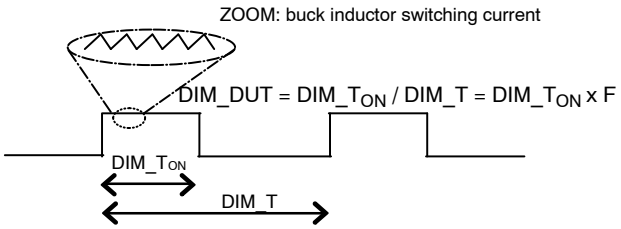

Figure 15. Buck Current Digital or PWM Dimming

ADC

General

The built−in analog to digital converter (ADC) is an 8−bit capacitor based successive approximation register (SAR). This embedded peripheral can be used to provide the following measurements to the external Micro Controller Unit (MCU):

- VBOOST voltage: sampled at the VBOOST pin
- VDD voltage: sampled at the VDD pin
- VLED1ON, VLED2ON voltages
- VLED1 and VLED2 voltages
- VTEMP measurement (chip temperature)

The internal NCV78825 ADC state machine samples all the above channels automatically, taking care for setting the analog MUX and storing the converted values in memory. The external MCU can readout all ADC measured values via the SPI interface, in order to take application specific decisions. Please note that none of the MCU SPI commands interfere with the internal ADC state machine sample and conversion operations: the MCU will always get the last available data at the moment of the register read.

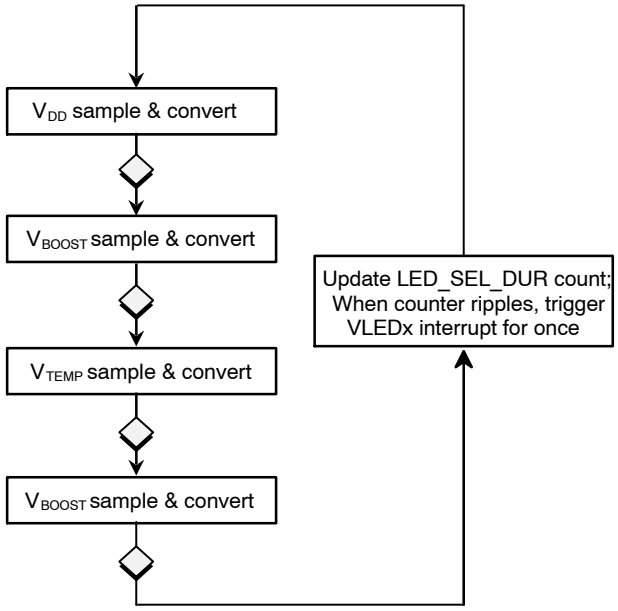

Figure 16. ADC Sample and Conversion Main Sequence

Referring to the figure above, the typical rate for a full SAR plus digital conversion per channel is 8 μs (Table 10). For instance, each new VBOOST ADC converted sample occurs at 16 μs typical rate, whereas for both the VBB and VTEMP channel the sampling rate is typically 32 μs, that is to say a complete cycle of the depicted sequence. This time is referred to as TADC_SEQ.

If the SPI setting LED_SEL_DUR[8:0] is not zero, then interrupts for the VLEDx measurements are allowed at the points marked with a rhombus, with a minimum cadence corresponding to the number of the elapsed ADC sequences (forced interrupt). In formulas:

$$T_{VLEDx_INT_forced} = LED_SEL_DUR[8:0] \times T_{ADC_SEQ} \quad \text{(eq. 4)}$$

In general, prior to the forced interrupt status, the VLEDxON ADC interrupts are generated when a falling edge on the control line for the buck channel “x” is detected by the device. In case of *external dimming*, this interrupt start signal corresponds to the LEDCTRLx falling edge together with a controlled phase delay (Table 14). The purpose of the phase delay is to allow completion the ongoing ADC conversion before starting the one linked to the VLEDx interrupt: if at the moment of the conversion LEDCTRLx pin is logic high, then the updated registers are VLEDxON[7:0] and VLEDx[7:0]; otherwise, if LEDCTRLx pin is logic low, the only register refreshed is VLEDx[7:0]. This mechanism is handled automatically by the NCV78825 logic without need of intervention from the user, thus drastically reducing the MCU cycles and embedded firmware and CPU cycles overhead that would be otherwise required.

To avoid loss of data linked to the ADC main sequence, one LED channel is served at a time also when interrupt requests from both channels are received in a row and a full sequence is required to go through to enable a new interrupt VLEDx. In addition, possible conflicts are solved by using a defined priority (channel pre−selection). Out of reset, the default selection is given to channel “1”. Then an internal flag keeps priority tracking, toggling at each time between channels pre−selection. Therefore, up to two dimming periods will be required to obtain a full measurement update of the two channels. This is not considered however a limitation, as typical periods for dimming signals are in the order of 1 ms period, thus allowing very fast failure detection.

A flow chart referring to the ADC interrupts is also displayed (see Figure 17).

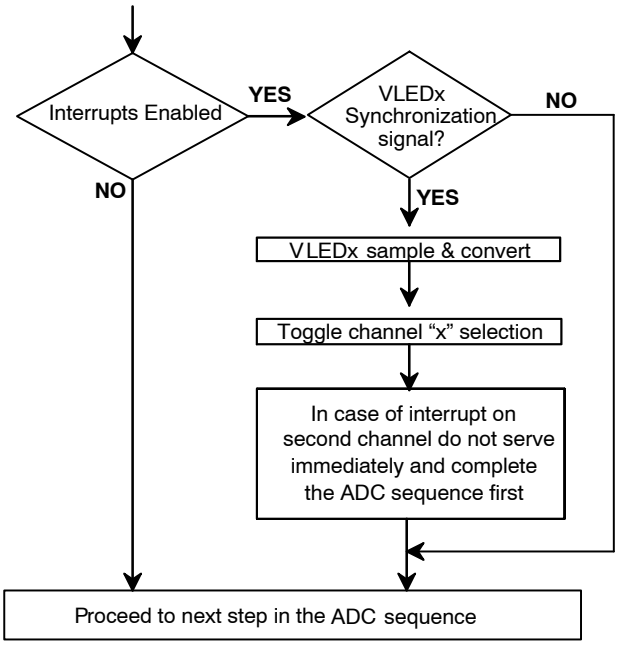

Figure 17. ADC VLEDx Interrupt Sequence

All NCV78825 ADC registers data integrity is protected by ODD parity on the bit 8 (that is to say the 9th bit if counting from the least significant bit named “0”). Please refer to the SPI map section for further details.

Logic Supply Voltage ADC: V_{DD}

The logic supply voltage is sampled at VDD pin. The (8−bit) conversion ratio is 4/255 (V/dec) = 0.0157 (V/dec) typical. The converted value can be found in the SPI register VDD[7:0], protected with ODD parity bit.

Boost Voltage ADC: V_{BOOST}

This measure refers to the boost voltage at the VBOOST pin, with an 8 bit conversion ratio of 70/255 (V/dec) = 0.274 (V/dec) typical, inside the SPI register VBOOST[7:0]. The value is protected by ODD parity bit. This measurement can be used by the MCU for diagnostics and booster control loop monitoring.

Device Temperature ADC: V_{TEMP}

By means of the VTEMP measurement, the MCU can monitor the device junction temperature (T_J) over time. The conversion formula is:

$$T_J = (VTEMP[7:0] - 50.5)/0.805 \quad \text{(eq. 5)}$$

VTEMP[7:0] is the value read out directly from the related 8bit−SPI register (please refer to the SPI map). The value is also used internally by the device for the *thermal warning* and *thermal shutdown* functions. More details on these two can be found in the dedicated sections in this document. The value is protected by ODD parity bit.

LED String Voltages ADC: V_{LEDx}, V_{LEDxON}

The voltage at the pins VLEDx (1, 2) is measured. There are 4 ranges available, that can be selected by means of ADC_VLEDx_RNG_SEL[1:0] register, to obtain higher resolution for LED voltage measurement.

Conversion ratios in dependency on selected range are:

0x0: 70/255 (V/dec) = 0.274 (V/dec)
0x1: 50/255 (V/dec) = 0.196 (V/dec)
0x2: 40/255 (V/dec) = 0.157 (V/dec)
0x3: 30/255 (V/dec) = 0.118 (V/dec)

This information, found in registers VLEDxON[7:0] and VLEDx[7:0], can be used by the MCU to infer about the LED string status, for example, individual shorted LEDs. As for the other ADC registers, the values are protected by ODD parity.

Please note that in the case of constant LEDCTRLx inputs and no dimming (in other words dimming duty cycle equals to 0% or 100%) the VLEDx interrupt is forced with a rate equal to, given in the ADC general section. This feature can be exploited by MCU embedded algorithm diagnostics to read the LED channels voltage even when in OFF state, before module outputs activation (module startup pre−check).

DIAGNOSTICS

The NCV78825 features a wide range of embedded diagnostic features. Their description follows. Please also refer to the previous SPI section for more details.

- **Thermal Warning:**
  This mechanism detects a user−programmable junction temperature which is in principle close, but lower, to the chip maximum allowed, thus providing the information that some action (power de−rating) is required to prevent overheating that would cause Thermal Shutdown. A typical power de−rating technique consists in reducing the output dimming duty cycle in function of the temperature: the higher the temperature above the thermal warning, the lower the duty cycle. The thermal warning flag (TW) is given in status register 0x16 and is latched. When VTEMP[7:0] raises to or above THERMAL_WARNING_THR[7:0] threshold, the TW flag is set. At power up the default thermal warning threshold is typically 159°C (SPI code 179)
- **Thermal Shutdown:**
  This safety mechanism intends to protect the device from damage caused by overheating, by disabling the both buck channels. The diagnostic is displayed per means of the TSD bit in status register 0x16 (latched). Once occurred, the thermal shutdown condition is exited when the temperature drops below the thermal warning level, thus providing hysteresis for thermal shutdown recovery process. Outputs are re−enabled automatically if BUCKx_TSD_AUT_RCRV_EN = 1, respectively can be re−enabled by rising edge on BUCKx_EN if BUCKx_TSD_AUT_RCRV_EN = 0. The application thermal design should be made as such to avoid the thermal shutdown in the worst case conditions. The thermal shutdown level is not user programmable and is factory trimmed (see ADC_TSD in Table 10)
- **SPI Error:**
  In case of SPI communication errors the SPIERR bit in status register 0x16 is set. The bit is latched. For more details, please refer to section “SPI protocol: framing and parity error”
- **Open LEDx String:**
  Individual open LED diagnostic flags indicate whether the “x” string is detected open. The detection is based on a counter overflow of typical 50 µs when the related channel is activated. Both OPENLED1 and OPENLED2 flags (latched) are contained in status register 0x15. Please note that the open detection does not disable the buck channel(s)
- **Short LEDx String:**
  A short circuit detection is available independently for each LED channel per means of the flag SHORTLEDx (latched, status register 0x15). The detection is based on the voltage measured at the VLEDx pins via a dedicated internal comparator: when the voltage drops below the VLED_LMT threshold (1.8 V typ. , see Table 11) the related flag is set. Note that the detection is active when buck channel is enabled and inactive during the 1st switching period after enabling. In case of low VLEDx voltage the Toff time is terminated immediately when the inductor current reaches zero. This improves the dimming behavior via external short switches (pixel control)
- **Overcurrent on Channel x:**
  This diagnostics protects the LEDx and the buck channel x electronics from overcurrent. As the overcurrent is detected, the OCLEDx flag (latched, status register 0x15) is raised and the related buck channel is disabled. More details about the detection mechanisms and parameters are given in section “Buck Overcurrent Protection”
- **Buckx Status:**
  Register BUCKx_STATUS shows the actual status of Buckx output. When BUCKx_STATUS is 1, the corresponding output regulates current to the LED
- **LEDCTRLx Pin Status:**
  SPI registers LED1VAL resp. LED2VAL indicate the actual logic level of the debounced LEDCTRLx pins. These signals follow the output of 200 ns digital debouncers implemented on LEDCTRLx pins
- **Buckx Running at Minimum TON Time:**
  Register BUCKx_MIN_TON (latched) indicates that minimal TON time is detected on the corresponding channel. It is clear by read flag. This information can be used for detection of transition period during which the BUCKx output current decreases due to the change of BUCKx_VTHR code or BUCKx_ISENS_THR range
- **Buckx TON Time Duration:**
  SPI register BUCKx_TON_DUR[7:0] reflects the last measured Buckx TON time (1LSB = 200 ns) on the corresponding channel. When Buckx runs with TON time < typ. 200 ns, the BUCKx_TON_DUR[7:0] SPI register returns value 0x00. When Buckx is stopped, the BUCKx_TON_DUR[7:0] register keeps the last measured TON time
- **HW Reset:**
  The out of reset condition is reported through the HWR bit (latched). This bit is set only at each Power On Reset (POR) and indicates the device is ready to operate

Each diagnostic latched flag is cleared by read.

A short summary table of the main diagnostic bits related to the LED outputs follows.

Table 18. LED OUTPUTS DIAGNOSTIC SUMMARY

Diagnose		Detection level	LED Output	Latched
Flag	Description			
TW	Thermal Warning	SPI register programmable	Not Disabled (if no TSD, otherwise disabled)	Yes
TSD	Thermal Shutdown	Factory trimmed	Disabled (automatically re−enabled when temp falls below TW and BUCKx_TSD_AUT_RCVR_EN = 1)	Yes
SPIERR	SPI error	See SPI section	Not Disabled	Yes
OPENLEDx	LED string open circuit	Buck on time > TON_OPEN	Not Disabled	Yes
SHORTLEDx	LED string short circuit	VLEDx < VLED_LMT	Not Disabled	Yes
OCLEDx	LED string overcurrent	Ibuckx > OCDR{1..5}	Disabled	Yes

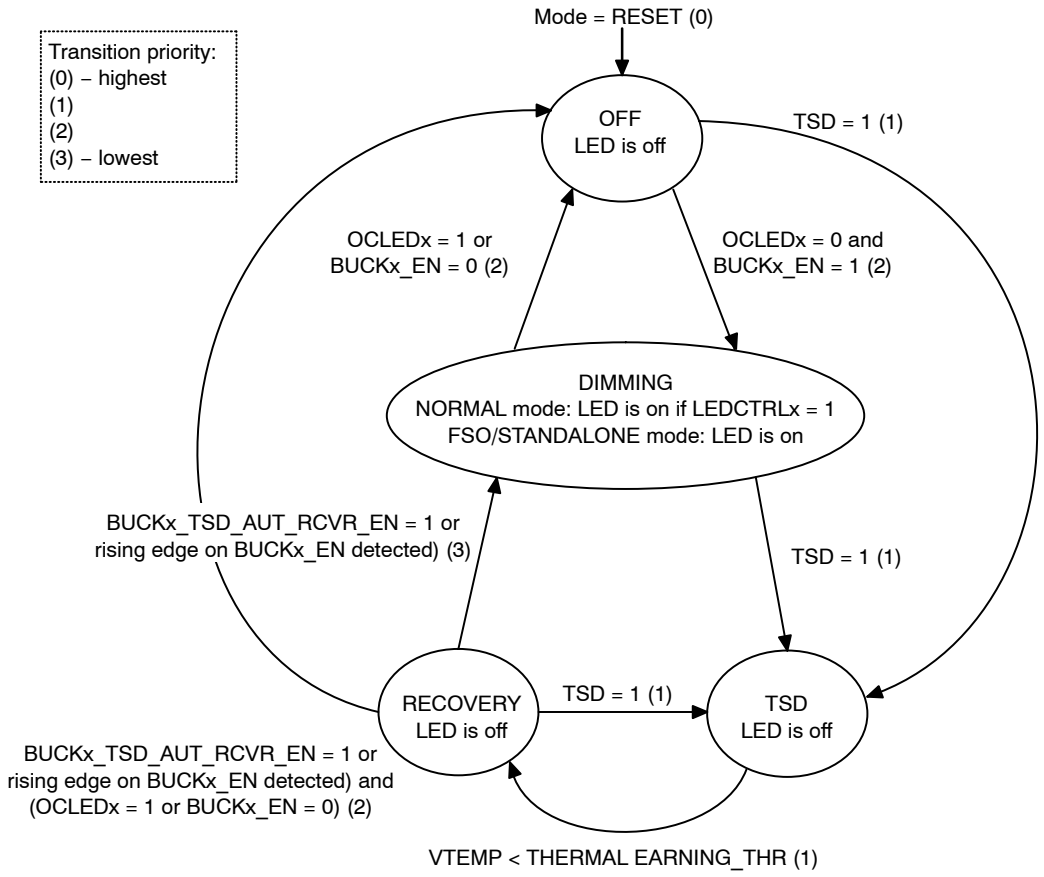

Figure 18. LED Dimming State Diagram

FUNCTIONAL MODE DESCRIPTION

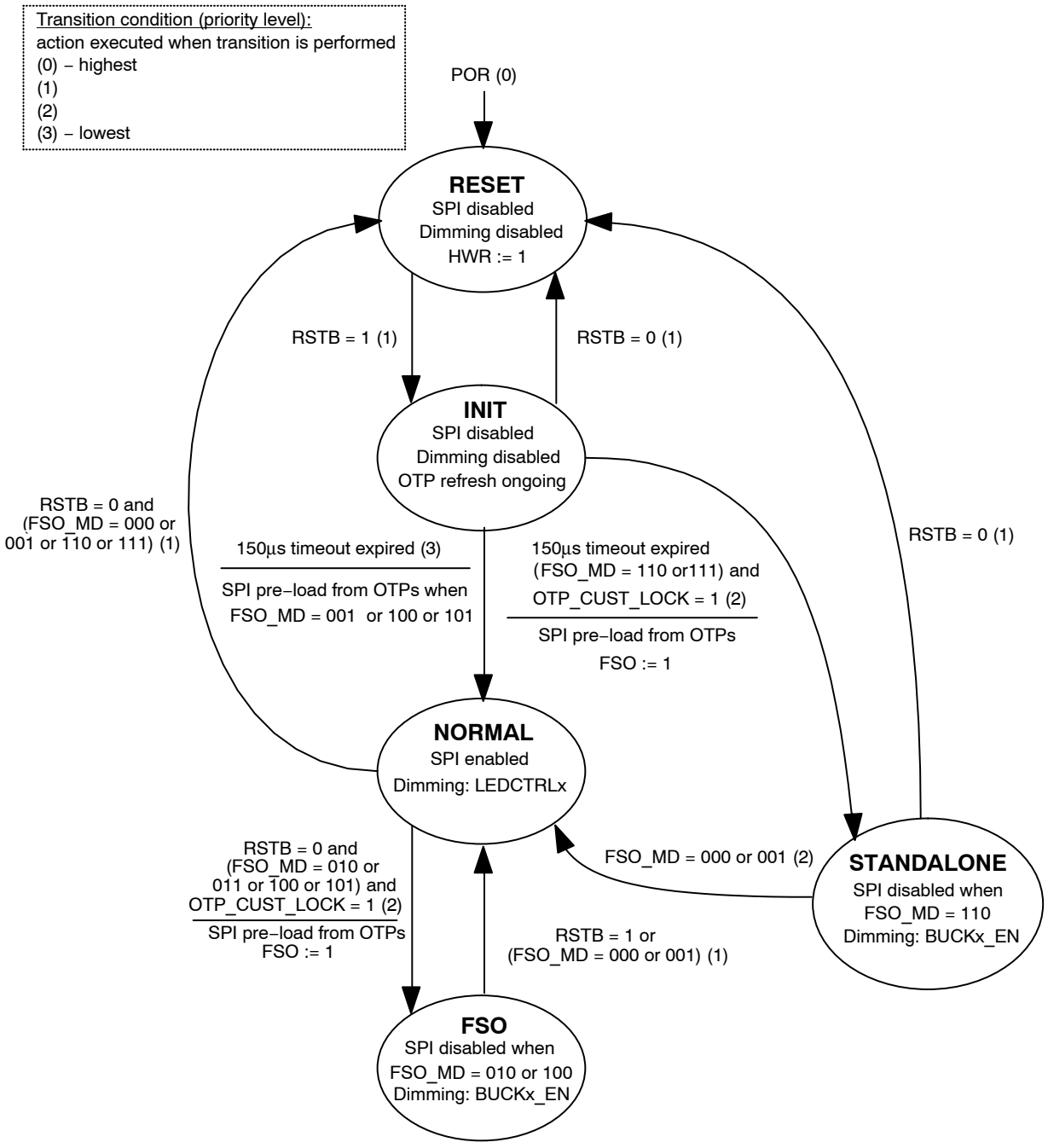

Figure 19. Functional Modes State Diagram

Reset

Asynchronous reset is caused either by POR (POR always causes asynchronous reset − transition to reset state) or by falling edge on RSTB pin (in normal/stand−alone mode, when FSO_MD[2:0] = 000 or 001 or 110 or 111).

Init and Normal mode

Normal mode is entered through Init state after internal delay of 150 µs. In Init state, OTP refresh is performed. If OTP bits for FSO_MD[2:0] register and *OTP Lock Bit* are programmed, transition to FSO/SA mode is possible.

FSO/Stand−Alone Mode

FSO (Fail−Safe Operation)/Stand−Alone modes can be used for two main purposes:

- Default power−up operation of the chip (**Stand−Alone** functionality without external microcontroller or preloading of the registers with default content for default operation before microcontroller starts sending SPI commands for chip settings)
- Fail−Safe functionality (chip functionality definition in fail−safe mode when the external microcontroller functionality is not guaranteed)

FSO/stand−alone function is controlled according to Table 19. Entrance into FSO/Stand−alone mode is possible only after customer OTP zapping when *OTP Lock Bit* is set.

After FSO mode activation, the FSO bit in status register is set. FSO register is cleared by read register.

When FSO/Stand−Alone mode is activated, content of the following SPI registers is preloaded from OTP memory:

BUCK1_VTHR[8:1]
BUCK1_ISENS_THR[1:0]
BUCK2_VTHR[8:1]
BUCK2_ISENS_THR[1:0]
BUCK1_TOFF[4:0]
BUCK2_TOFF[4:0]
BUCK1_EN
BUCK2_EN
FSO_MD[2:0]
BUCK1_TSD_AUT_RCVR_EN
BUCK2_TSD_AUT_RCVR_EN
BUCK_OC_OCCMP_THR[1:0]

BUCKx_ISENS_TRIM[6:0] register is preloaded from corresponding BUCKx_ISENS_RNG[6:0] register.

In FSO (entered via falling edge on RSTB pin) and Stand−Alone modes, *BUCK1_EN* & *BUCK2_EN* are controlled from SPI register map (SPI registers are updated from OTP's after entrance into these modes).

BUCK1_EN and BUCK2_EN are supposed to be set '1' for the BUCKx operation in the FSO/stand−alone mode.

When control registers are pre−loaded from OTP's after POR and FSO mode is not entered (valid for FSO_MD[2:0] = 100 or 101), BUCK1_EN and BUCK2_EN are kept inactive ('0') until the first valid SPI operation is finished (even in FSO mode) to avoid potential activation of buck regulators immediately after POR (to prevent undefined state of LEDCTRLx pins in case MCU leaves POR later than NCV78825).

In FSO and Stand−Alone modes, the logic level at *LEDCTRLx* pins is ignored and external PWM dimming with LEDCTRLx pins is not available. The outputs can be dimmed only by means of BUCKx_EN register.

Prior to entrance into FSO mode, low level on *RSTB* pin always generates reset of digital. Falling edge on RSTB pin may generate either entrance into FSO mode or reset in dependency on FSO_MD[2:0] register value.

Once FSO mode is entered via falling edge on RSTB pin, reset function of RSTB pin is blocked until FSO mode is exited. FSO mode can be exited by the rising edge on RSTB pin or by writing FSO_MD[2:0] = 000 or 001 (possible only in FSO modes, where SPI control register update is allowed: FSO_MD[2:0] = 011 or 101).

In stand−alone mode (FSO_MD[2:0] = 110 or 111), RSTB has always reset functionality.

During entrance into FSO mode, value of FSO_MD[2:0] SPI register (preloaded from OTP at power up only) is latched into internal register and all FSO related functions are then controlled according to it. The purpose is to avoid the reset of the device when FSO mode is active and FSO_MD[2:0] is changed to value corresponding to stand−alone mode, where RSTB pin has reset functionality. The internal register is cleared after POR or when FSO mode is exited.

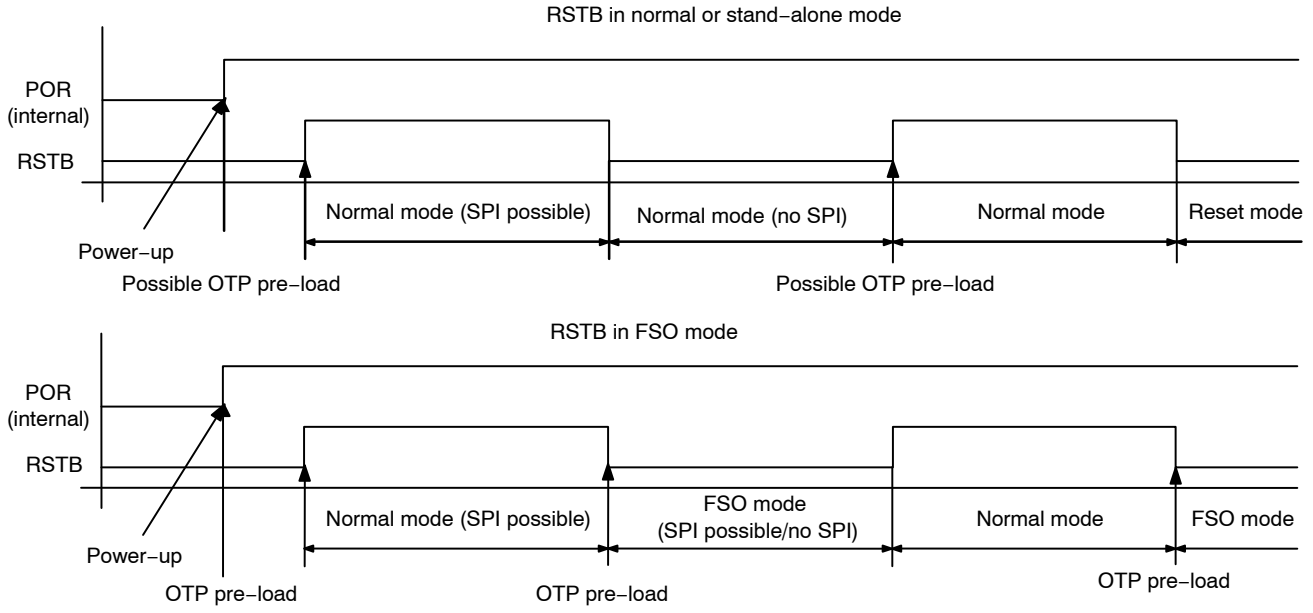

Figure 20. RSTB Pin Functionality in Normal, Stand−alone and FSO Modes

Table 19. FSO MODES

FSO_MD[2:0]	Description
000_b = 0	FSO mode disabled, registers are loaded with safe value = 0x00h after POR, default – After the reset, control registers are loaded with 0x00h value – Entrance into FSO mode is not possible unless dedicated SPI write command to change FSO_MD[2:0] value is sent – RSTB pin has *reset* functionality – LEDCTRLx pins are functional (buck enable/disable, external PWM dimming available)
001_b = 1	FSO mode disabled, registers are loaded with data from OTP memory after POR – After the reset, control registers are loaded with data stored in OTP memory (device's OTP memory has to be programmed, *OTP Lock Bit* has to be set). It reduces number of SPI transfers needed to configure the device after the reset – Entrance into FSO mode is not possible unless dedicated SPI write command to change FSO_MD[2:0] value is sent – RSTB pin has *reset* functionality – LEDCTRLx pins are functional (buck enable/disable, external PWM dimming available)
010_b = 2	FSO entered after falling edge on RSTB pin, registers are loaded with safe value = 0x00h except FSO_MD[2:0] value after POR – After FSO mode activation, control registers are loaded with data stored in OTP memory – SPI register update (SPI write/read operation) in FSO mode is disabled (SPI write operation is blocked; Diagnostig flags clearing of SPI registers is blocked; in case of invalid SPI frame, SPIERR flag is set) – RSTB pin serves to enter/exit FSO mode – LEDCTRLx pins are not functional (buck enable/disable only by means of BUCKx_EN SPI/OTP bits, external PWM dimming not available)
011_b = 3	FSO entered after falling edge on RSTB pin, registers are loaded with safe value = 0x00h except FSO_MD[2:0] value after POR – After FSO mode activation, control registers are loaded with data stored in OTP memory – SPI register update (SPI write/read operation) in FSO mode is *enabled* – FSO mode can be exited by writing FSO_MD[2:0] = 000 or 001 – RSTB pins serves to enter/exit FSO mode – LEDCTRLx pins are not functional (buck enable/disable only by means of BUCKx_EN SPI/OTP bits, external PWM dimming not available)
100_b = 4	FSO entered after falling edge on RSTB pin, registers are loaded with data from OTP memory after POR – After FSO mode activation, control registers are loaded with data stored in OTP memory – SPI register update (SPI write/read operation) in FSO mode is *disabled* (SPI write operation is blocked; Diagnostig flags clearing of SPI registers is blocked; in case of invalid SPI frame, SPIERR flag is set) – RSTB pin serves to enter/exit FSO mode – LEDCTRLx pins are not functional (buck enable/disable only by means of BUCKx_EN SPI/OTP bits, external PWM dimming not available)
101_b = 5	FSO entered after falling edge on RSTB pin, registers are loaded with data from OTP memory after POR – After FSO mode activation, control registers are loaded with data stored in OTP memory – SPI register update (SPI write/read operation) in FSO mode is *enabled* – FSO mode can be exited by writing FSO_MD[2:0] = 000 or 001 – RSTB pin serves to enter/exit FSO mode – LEDCTRLx pins are not functional (buck enable/disable only by means of BUCKx_EN SPI/OTP bits, external PWM dimming not available)
110_b = 6	SA (stand−alone)/FSO entered after POR (RSTB pin rising edge), registers are loaded with data from OTP memory – After SA/FSO mode activation, control registers are loaded with data from OTP memory – SPI register update (SPI write/read operation) in SA/FSO mode is *disabled* (SPI write operation is blocked; Diagnostig flags clearing of SPI registers is blocked; in case of invalid SPI frame, SPIERR flag is set) – RSTB pin has *reset* functionality – LEDCTRLx pins are not functional (buck enable/disable only by means of BUCKx_EN SPI/OTP bits, external PWM dimming not available)
111_b = 7	SA (stand−alone)/FSO entered after POR (RSTB pin rising edge), registers are loaded with data from OTP memory – After SA/FSO mode activation, control registers are loaded with data from OTP memory – SPI register update (SPI write/read operation) in SA/FSO mode is *enabled* – FSO mode can be exited by writing FSO_MD[2:0] = 000 or 001 – RSTB pin has *reset* functionality – LEDCTRLx pins are not functional (buck enable/disable only by means of BUCKx_EN SPI/OTP bits, external PWM dimming not available)

SPI INTERFACE

General

The serial peripheral interface (SPI) is used to allow an external microcontroller (MCU) to communicate with the device. NCV78825 acts always as a slave and it cannot initiate any transmission. The operation of the device is configured and controlled by means of SPI registers, which are observable for read and/or write from the master. The NCV78825 SPI transfer size is 16 bits.

During an SPI transfer, the data is simultaneously transmitted (shifted out serially) and received (shifted in serially). A serial clock line (CLK) synchronizes shifting and sampling of the information on the two serial data lines: SDO and SDI. The SDO signal is the output from the Slave (NCV78825), and the SDI signal is the output from the Master.

A slave or chip select line (CSB) allows individual selection of a slave SPI device in a time multiplexed multiple−slave system.

The CSB line is active low. If an NCV78825 is not selected, SDO is in high impedance state and it does not interfere with SPI bus activities. Since the NCV78825 always clocks data out on the falling edge and samples data in on rising edge of clock, the MCU SPI port must be configured to match this operation.

The implemented SPI allows connection to multiple slaves by means of star connection (CSB per slave) or by means of daisy chain.

An SPI star connection requires a bus = (3 + N) total lines, where N is the number of Slaves used, the SPI frame length is 16 bits per communication.

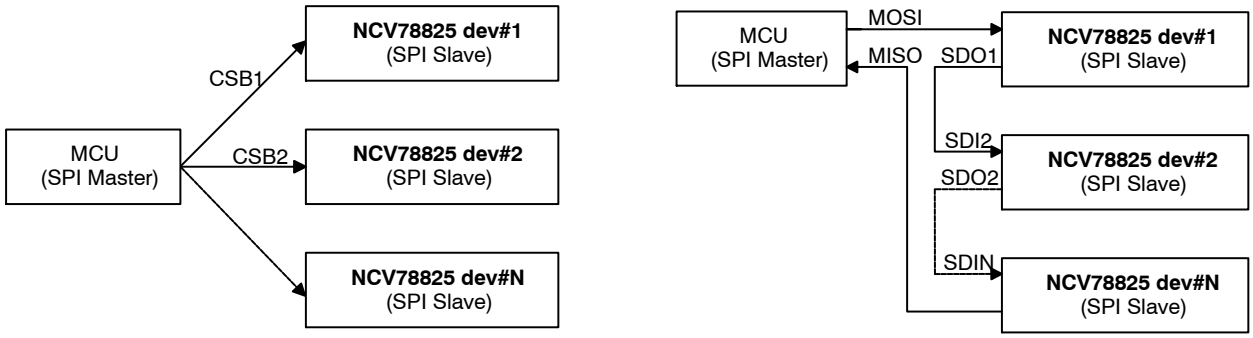

Figure 21. SPI Star vs. Daisy Chain Connection

SPI Daisy Chain Mode

SPI daisy chain connection bus width is always four lines independently on the number of slaves. However, the SPI transfer frame length will be a multiple of the base frame length so N × 16 bits per communication: the data will be interpreted and read in by the devices at the moment the CSB rises.

A diagram showing the data transfer between devices in daisy chain connection is given further: CMDx represents the 16−bit command frame on the data input line transmitted by the Master, shifting via the chips' shift registers through the daisy chain. The chips interpret the command once the chip select line rises.

The NCV78825 default power up communication mode is "star". In order to enable daisy chain mode, a multiple of 16 bits clock cycles must be sent to the devices. It is recommended to keep SDI line low during this first SPI frame. In order to come back to star mode the NOP register (address 0x00) must be written with all ones, with the proper data parity bit and parity framing bit: see SPI protocol for details about parity and write operation.

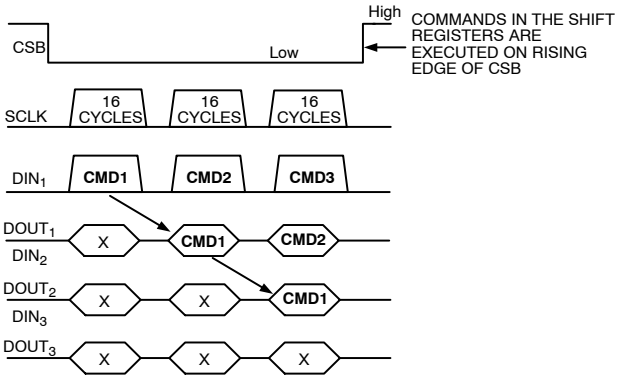

Figure 22. SPI Daisy Chain Data Shift Between Slaves. The symbol 'x' Represents the Previous Content of the SPI Shift Register Buffer

SPI Transfer Format

Two types of SPI commands (to SDI pin of NCV78825) from the micro controller can be distinguished: “Write to a control register” and “Read from register (control or status)”.

The frame protocol for the *write operation*:

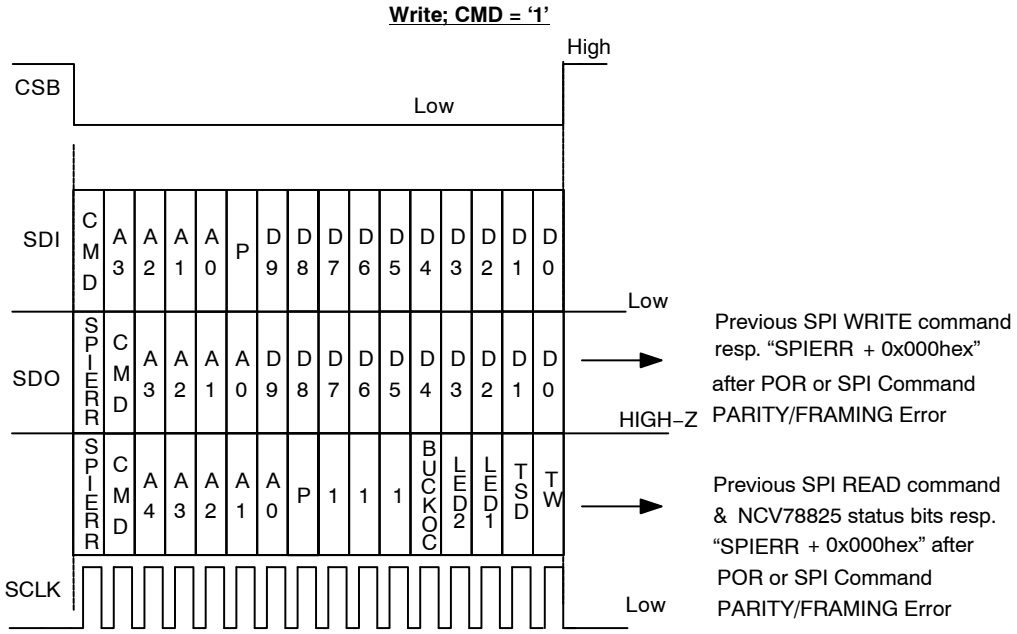

P = not (CMD xor A3 xor A2 xor A1 xor A0 xor D9 xor D8 xor D7 xor D6 xor D5 xor D4 xor D3 xor D2 xor D1 xor D0)

Figure 23. SPI Write Frame

Referring to the previous picture, the write frame coming from the master (into the SDI) is composed from the following fields:

- Bit[15] (MSB): CMD bit = 1 for write operation
- Bits[14:11]: 4 bits WRITE ADDRESS field
- Bit[10]: frame parity bit. It is ODD parity formed by the negated XOR of all other bits in the frame
- Bits[9:0]: 10 bit DATA to write

Device in the same time replies to the master (on the SDO):

- If the previous command was a write and no SPI error had occurred, a copy of the command, address and data written fields
- If the previous command was a read, the response frame summarizes the address used and an overall diagnostic check (copy of the main detected errors, see Figure 23 and Figure 24 for details)
- In case of previous SPI error, only the MSB bit will be 1, followed by zeros
- After power−on−reset all bits are zero

If parity bit in the frame is wrong, device will not perform command and <SPI> flag will be set.

The frame protocol for the *read operation*:

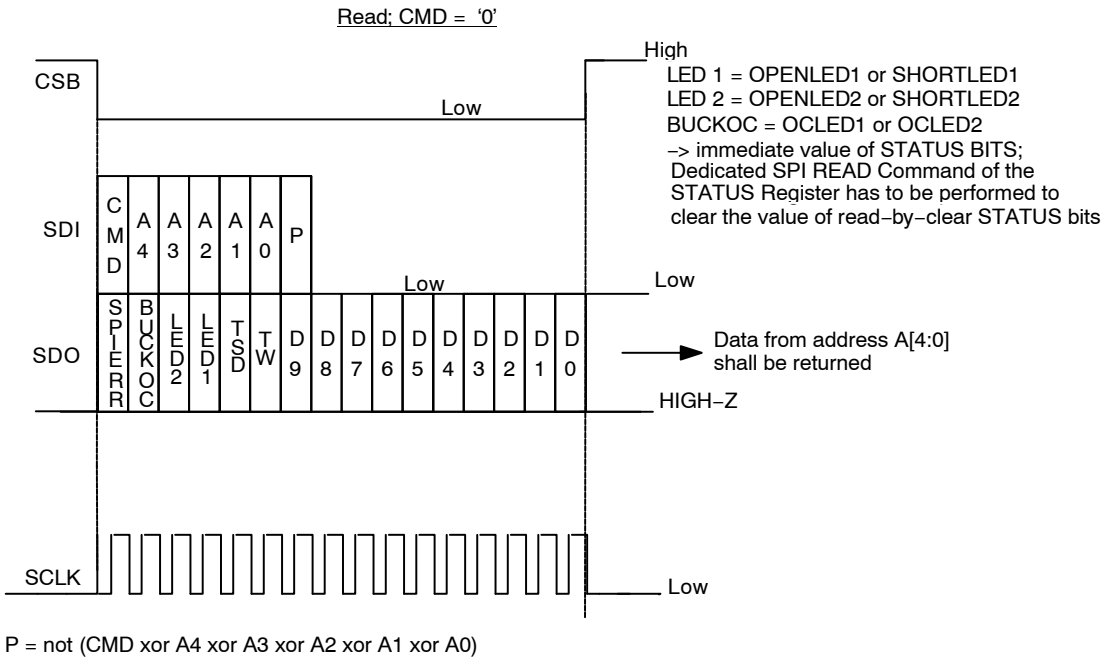

Figure 24. SPI Read Frame

Referring to the previous picture, the read frame coming from the master (into the SDI) is composed from the following fields:

- Bit[15] (MSB): CMD bit = 0 for read operation
- Bits[14:10]: 5 bits READ ADDRESS field
- Bit[10]: frame parity bit. It is ODD parity formed by the negated XOR of all other bits in the frame
- Bits [8:0]: 9 bits zeroes field

Device in the same frame provides to the master (on the SDO) data from the required address (in frame response), thus achieving the lowest communication latency.

SPI Framing and Parity Error

SPI communication framing error is detected by the NCV78825 in the following situations:

- Not an integer multiple of 16 CLK pulses are received during the active–low CSB signal
- LSB bits (8..0) of a read command are not all zero
- SPI parity errors, either on write or read operation

Once an SPI error occurs, the <SPI> flag can be reset only by reading the status register in which it is contained (using in the read frame the right communication parity bit).

SPI ADDRESS MAP

Table 20. NCV78825 SPI ADDRESS MAP

ADDR	R/W	bit9	bit8	bit7	bit6	bit5	bit4	bit3	bit2	bit1	bit0
0x00	NA	NOP Register (Read/Write Operation Ignored)									
0x01	R/W	0x0	BUCK1_VTHR[8:0]								
0x02	R/W	0x0	BUCK2_VTHR[8:0]								
0x03	R/W	0x0		LS1_VLEDLOW _ENA	LS2_VLEDLOW _ENA	BUCK1_ISENS_THR[2:0]			BUCK2_ISENS_THR[2:0]		
0x04	R/W	BUCK1_TOFF[4:0]				BUCK2_TOFF[4:0]					
0x05	R/W	BUCK1_OFF _CMP_DIS	BUCK2_OFF _CMP_DIS	DRV_SLOW_EN	BUCK_OC_OCCMP_THR[1:0]		FSO_MD[2:0]			BUCK1_EN	BUCK2_EN
0x06	R/W	BUCK_SYNC	LS1_NO_MD[1:0]		LS2_NO_MD[1:0]		LS1_DRV_ENA	LS2_DRV_ENA	LS1_IREV_NOCTRL	LS2_IREV_NOCTRL	x_BANK_SEL
0x07	R/W	BUCK1_TSD _AUT_RCVR_EN	BUCK2_TSD _AUT_RCVR_EN	THERMAL_WARNING_THR[7:0]							
0x08	R/W	VTEMP_OFF_COMP ODD PAR.*	LED_SEL_DUR[8:0]								
0x09	R/W	VTEMP_OFF_COMP[2:0]*			BUCK1_ISENS_TRIM[6:0]						
0x0A	R/W	VTEMP_OFF_COMP[5:3]*			BUCK2_ISENS_TRIM[6:0]						
0x0B	R/W	ADC_VLED1_RNG_SEL[1:0]		ADC_VLED2_RNG_SEL[1:0]		OTP_BIAS_H	OTP_BIAS_L	OTP_ADDR[1:0]		OTP_OPERATION[1:0]	
0x0C	R	0x0	ODD PARITY	VLED1ON[7:0]							
0x0D	R	0x0	ODD PARITY	VLED2ON[7:0]							
0x0E	R	0x0	ODD PARITY	VLED1[7:0]							
0x0F	R	0x0	ODD PARITY	VLED2[7:0]							
0x10	R	0x0	ODD PARITY	VTEMP[7:0]							
0x11	R	0x0	ODD PARITY	VBOOST[7:0]							
0x12	R	0x0	ODD PARITY	VDD[7:0]							
0x13	R	0x0	ODD PARITY	BUCK1_TON_DUR[7:0]							
0x14	R	0x0	ODD PARITY	BUCK2_TON_DUR[7:0]							
0x15	R	0x0	ODD PARITY	0x0		OPENLED1	SHORTLED1	OCLED1	OPENLED2	SHORTLED2	OCLED2
0x16	R	0x0	ODD PARITY	OTP_FAIL	FSO	HWR	LED1VAL	LED2VAL	SPIERR	TSD	TW
0x17	R	0x0	ODD PARITY	0x0			OTP_ACTIVE	BUCK1_MIN_TON	BUCK2_MIN_TON	BUCK1_STATUS	BUCK2_STATUS
0x18	R	0x0	ODD PARITY	0x0	BUCKx_ISENS_RNG[6:0]						
0x19	R	0x0	ODD PARITY	BUCKx_ISENS_D2[3:0]				BUCKx_ISENS_D1[3:0]			
0x1A	R	0x0	ODD PARITY	BUCKx_ISENS_D4[3:0]				BUCKx_ISENS_D3[3:0]			
0x1B	R	0x0	ODD PARITY	BUCK_ISENS_TC1[3:0]				BUCK_ISENS_TC0[3:0]			
0x1C	R	0x0	ODD PARITY	BUCK_ISENS_TC3[3:0]				BUCK_ISENS_TC2[3:0]			
0x1D	R	0x0	ODD PARITY	0x0				BUCK_ISENS_TC4[3:0]			
0x1E	R	OTP_DATA[9:0]									
0x1F	R	0x0	REVID[8:0]								
OTHER	R	0x0									

*Read only.

SPI Register Details

Table 21. NOP REGISTER 0x00

NOP Register 0x00											
Address		Bit 9	Bit 8	Bit 7	Bit 6	Bit 5	Bit 4	Bit 3	Bit 2	Bit 1	Bit 0
0x00	Name	NOP[9:0]									
	Reset	0	0	0	0	0	0	0	0	0	0
	Access	R/W	R/W	R/W	R/W	R/W	R/W	R/W	R/W	R/W	R/W

1. NOP[9:0]: No Operation register. Always reads zero.
   When SPI in daisy chain mode, writing all ones will force a change to SPI star mode.

Table 22. BUCK1 PEAK CURRENT SETTINGS REGISTER 0x01

BUCK1 Peak Current Settings Register 0x01											
Address		Bit 9	Bit 8	Bit 7	Bit 6	Bit 5	Bit 4	Bit 3	Bit 2	Bit 1	Bit 0
0x01	Name	0	BUCK1_VTHR[8:0]								
	Reset	0	0, FSO	0, FSO	0, FSO	0, FSO	0, FSO	0, FSO	0, FSO	0, FSO	0
0x01	Access	R/W	R/W	R/W	R/W	R/W	R/W	R/W	R/W	R/W	R/W

1. BUCK1_VTHR[8:0] – Buck 1 Peak Current value settings.

Value	Range1	Range 2	Range 3	Range 4	Range 5
0	29.30 mA	58.59 mA	117.19 mA	234.38 mA	468.75 mA
219	117.19 mA	234.38 mA	468.75 mA	937.5 mA	1875 mA
511	234.38 mA	468.75 mA	937.5 mA	1875 mA	3750 mA
Step	0.4 mA	0.8 mA	1.61 mA	3.21 mA	6.42 mA

2. Range selection is related to value written in BUCK1_ISENS_THR[2:0] bits.

Table 23. BUCK 2 PEAK CURRENT SETTINGS REGISTER 0x02

BUCK 2 Peak Current Settings Register 0x02											
Address		Bit 9	Bit 8	Bit 7	Bit 6	Bit 5	Bit 4	Bit 3	Bit 2	Bit 1	Bit 0
0x02	Name	0	BUCK2_VTHR[8:0]								
	Reset	0	0, FSO	0,FSO	0,FSO	0, FSO	0, FSO	0, FSO	0, FSO	0, FSO	0
	Access	R/W	R/W	R/W	R/W	R/W	R/W	R/W	R/W	R/W	R/W

1. BUCK2_VTHR[8:0] – Buck 2 Peak Current value settings.

Value	Range1	Range 2	Range 3	Range 4	Range 5
0	29.30 mA	58.59 mA	117.19 mA	234.38 mA	468.75 mA
219	117.19 mA	234.38 mA	468.75 mA	937.5 mA	1875 mA
511	234.38 mA	468.75 mA	937.5 mA	1875 mA	3750 mA
Step	0.4 mA	0.8 mA	1.61 mA	3.21 mA	6.42 mA

2. Range selection is related to value written in BUCK2_ISENS_THR[2:0] bits.

Table 24. BUCK PEAK CURRENT RANGE SETTINGS REGISTER 0x03

BUCK Peak Current Range Settings Register 0x03											
Address		Bit 9	Bit 8	Bit 7	Bit 6	Bit 5	Bit 4	Bit 3	Bit 2	Bit 1	Bit 0
0x03	Name	0	0	LS1_VLEDLOW_ENA	LS2_VLEDLOW_ENA	BUCK1_ISENS_THR[2:0]			BUCK2_ISENS_THR[2:0]		
	Reset	0	0	0	0	0	0, FSO	0, FSO	0	0, FSO	0, FSO
	Access	R/W	R/W	R/W	R/W	R/W	R/W	R/W	R/W	R/W	R/W

1. LS1_VLEDLOW_ENA
   Buck 1 Low Side Pre−driver Enable bit for low VLED voltage (< 1.8 V typ.).
   0: LS1 Pre−driver disabled for low VLED.
   1: LS1 Pre−driver enabled for low VLED.
2. LS2_VLEDLOW_ENA
   Buck 2 Low Side Pre−driver Enable bit for low VLED voltage (< 1.8 V typ.).
   0: LS2 Pre−driver disabled for low VLED.
   1: LS2 Pre−driver enabled for low VLED.

3. BUCK1_ISENS_THR[2:0]
   Buck 1 Peak Current Range selection.
   000: Range 1
   001: Range 2
   010: Range 3
   011: Range 4
   100: Range 5
   The range setting will be applied only after the writing BUCK1 Peak Current value in BUCK1_VTHR[8:0] bits.
4. BUCK2_ISENS_THR[2:0]
   Buck 2 Peak Current Range selection.
   000: Range 1
   001: Range 2
   010: Range 3
   011: Range 4
   100: Range 5
   The range setting will be applied only after the writing BUCK2 Peak Current value in BUCK2_VTHR[8:0] bits.

Table 25. BUCK TOFF SETTINGS REGISTER 0x04

BUCK TOFF Settings Register 0x04											
Address		Bit 9	Bit 8	Bit 7	Bit 6	Bit 5	Bit 4	Bit 3	Bit 2	Bit 1	Bit 0
0x04	Name	BUCK1_TOFF[4:0]					BUCK2_TOFF[4:0]				
	Reset	0, FSO	0, FSO	0, FSO	0, FSO	0, FSO	0, FSO	0, FSO	0, FSO	0, FSO	0, FSO
	Access	R/W	R/W	R/W	R/W	R/W	R/W	R/W	R/W	R/W	R/W

1. BUCK1_TOFF[4:0] – Buck 1 Time Constant settings (TOFF*VCOIL) for keeping inductor ripple current.
   0: 50.0 µs.V 11: 22.1 µs.V 22: 9.75 µs.V
   1: 46.4 µs.V 12: 20.5 µs.V 23: 9.05 µs.V
   2: 43.1 µs.V 13: 19.0 µs.V 24: 8.41 µs.V
   3: 40.0 µs.V 14: 17.7 µs.V 25: 7.8 µs.V
   4: 37.1 µs.V 15: 16.4 µs.V 26: 7.25 µs.V
   5: 34.5 µs.V 16: 15.2 µs.V 27: 6.73 µs.V
   6: 32.0 µs.V 17: 14.1 µs.V 28: 6.25 µs.V
   7: 29.7 µs.V 18: 13.1 µs.V 29: 5.80 µs.V
   8: 27.6 µs.V 19: 12.2 µs.V 30: 5.38 µs.V
   9: 25.6 µs.V 20: 11.3 µs.V 31: 5.00 µs.V
   10: 23.8 µs.V 21: 10.5 µs.V
2. BUCK2_TOFF[4:0] – Buck 2 Time Constant settings (TOFF*VCOIL) for keeping inductor ripple current.
   0: 50.0 µs.V 11: 22.1 µs.V 22: 9.75 µs.V
   1: 46.4 µs.V 12: 20.5 µs.V 23: 9.05 µs.V
   2: 43.1 µs.V 13: 19.0 µs.V 24: 8.41 µs.V
   3: 40.0 µs.V 14: 17.7 µs.V 25: 7.8 µs.V
   4: 37.1 µs.V 15: 16.4 µs.V 26: 7.25 µs.V
   5: 34.5 µs.V 16: 15.2 µs.V 27: 6.73 µs.V
   6: 32.0 µs.V 17: 14.1 µs.V 28: 6.25 µs.V
   7: 29.7 µs.V 18: 13.1 µs.V 29: 5.80 µs.V
   8: 27.6 µs.V 19: 12.2 µs.V 30: 5.38 µs.V
   9: 25.6 µs.V 20: 11.3 µs.V 31: 5.00 µs.V
   10: 23.8 µs.V 21: 10.5 µs.V

Table 26. BUCK SETTINGS REGISTER 0x05

BUCK Settings Register 0x05											
Address		Bit 9	Bit 8	Bit 7	Bit 6	Bit 5	Bit 4	Bit 3	Bit 2	Bit 1	Bit 0
0x05	Name	BUCK1_OFF_CMP_DIS	BUCK2_OFF_CMP_DIS	DRV_SLOW_EN	BUCK_OC_OCCMP_THR[1:0]		FSO_MD[2:0]			BUCK1_EN	BUCK2_EN
	Reset	0	0	0	0, FSO	0, FSO	0, FSO	0, FSO	0, FSO	0, FSO	0, FSO
	Access	R/W	R/W	R/W	R/W	R/W	R/W	R/W	R/W	R/W	R/W

1. BUCK1_OFF_CMP_DIS – Buck 1 Peak current Comparator Offset Cancellation function.
   0: Offset compensation enabled
   1: Offset compensation disabled
2. BUCK2_OFF_CMP_DIS – Buck 2 Peak current Comparator Offset Cancellation function.
   0: Offset compensation enabled
   1: Offset compensation disabled
3. DRV_SLOW_EN – High Side drivers slopes settings.
   0: Normal slopes
   1: Slow slopes
4. BUCK_OC_OCCMP_THR[1:0] – Over−current Detection Setting
   00: Over−current must be valid for more than 1 switching period
   01: Over−current must be valid for more than 2 switching period
   10: Over−current must be valid for more than 3 switching period
   11: Over−current must be valid for more than 4 switching period

5. FSO_MD[2:0] – Fail−Safe Operation / Stand−Alone mode selection (See Table 19 for details).
   000: FSO mode disabled, Registers loaded with Safe values,
   001: FSO mode disabled, Registers loaded from OTP memory
   010: FSO mode enabled, Registers loaded with Safe values
   011: FSO mode enabled, Registers loaded with Safe values, SPI update in FSO
   100: FSO mode enabled, Registers loaded from OTP memory
   101: FSO mode enabled, Registers loaded from OTP memory, SPI update in FSO
   110: Stand−alone mode, Registers loaded from OTP memory
   111: Stand−alone mode, Registers loaded from OTP memory, SPI update in FSO
6. BUCK1_EN – Buck Regulator Channel 1 Enable bit.
   0: Buck 1 disabled
   1: Buck 1 enabled
7. BUCK2_EN – Buck Regulator Channel 2 Enable bit.
   0: Buck 2 disabled
   1: Buck 1 enabled

Table 27. BUCK SETTINGS REGISTER 0x06

BUCK Settings Register 0x06											
Address		Bit 9	Bit 8	Bit 7	Bit 6	Bit 5	Bit 4	Bit 3	Bit 2	Bit 1	Bit 0
0x06	Name	BUCK_SYNC	LS1_NO_MD[1:0]		LS2_NO_MD[1:0]		LS1_DRV_ENA	LS2_DRV_ENA	LS1_IREV_NOCTRL	LS2_IREV_NOCTRL	x_BANK_SEL
	Reset	0	0	0	0	0	0	0	0	0	0
	Access	R/W	R/W	R/W	R/W	R/W	R/W	R/W	R/W	R/W	R/W

1. BUCK_SYNC – Activation of the Bucks synchronous operation.
   0: Normal mode – Bucks synchronous operation Disabled
   1: Master−slave mode – Bucks synchronous operation Enabled
2. LS1_NO_MD[1:0] – Buck 1 Low Side Pre−driver Non−overlap mode LS to HS selection.
   00: Adaptive mode, 30 ns dead time
   01: Adaptive mode, min 1% of TOFF time
   10: Fixed mode, 2.5% of TOFF time
   11: Fixed mode, 5% of TOFF time
3. LS2_NO_MD[1:0] – Buck 2 Low Side Pre−driver Non−overlap mode LS to HS selection.
   00: Adaptive mode, 30 ns dead time
   01: Adaptive mode, min 1% of TOFF time
   10: Fixed mode, 2.5% of TOFF time
   11: Fixed mode, 5% of TOFF time
4. LS1_DRV_ENA – Buck 1 Low Side Pre−driver Enable bit.
   0: LS1 Pre−driver disabled – asynchronous operation mode.
   1: LS1 Pre−driver enabled – synchronous operation mode.
5. LS2_DRV_ENA – Buck 2 Low Side Pre−driver Enable bit.
   0: LS2 Pre−driver disabled – asynchronous operation mode.
   1: LS2 Pre−driver enabled – synchronous operation mode.
6. LS1_IREV_NOCTR – Buck 1 Low Side Pre−driver Reverse Current Control bit.
   0: LS1 switched off if zero current detected
   1: LS1 active till end of TOFF regardless of zero current detection
7. LS2_IREV_NOCTRL – Buck 2 Low Side Pre−driver Reverse Current Control bit.
   0: LS2 switched off if zero current detected
   1: LS2 active till end of TOFF regardless of zero current detection
8. x_BANK_SEL – Buck Channel selector for reading of trimming constants stored at register addresses 0x18, 0x19 and 0x1A related to selected Buck.
   0: Buck 1 selected
   1: Buck 2 selected

Table 28. BUCK SETTINGS REGISTER 0x07

BUCK Settings Register 0x07											
Address		Bit 9	Bit 8	Bit 7	Bit 6	Bit 5	Bit 4	Bit 3	Bit 2	Bit 1	Bit 0
0x07	Name	BUCK1_TSD_AUT_RCVR_EN	BUCK2_TSD_AUT_RCVR_EN	THERMAL_WARNING_THR[7:0]							
0x07	Reset	0, FSO	0, FSO	1	0	1	1	0	0	1	1
	Access	R/W	R/W	R/W	R/W	R/W	R/W	R/W	R/W	R/W	R/W

1. BUCK1_TSD_AUT_RCVR_EN – Enable bit for Buck 1 Automatic Recovery after Thermal Shutdown.
   0: Disabled
   1: Enabled
2. BUCK2_TSD_AUT_RCVR_EN – Enable bit for Buck 2 Automatic Recovery after Thermal Shutdown.
   0: Disabled
   1: Enabled
3. THERMAL_WARNING_THR[7:0] – Thermal Warning Threshold Settings.

Table 29. BUCK SETTINGS REGISTER 0x08

BUCK Settings Register 0x08											
Address		Bit 9	Bit 8	Bit 7	Bit 6	Bit 5	Bit 4	Bit 3	Bit 2	Bit 1	Bit 0
0x08	Name	VTEMP_OFF_COMP ODD PAR.	LED_SEL_DUR[8:0]								
	Reset	X	0	0	0	0	0	0	0	0	0
	Access	R	R/W	R/W	R/W	R/W	R/W	R/W	R/W	R/W	R/W

1. VTEMP_OFF_COMP ODD PAR. ADC VTEMP Trimming Parity Bit.
2. LED_SEL_DUR[8:0] – VLEDxON and VLEDx Measurement Settings
   0: No VLEDxON, VLEDx measurements are performed
   1–511: VLEDxON, VLEDx enabled with selected time interval (1LSB = 32 μs)

Table 30. BUCK SETTINGS REGISTER 0x09

BUCK Settings Register 0x09											
Address		Bit 9	Bit 8	Bit 7	Bit 6	Bit 5	Bit 4	Bit 3	Bit 2	Bit 1	Bit 0
0x09	Name	VTEMP_OFF_COMP[2:0]			BUCK1_ISENS_TRIM[6:0]						
	Reset	X	X	X	X	X	X	X	X	X	X
	Access	R	R	R	R/W	R/W	R/W	R/W	R/W	R/W	R/W

1. VTEMP_OFF_COMP[2:0] – ADC VTEMP Trimming Value.
2. BUCK1_ISENS_TRIM[6:0]
   Compensation of the Buck 1 Peak Current – Trimming code.
   Preloaded by BUCK1_ISENS_RNG[6:0].

Table 31. BUCK SETTINGS REGISTER 0x0A

BUCK Settings Register 0x0A											
Address		Bit 9	Bit 8	Bit 7	Bit 6	Bit 5	Bit 4	Bit 3	Bit 2	Bit 1	Bit 0
0x0A	Name	VTEMP_OFF_COMP[5:3]			BUCK2_ISENS_TRIM[6:0]						
	Reset	X	X	X	X	X	X	X	X	X	X
	Access	R	R	R	R/W	R/W	R/W	R/W	R/W	R/W	R/W

1. VTEMP_OFF_COMP[2:0] – ADC VTEMP Trimming Value.
2. BUCK2_ISENS_TRIM[6:0]
   Compensation of the Buck 2 Peak Current – Trimming code.
   Preloaded by BUCK2_ISENS_RNG[6:0].

Table 32. BUCK SETTINGS REGISTER 0x0B

BUCK Settings Register 0x0B											
Address		Bit 9	Bit 8	Bit 7	Bit 6	Bit 5	Bit 4	Bit 3	Bit 2	Bit 1	Bit 0
0x0B	Name	ADC_VLED1_RNG_SEL[1:0]		ADC_VLED2_RNG_SEL[1:0]		OTP_BIAS_H	OTP_BIAS_L	OTP_ADDR[1:0]		OTP_OPERATION[1:0]	
	Reset	0	0	0	0	0	0	0	0	0	0
	Access	R/W	R/W	R/W	R/W	R/W	R/W	R/W	R/W	R/W	R/W

1. ADC_VLED1_RNG_SEL[1:0] – Range Selector for VLED1 and VLED1ON ADC measurements.
   00: 70 V
   01: 50 V
   10: 40 V
   11: 30 V
2. ADC_VLED2_RNG_SEL[1:0] – Range Selector for VLED2 and VLED2ON ADC measurements.
   00: 70 V
   01: 50 V
   10: 40 V
   11: 30 V
3. OTP_BIAS_H – OTP Bias High
4. OTP_BIAS_L – OTP Bias Low
5. OTP_ADDR[1:0] – OTP Address
6. OTP_OPERATION[1:0] – OTP Operation.
   00: No Operation
   01: OTP Refresh
   10: OTP Zap
   11: No Operation

Table 33. ADC READING REGISTER 0x0C

ADC Reading Register 0x0C											
Address		Bit 9	Bit 8	Bit 7	Bit 6	Bit 5	Bit 4	Bit 3	Bit 2	Bit 1	Bit 0
0x0C	Name	0	ODD PARITY	VLED1ON[7:0]							
	Reset	0	1	0	0	0	0	0	0	0	0
	Access	R	R	R	R	R	R	R	R	R	R

1. ODD PARITY − Odd Parity Bit over VLED1ON[7:0] bits.
2. VLED1ON[7:0] − VLED1 Measurement Value from ADC when LEDCTRL1 pin is high and LED_SEL_DUR[8:0] > 0
   Conversion ratio:
   0.2745 V/dec if ADC_VLED1_RNG_SEL[1:0] = 0
   0.1961 V/dec if ADC_VLED1_RNG_SEL[1:0] = 1
   0.1569 V/dec if ADC_VLED1_RNG_SEL[1:0] = 2
   0.1176 V/dec if ADC_VLED1_RNG_SEL[1:0] = 3

Table 34. ADC READING REGISTER 0x0D

ADC Reading Register 0x0D											
Address		Bit 9	Bit 8	Bit 7	Bit 6	Bit 5	Bit 4	Bit 3	Bit 2	Bit 1	Bit 0
0x0D	Name	0	ODD PARITY	VLED2ON[7:0]							
	Reset	0	1	0	0	0	0	0	0	0	0
	Access	R	R	R	R	R	R	R	R	R	R

1. ODD PARITY − Odd Parity Bit over VLED2ON[7:0] bits.
2. VLED2ON[7:0] − VLED2 Measurement Value from ADC when LEDCTRL2 pin is high and LED_SEL_DUR[8:0] > 0
   Conversion ratio:
   0.2745 V/dec if ADC_VLED2_RNG_SEL[1:0] = 0
   0.1961 V/dec if ADC_VLED2_RNG_SEL[1:0] = 1
   0.1569 V/dec if ADC_VLED2_RNG_SEL[1:0] = 2
   0.1176 V/dec if ADC_VLED2_RNG_SEL[1:0] = 3

Table 35. ADC READING REGISTER 0x0E

ADC Reading Register 0x0E											
Address		Bit 9	Bit 8	Bit 7	Bit 6	Bit 5	Bit 4	Bit 3	Bit 2	Bit 1	Bit 0
0x0E	Name	0	ODD PARITY	VLED1[7:0]							
	Reset	0	1	0	0	0	0	0	0	0	0
	Access	R	R	R	R	R	R	R	R	R	R

1. ODD PARITY − Odd Parity Bit over VLED1[7:0] bits.
2. VLED1[7:0] − VLED1 Measurement Value from ADC when LED_SEL_DUR[8:0] > 0
   Conversion ratio:
   0.2745 V/dec if ADC_VLED1_RNG_SEL[1:0] = 0
   0.1961 V/dec if ADC_VLED1_RNG_SEL[1:0] = 1
   0.1569 V/dec if ADC_VLED1_RNG_SEL[1:0] = 2
   0.1176 V/dec if ADC_VLED1_RNG_SEL[1:0] = 3

Table 36. ADC READING REGISTER 0x0F

ADC Reading Register 0x0F											
Address		Bit 9	Bit 8	Bit 7	Bit 6	Bit 5	Bit 4	Bit 3	Bit 2	Bit 1	Bit 0
0x0F	Name	0	ODD PARITY	VLED2[7:0]							
	Reset	0	1	0	0	0	0	0	0	0	0
	Access	R	R	R	R	R	R	R	R	R	R

1. ODD PARITY − Odd Parity Bit over VLED2[7:0] bits.
2. VLED2[7:0] − VLED2 Measurement Value from ADC when LED_SEL_DUR[8:0] > 0
   Conversion ratio:
   0.2745 V/dec if ADC_VLED2_RNG_SEL[1:0] = 0
   0.1961 V/dec if ADC_VLED2_RNG_SEL[1:0] = 1
   0.1569 V/dec if ADC_VLED2_RNG_SEL[1:0] = 2
   0.1176 V/dec if ADC_VLED2_RNG_SEL[1:0] = 3

Table 37. ADC READING REGISTER 0x10

ADC Reading Register 0x10											
Address		Bit 9	Bit 8	Bit 7	Bit 6	Bit 5	Bit 4	Bit 3	Bit 2	Bit 1	Bit 0
0x10	Name	0	ODD PARITY	VTEMP[7:0]							
	Reset	0	X	X	X	X	X	X	X	X	X
	Access	R	R	R	R	R	R	R	R	R	R

1. ODD PARITY – Odd Parity Bit over VTEMP[7:0] bits.
2. VTEMP[7:0] – On−chip Temperature measurement
   Conversion ratio:
   Tj = (VTEMP[7:0] − 50.5) / 0.805 [°C]

Table 38. ADC READING REGISTER 0x11

ADC Reading Register 0x11											
Address		Bit 9	Bit 8	Bit 7	Bit 6	Bit 5	Bit 4	Bit 3	Bit 2	Bit 1	Bit 0
0x11	Name	0	ODD PARITY	VBOOST[7:0]							
	Reset	0	X	X	X	X	X	X	X	X	X
	Access	R	R	R	R	R	R	R	R	R	R

1. ODD PARITY – Odd Parity Bit over VBOOST[7:0] bits.
2. VBOOST[7:0] – VBOOST Voltage Measurement Value from ADC.
   Conversion ratio: 0.2745 V/dec.

Table 39. ADC READING REGISTER 0x12

ADC Reading Register 0x12											
Address		Bit 9	Bit 8	Bit 7	Bit 6	Bit 5	Bit 4	Bit 3	Bit 2	Bit 1	Bit 0
0x12	Name	0	ODD PARITY	VDD[7:0]							
	Reset	0	X	X	X	X	X	X	X	X	X
	Access	R	R	R	R	R	R	R	R	R	R

1. ODD PARITY – Odd Parity Bit over VDD[7:0] bits.
2. VDD[7:0] – VDD Voltage Measurement Value from ADC.
   Conversion ratio: 0.0157 V/dec.

Table 40. BUCK 1 TON DURATION REGISTER 0x13

BUCK 1 TON Duration Register 0x13											
Address		Bit 9	Bit 8	Bit 7	Bit 6	Bit 5	Bit 4	Bit 3	Bit 2	Bit 1	Bit 0
0x13	Name	0	ODD PARITY	BUCK1_TON_DUR[7:0]							
	Reset	0	1	0	0	0	0	0	0	0	0
	Access	R	R	R	R	R	R	R	R	R	R

1. ODD PARITY – Odd Parity Bit over BUCK1_TON_DUR[7:0] bits.
2. BUCK1_TON_DUR[7:0] – Last measured Buck 1 TON time duration.
   Conversion ratio: 200 ns/dec.

Table 41. BUCK 2 TON DURATION REGISTER 0x14

BUCK 2 TON Duration Register 0x14											
Address		Bit 9	Bit 8	Bit 7	Bit 6	Bit 5	Bit 4	Bit 3	Bit 2	Bit 1	Bit 0
0x14	Name	0	ODD PARITY	BUCK2_TON_DUR[7:0]							
	Reset	0	1	0	0	0	0	0	0	0	0
	Access	R	R	R	R	R	R	R	R	R	R

1. ODD PARITY – Odd Parity Bit over BUCK2_TON_DUR[7:0] bits.
2. BUCK2_TON_DUR[7:0] – Last measured Buck 2 TON time duration.
   Conversion ratio: 200 ns/dec.

Table 42. BUCK DIAGNOSTICS REGISTER 0x15

BUCK Diagnostics Register 0x15											
Address		Bit 9	Bit 8	Bit 7	Bit 6	Bit 5	Bit 4	Bit 3	Bit 2	Bit 1	Bit 0
0x15	Name	0	ODD PARITY	0	0	OPEN LED1	SHORT LED1	OC LED1	OPEN LED2	SHORT LED2	OC LED2
	Reset	0	1	0	0	0	0	0	0	0	0
	Access	R	R	R	R	R	R	R	R	R	R

1. ODD PARITY – Odd Parity Bit over Diagnostic bits.
2. OPENLED1 – Buck 1 Open LED string Flag, Latched
   1: Too long TON time has been detected, TON > TON_OPEN (50 μs typ.)
   Flag is cleared by read
3. SHORTLED1 – Buck 1 Short LED string Flag, Latched
   1: Low string voltage has been detected, VLED1 < VLED_LMT (1.8 V typ.). Flag is cleared by read
4. OCLED1 – Buck 1 Over−Current LED string Flag, Latched
   1: Too high current has been detected during 2 + BUCK_OC_OCCMP_THR[1:0] consecutive periods
   Over−current detection level, Range 1 = 305 mA (min value)
   Over−current detection level, Range 2 = 609 mA (min value)
   Over−current detection level, Range 3 = 1219 mA (min value)
   Over−current detection level, Range 4 = 2437 mA (min value)
   Over−current detection level, Range 5 = 4875 mA (min value)
   Flag is cleared by read
5. OPENLED2 – Buck 2 Open LED string Flag, Latched
   1: Too long TON time has been detected, TON > TON_OPEN (50 μs typ.)
   Flag is cleared by read
6. SHORTLED2 – Buck 2 Short LED string Flag, Latched
   1: Low string voltage has been detected, VLED2 < VLED_LMT (1.8 V typ.)
   Flag is cleared by read
7. OCLED2 – Buck 2 Over−Current LED string Flag, Latched
   1: Too high current has been detected during 2 + BUCK_OC_OCCMP_THR[1:0] consecutive periods
   Over−current detection level, Range 1 = 305 mA (min value)
   Over−current detection level, Range 2 = 609 mA (min value)
   Over−current detection level, Range 3 = 1219 mA (min value)
   Over−current detection level, Range 4 = 2437 mA (min value)
   Over−current detection level, Range 5 = 4875 mA (min value)
   Flag is cleared by read

Table 43. BUCK DIAGNOSTICS REGISTER 0x16

BUCK Diagnostics Register 0x16											
Address		Bit 9	Bit 8	Bit 7	Bit 6	Bit 5	Bit 4	Bit 3	Bit 2	Bit 1	Bit 0
0x16	Name	0	ODD PARITY	OTP _FAIL	FSO	HWR	LED1 VAL	LED2 VAL	SPIERR	TSD	TW
	Reset	0	X	0	0	1	X	X	X	X	X
	Access	R	R	R	R	R	R	R	R	R	R

1. ODD PARITY – Odd Parity Bit over Diagnostic bits.
2. OTP_FAIL – OTP Failure Flag, Latched
   1: Under−voltage on VBOOST pin (< 15 V) during OTP zapping has been detected
   Flag is cleared by read
3. FSO – Fail Safe Operating (FSO) mode Flag, Non−latched
   1: FSO mode is active
4. HWR – Hardware Reset Flag, Latched
   1: Set after POR
   Flag is cleared by read
5. LED1VAL – Actual Status of LEDCTRL1 pin – digitally de−bounced by 200 ns
   0: LEDCTRL1 pin is low
   1: LEDCTRL1 pin is high
6. LED2VAL – Actual Status of LEDCTRL2 pin – digitally de−bounced by 200 ns
   0: LEDCTRL2 pin is low
   1: LEDCTRL2 pin is high
7. SPIERR – SPI Communication Framing and Parity Error Flag, Latched
   1: At least one of following situations has been detected
   – Not an integer multiple of 16 CLK pulses during active−low CSB signal
   – LSB bits [8:0] of SPI Read command are not all zero
   – SPI Parity Error during Write or Read operation
   Flag is cleared by read
8. TSD – Thermal Shutdown Flag, Latched
   1: Junction temperature has reached Thermal Shutdown level
   (VTEMP[7:0]≥ 189)
   Flag is cleared by read
9. TW – Thermal Warning Flag, Latched
   1: Junction temperature has reached Thermal Warning level (VTEMP[7:0] ≥ THERMAL_WARNING_THR[7:0])
   Flag is cleared by read

Table 44. BUCK DIAGNOSTICS REGISTER 0x17

BUCK Diagnostics Register 0x17											
Address		Bit 9	Bit 8	Bit 7	Bit 6	Bit 5	Bit 4	Bit 3	Bit 2	Bit 1	Bit 0
0x17	Name	0	ODD PARITY	0	0	0	OTP_ACTIVE	BUCK1_MIN_TON	BUCK2_MIN_TON	BUCK1_STATUS	BUCK2_STATUS
	Reset	0	1	0	0	0	0	0	0	0	0
	Access	R	R	R	R	R	R	R	R	R	R

1. ODD PARITY – Odd Parity Bit over Diagnostic bits.
2. OTP_ACTIVE – OTP Active Flag, Non–latched
   1: OTP operation is in progress
3. BUCK1_MIN_TON – Minimal TON time Flag, Latched
   1: Min TON time has been detected on Buck1, TON < TON_MIN (max 250 ns)
   Flag is cleared by read
4. BUCK2_MIN_TON – Minimal TON time Flag, Latched
   1: Min TON time has been detected on Buck2, TON < TON_MIN (max 250 ns)
   Flag is cleared by read
5. BUCK1_STATUS – Actual Status of Buck 1
   0: Buck 1 is disabled
   1: Buck 1 is enabled
6. BUCK2_STATUS – Actual Status of Buck 2
   0: Buck 2 is disabled
   1: Buck 2 is enabled

Table 45. BUCK TRIMMING REGISTER 0x18

BUCK Trimming Register 0x18											
Address		Bit 9	Bit 8	Bit 7	Bit 6	Bit 5	Bit 4	Bit 3	Bit 2	Bit 1	Bit 0
0x18	Name	0	ODD PARITY	0	BUCKx_ISENS_RNG[6:0]						
	Reset	0	X	0	X	X	X	X	X	X	X
	Access	R	R	R	R	R	R	R	R	R	R

1. ODD PARITY – Odd Parity Bit over Trimming bits.
2. BUCKx_ISENS_RNG[6:0] – Peak current trimming constant for Range 5 at hot temperature
   – Belongs to Buck 1 if bit x_BANK_SEL = 0
   – Belongs to Buck 2 if bit x_BANK_SEL = 1

Table 46. BUCK TRIMMING REGISTER 0x19

BUCK Trimming Register 0x19											
Address		Bit 9	Bit 8	Bit 7	Bit 6	Bit 5	Bit 4	Bit 3	Bit 2	Bit 1	Bit 0
0x19	Name	0	ODD PARITY	BUCKx_ISENS_D2[3:0]				BUCKx_ISENS_D1[3:0]			
	Reset	0	X	X	X	X	X	X	X	X	X
	Access	R	R	R	R	R	R	R	R	R	R

1. ODD PARITY – Odd Parity Bit over Trimming bits.
2. BUCKx_ISENS_D2[3:0] – Peak current delta of trimming constant with respect to Range 5 at hot temperature
   – Belongs to Buck 1 if bit x_BANK_SEL = 0
   – Belongs to Buck 2 if bit x_BANK_SEL = 1
   This constant is signed and stored as Two's complement.
   0000: 0 0100: 4 1000: –8 1100: –4
   0001: 1 0101: 5 1001: –7 1101: –3
   0010: 2 0110: 6 1010: –6 1110: –2
   0011: 3 0111: 7 1011: –5 1111: –1
3. BUCKx_ISENS_D1[3:0] – Peak current delta of trimming constant with respect to Range 5 at hot temperature
   – Belongs to Buck 1 if bit x_BANK_SEL = 0
   – Belongs to Buck 2 if bit x_BANK_SEL = 1
   This constant is signed and stored as Two's complement.
   0000: 0 0100: 4 1000: –8 1100: –4
   0001: 1 0101: 5 1001: –7 1101: –3
   0010: 2 0110: 6 1010: –6 1110: –2
   0011: 3 0111: 7 1011: –5 1111: –1

Table 47. BUCK TRIMMING REGISTER 0x1A

BUCK Trimming Register 0x1A											
Address		Bit 9	Bit 8	Bit 7	Bit 6	Bit 5	Bit 4	Bit 3	Bit 2	Bit 1	Bit 0
0x1A	Name	0	ODD PARITY	BUCKx_ISENS_D4[3:0]				BUCKx_ISENS_D3[3:0]			
	Reset	0	X	X	X	X	X	X	X	X	X
	Access	R	R	R	R	R	R	R	R	R	R

1. ODD PARITY – Odd Parity Bit over Trimming bits.
2. BUCKx_ISENS_D4[3:0] – Peak current delta of trimming constant with respect to Range 5 at hot temperature
   – Belongs to Buck 1 if bit x_BANK_SEL = 0
   – Belongs to Buck 2 if bit x_BANK_SEL = 1
   This constant is signed and stored as Two's complement.
   0000: 0 0100: 4 1000: –8 1100: –4
   0001: 1 0101: 5 1001: –7 1101: –3
   0010: 2 0110: 6 1010: –6 1110: –2
   0011: 3 0111: 7 1011: –5 1111: –1
3. BUCKx_ISENS_D3[3:0] – Peak current delta of trimming constant with respect to Range 5 at hot temperature
   – Belongs to Buck 1 if bit x_BANK_SEL = 0
   – Belongs to Buck 2 if bit x_BANK_SEL = 1
   This constant is signed and stored as Two's complement.
   0000: 0 0100: 4 1000: –8 1100: –4
   0001: 1 0101: 5 1001: –7 1101: –3
   0010: 2 0110: 6 1010: –6 1110: –2
   0011: 3 0111: 7 1011: –5 1111: –1

Table 48. BUCK TRIMMING REGISTER 0x1B

BUCK Trimming Register 0x1B											
Address		Bit 9	Bit 8	Bit 7	Bit 6	Bit 5	Bit 4	Bit 3	Bit 2	Bit 1	Bit 0
0x1B	Name	0	ODD PARITY	BUCK_ISENS_TC1[3:0]				BUCK_ISENS_TC0[3:0]			
	Reset	0	X	X	X	X	X	X	X	X	X
	Access	R	R	R	R	R	R	R	R	R	R

1. ODD PARITY – Odd Parity Bit over Trimming bits.
2. BUCK_ISENS_TC1[3:0] – Peak current temperature coefficient for Buck 1 and Ranges 3, 4, 5.
   This coefficient is signed and stored as Two's complement.
   0000: 0 0100: 4 1000: –8 1100: –4
   0001: 1 0101: 5 1001: –7 1101: –3
   0010: 2 0110: 6 1010: –6 1110: –2
   0011: 3 0111: 7 1011: –5 1111: –1
3. BUCK_ISENS_TC0[3:0] – Peak current temperature coefficient for Buck 1 and Ranges 1, 2.
   This coefficient is signed and stored as Two's complement.
   0000: 0 0100: 4 1000: –8 1100: –4
   0001: 1 0101: 5 1001: –7 1101: –3
   0010: 2 0110: 6 1010: –6 1110: –2
   0011: 3 0111: 7 1011: –5 1111: –1

Table 49. BUCK TRIMMING REGISTER 0x1C

BUCK Trimming Register 0x1C											
Address		Bit 9	Bit 8	Bit 7	Bit 6	Bit 5	Bit 4	Bit 3	Bit 2	Bit 1	Bit 0
0x1C	Name	0	ODD PARITY	BUCK_ISENS_TC3[3:0]				BUCK_ISENS_TC2[3:0]			
	Reset	0	X	X	X	X	X	X	X	X	X
	Access	R	R	R	R	R	R	R	R	R	R

1. ODD PARITY – Odd Parity Bit over Trimming bits.
2. BUCK_ISENS_TC3[3:0] – Peak current temperature coefficient for Buck 2 and Ranges 3, 4, 5.
   This coefficient is signed and stored as Two's complement.
   0000: 0 0100: 4 1000: –8 1100: –4
   0001: 1 0101: 5 1001: –7 1101: –3
   0010: 2 0110: 6 1010: –6 1110: –2
   0011: 3 0111: 7 1011: –5 1111: –1
3. BUCK_ISENS_TC2[3:0] – Peak current temperature coefficient for Buck 2 and Ranges 1, 2.
   This coefficient is signed and stored as Two's complement.
   0000: 0 0100: 4 1000: –8 1100: –4
   0001: 1 0101: 5 1001: –7 1101: –3
   0010: 2 0110: 6 1010: –6 1110: –2
   0011: 3 0111: 7 1011: –5 1111: –1

Table 50. BUCK TRIMMING REGISTER 0x1D

BUCK Trimming Register 0x1D											
Address		Bit 9	Bit 8	Bit 7	Bit 6	Bit 5	Bit 4	Bit 3	Bit 2	Bit 1	Bit 0
0x1D	Name	0	ODD PARITY	0	0	0	0	BUCK_ISENS_TC4[3:0]			
	Reset	0	0	0	0	0	0	0	0	0	0
	Access	R	R	R	R	R	R	R	R	R	R

1. ODD PARITY – Odd Parity Bit over Trimming bits.
2. BUCK_ISENS_TC4[3:0] – Unused.

Table 51. OTP DATA REGISTER 0x1E

OTP Data Register 0x1E											
Address		Bit 9	Bit 8	Bit 7	Bit 6	Bit 5	Bit 4	Bit 3	Bit 2	Bit 1	Bit 0
0x1E	Name	OTP_DATA[9:0]									
	Reset	0	0	0	0	0	0	0	0	0	0
	Access	R	R	R	R	R	R	R	R	R	R

1. OTP_DATA[9:0] – OTP Data accessible after finished OTP Refresh operation (OTP_OPERATION[1:0] = 1) as follows:
   OTP_ADDR[1:0] = 0: OTP_DATA[9:0] = OTP[9:0]
   OTP_ADDR[1:0] = 1: OTP_DATA[9:0] = OTP[19:10]
   OTP_ADDR[1:0] = 2: OTP_DATA[9:0] = OTP[29:20]
   OTP_ADDR[1:0] = 3: OTP_DATA[9:0] = OTP[39:30]

Table 52. OTP DATA REGISTER 0x1F

Revision ID Register 0x1F											
Address		Bit 9	Bit 8	Bit 7	Bit 6	Bit 5	Bit 4	Bit 3	Bit 2	Bit 1	Bit 0
0x1F	Name	0	REVID[8:0]								
	Reset	0	1	0	0	0	X	X	0	X	X
	Access	R	R	R	R	R	R	R	R	R	R

1. REVID[8:0] – Revision ID – identification of device.
   REVID[4:3]: Full Mask Version
   REVID[1:0]: Metal Tune

   0x108:The first silicon (P78825900) (Full Mask = 1, Metal Tune = 0)
   0x109:The second silicon (NV78825−0) (Full Mask = 1, Metal Tune = 1)
   0x10A:The third silicon (NV78825−0) (Full Mask = 1, Metal Tune = 2)

POR values (Reset field) of status registers are shown in situation that FSO mode is not entered after POR. ‘X’ means that value after reset is defined during reset phase (diagnostics) or is trimmed during manufacturing process.

OTP MEMORY

Description

The OTP (Once Time Programmable) memory contains 40 bits which bear the most important application dependent parameters and is user programmable via SPI interface. The programming of these bits is typically done at the end of the module manufacturing line.

OTP memory serves to store configuration data for Fail−Safe or Stand−Alone functionality or default configuration of the chip after power−up.

The OTP bits can be programmed only once, this is ensured by dedicated *OTP Lock Bit* which is set during programming.

Table 53. OTP MAP

OTP Bits	Connection to SPI Register
OTP[7:0]	BUCK1_VTHR[8:1]
OTP[9:8]	BUCK1_ISENS_THR[1:0]
OTP[17:10]	BUCK2_VTHR[8:1]
OTP[19:18]	BUCK2_ISENS_THR[1:0]
OTP[24:20]	BUCK1_TOFF[4:0]
OTP[29:25]	BUCK2_TOFF[4:0]
OTP[30]	BUCK1_EN
OTP[31]	BUCK2_EN
OTP[34:32]	FSO_MD[2:0]
OTP[35]	BUCK1_TSD_AUT_RCR_EN
OTP[36]	BUCK2_TSD_AUT_RCR_EN
OTP[38:37]	BUCK_OC_OCCMP_THR[1:0]
OTP[39]	OTP Lock Bit

The OTP bits addressed by SPI register OTP_ADDR[1:0] are accessible (read only) in the SPI register OTP_DATA[9:0] after OTP Refresh operation (OTP_OPERATION[1:0] = 0x1) in the following way:

OTP_ADDR[1:0] = 0x0: OTP_DATA[9:0] = OTP[9:0]
OTP_ADDR[1:0] = 0x1: OTP_DATA[9:0] = OTP[19:10]
OTP_ADDR[1:0] = 0x2: OTP_DATA[9:0] = OTP[29:20]
OTP_ADDR[1:0] = 0x3: OTP_DATA[9:0] = OTP[39:30]

OTP Operations

The NCV78825 supports following operations with OTP memory:

- OTP_OPERATION[1:0] = 0x0 or 0x3:
  NOP (no operation)
- OTP_OPERATION[1:0] = 0x1:
  OTP Refresh – refresh of the whole OTP memory (40 bits). Data addressed by SPI register OTP_ADDR[1:0] are available in SPI register OTP_DATA[9:0] after the end of OTP Refresh operation.
- OTP_OPERATION[1:0] = 0x2:
  OTP Zap – data from SPI register (those listed in Table 53) and *OTP Lock Bit* are programmed into OTP memory. OTP Zap operation is allowed to be performed only once − when *OTP Lock Bit* is unprogrammed.

SPI status bit OTP_ACTIVE is set to “log. 1” when an OTP operation is in progress.

OTP Programming Procedure

Following procedure should be applied to program OTP memory:

- VBOOST voltage has to be in range between 15 V and 20 V with current capability at least 50 mA
- VDRIVE voltage has to be kept in range for normal mode operation
- The junction temperature has to stay in range from 0 °C to 125 °C during OTP programming.
- SPI registers listed in Table 53 have to be written with required content
- Content of the SPI registers (those listed in Table 53) is programmed into the OTP memory by OTP_OPERATION[1:0] = 0x2 SPI write command. *OTP Lock Bit* is programmed automatically at the same time to prevent any further OTP programming

OTP Programming Verification

OTP_FAIL bit in the SPI status register is set when VBOOST under−voltage (see OTP_UV parameter) is detected during OTP Zap operation. It is clear by read flag.

The OTP_BIAS_H and OTP_BIAS_L registers are used to check proper OTP programming. After OTP programming, the OTP content has to be the same as programmed when OTP is read with OTP_BIAS_H = 1 and OTP_BIAS_L = 1.

Following procedure should be applied to verify OTP content:

- VDD voltage has to be kept in range for normal mode operation
- Write SPI registers OTP_BIAS_L = 1 and OTP_BIAS_H = 0
- Write SPI register OTP_OPERATION[1:0] = 0x1 (OTP Refresh) for all OTP_ADDR[1:0] values and check corresponding OTP_DATA[9:0] content which has to match with previously programmed data
- Write SPI registers OTP_BIAS_L = 0 and OTP_BIAS_H = 1
- Write SPI register OTP_OPERATION[1:0] = 0x1 (OTP Refresh) for all OTP_ADDR[1:0] values and check corresponding OTP_DATA[9:0] content which has to match with previously programmed data
- Programming is considered as successful when no mismatch is observed

PCB LAYOUT RECOMMENDATIONS

This section contains instructions for the NCV78825 PCB layout application design. Although this guide does not claim to be exhaustive, these directions can help the developer to reduce application noise impact and insuring the best system operation

- External components for each BUCK channel have to be placed as close as possible to NCV78825 device in order to minimize switching loop – preferably all components on same layer as NCV78825 device
- Power tracks have to be as short as possible with low impedance. Special attention has to be paid for proper routing of VINBCKx pins and VBOOST pin in order to ensure same potential between these pins and right functionality of M3V voltage regulator, especially at high currents.
- Switching loop created by Input Capacitor, internal High Side Switch and external Low Side Switch has to be minimized
- VDD and VDRIVE decoupling capacitors should be as close as possible to NCV78825 device
- Shielding ground layer below external components of Buck regulator can be created
- Exposed pad connection has to ensure perfect cooling of the NCV78825 device
- Usage of double LS FET in one package for both channels is not recommended because of increasing switching loop area

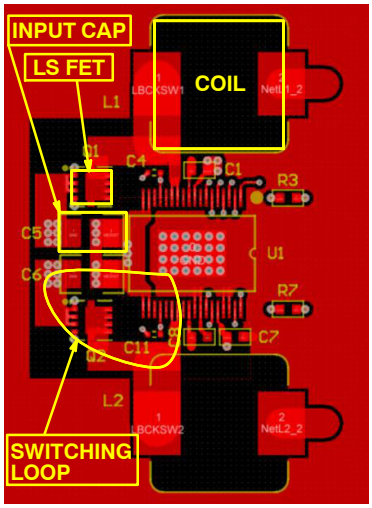

Figure 25. NCV78825 PCB Layout – Switching Loop

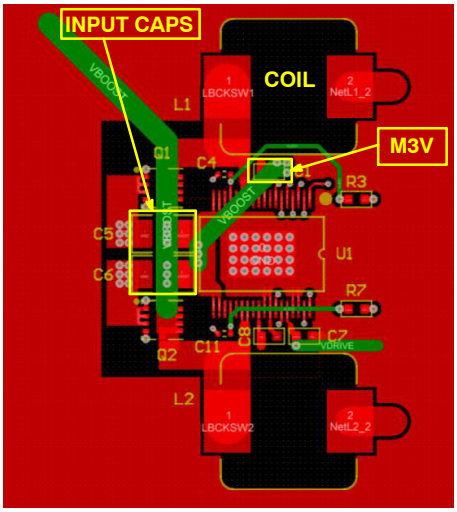

Figure 26. NCV78825 PCB Layout – VBOOST Connection

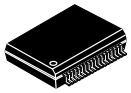

SCALE 1:1

SSOP36 EP
CASE 940AB
ISSUE A

DATE 19 JAN 2016

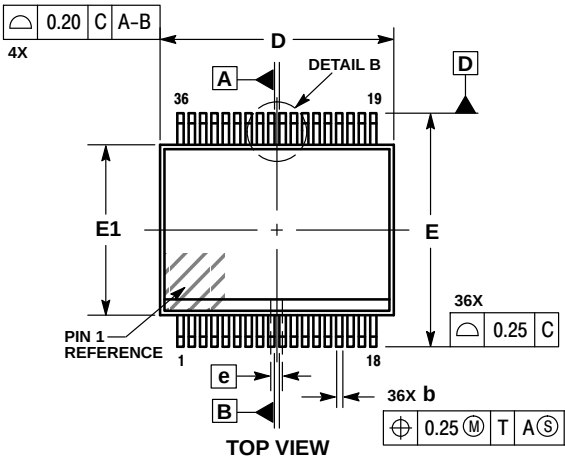

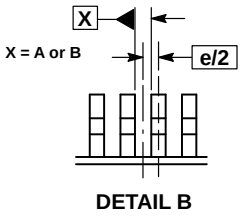

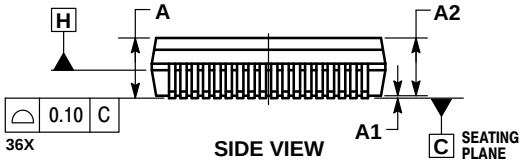

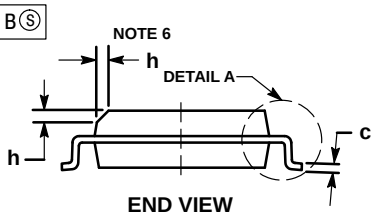

NOTES:
1. DIMENSIONING AND TOLERANCING PER ASME Y14.5M, 1994.
2. CONTROLLING DIMENSION: MILLIMETERS.
3. DIMENSION b DOES NOT INCLUDE DAMBAR PROTRUSION. ALLOWABLE DAMBAR PROTRUSION SHALL BE 0.13 TOTAL IN EXCESS OF THE b DIMENSION AT MMC.
4. DIMENSION b SHALL BE MEASURED BETWEEN 0.10 AND 0.25 FROM THE TIP.
5. DIMENSIONS D AND E1 DO NOT INCLUDE MOLD FLASH, PROTRUSIONS OR GATE BURRS. DIMENSIONS D AND E1 SHALL BE DETERMINED AT DATUM H.
6. THIS CHAMFER FEATURE IS OPTIONAL. IF IT IS NOT PRESENT, A PIN ONE IDENTIFIER MUST BE LOACATED WITHIN THE INDICATED AREA.

	MILLIMETERS	
DIM	MIN	MAX
A	---	2.65
A1	---	0.10
A2	2.15	2.60
b	0.18	0.30
c	0.23	0.32
D	10.30 BSC	
D2	5.70	5.90
E	10.30 BSC	
E1	7.50 BSC	
E2	3.90	4.10
e	0.50 BSC	
h	0.25	0.75
L	0.50	0.90
L2	0.25 BSC	
M	0°	8°
M1	5°	15°

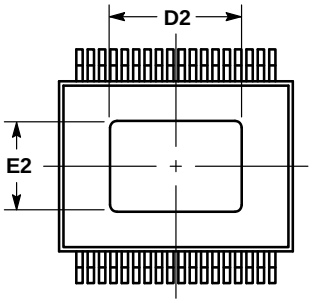

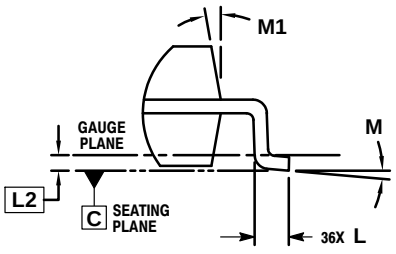

SOLDERING FOOTPRINT

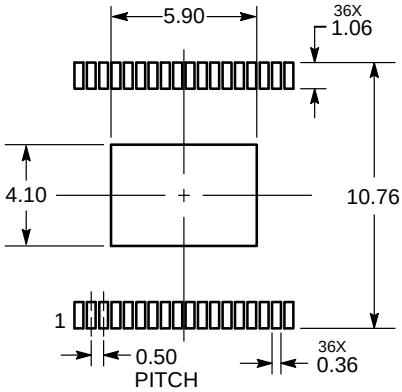

DIMENSIONS: MILLIMETERS

GENERIC MARKING DIAGRAM*

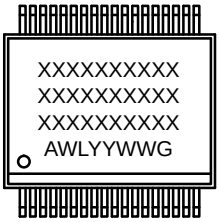

XXXX = Specific Device Code
A = Assembly Location
WL = Wafer Lot
YY = Year
WW = Work Week
G = Pb−Free Package

*This information is generic. Please refer to device data sheet for actual part marking.

DOCUMENT NUMBER:	**98AON46215E**	Electronic versions are uncontrolled except when accessed directly from the Document Repository. Printed versions are uncontrolled except when stamped "CONTROLLED COPY" in red.
DESCRIPTION:	**SSOP36 EXPOSED PAD**	**PAGE 1 OF 1**

onsemi and onsemi are trademarks of Semiconductor Components Industries, LLC dba **onsemi** or its subsidiaries in the United States and/or other countries. **onsemi** reserves the right to make changes without further notice to any products herein. **onsemi** makes no warranty, representation or guarantee regarding the suitability of its products for any particular purpose, nor does **onsemi** assume any liability arising out of the application or use of any product or circuit, and specifically disclaims any and all liability, including without limitation special, consequential or incidental damages. **onsemi** does not convey any license under its patent rights nor the rights of others.

onsemi, , and other names, marks, and brands are registered and/or common law trademarks of Semiconductor Components Industries, LLC dba "**onsemi**" or its affiliates and/or subsidiaries in the United States and/or other countries. **onsemi** owns the rights to a number of patents, trademarks, copyrights, trade secrets, and other intellectual property. A listing of **onsemi**'s product/patent coverage may be accessed at www.onsemi.com/site/pdf/Patent−Marking.pdf. **onsemi** reserves the right to make changes at any time to any products or information herein, without notice. The information herein is provided "as−is" and **onsemi** makes no warranty, representation or guarantee regarding the accuracy of the information, product features, availability, functionality, or suitability of its products for any particular purpose, nor does **onsemi** assume any liability arising out of the application or use of any product or circuit, and specifically disclaims any and all liability, including without limitation special, consequential or incidental damages. Buyer is responsible for its products and applications using **onsemi** products, including compliance with all laws, regulations and safety requirements or standards, regardless of any support or applications information provided by **onsemi**. "Typical" parameters which may be provided in **onsemi** data sheets and/or specifications can and do vary in different applications and actual performance may vary over time. All operating parameters, including "Typicals" must be validated for each customer application by customer's technical experts. **onsemi** does not convey any license under any of its intellectual property rights nor the rights of others. **onsemi** products are not designed, intended, or authorized for use as a critical component in life support systems or any FDA Class 3 medical devices or medical devices with a same or similar classification in a foreign jurisdiction or any devices intended for implantation in the human body. Should Buyer purchase or use **onsemi** products for any such unintended or unauthorized application, Buyer shall indemnify and hold **onsemi** and its officers, employees, subsidiaries, affiliates, and distributors harmless against all claims, costs, damages, and expenses, and reasonable attorney fees arising out of, directly or indirectly, any claim of personal injury or death associated with such unintended or unauthorized use, even if such claim alleges that **onsemi** was negligent regarding the design or manufacture of the part. **onsemi** is an Equal Opportunity/Affirmative Action Employer. This literature is subject to all applicable copyright laws and is not for resale in any manner.

ADDITIONAL INFORMATION

TECHNICAL PUBLICATIONS:
Technical Library: www.onsemi.com/design/resources/technical−documentation
onsemi Website: www.onsemi.com

ONLINE SUPPORT: www.onsemi.com/support
For additional information, please contact your local Sales Representative at www.onsemi.com/support/sales