FKC 2,5/16-ST-5,08-LR - PCB connector

1810939

https://www.phoenixcontact.com/us/products/1810939

Please be informed that the data shown in this PDF document is generated from our online catalog. Please find the complete data in the user documentation. Our general terms of use for downloads are valid.

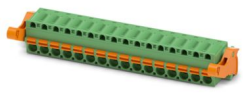

PCB connector, nominal cross section: 2.5 mm^2, color: green, nominal current: 12 A, rated voltage (III/2): 320 V, contact surface: Tin, contact connection type: Socket, number of potentials: 16, number of rows: 1, number of positions: 16, number of connections: 16, product range: FKC 2,5/..-ST-LR, pitch: 5.08 mm, connection method: Push-in spring connection, conductor/PCB connection direction: 0 °, locking clip: - Locking clip, plug-in system: COMBICON MSTB 2,5, locking: Snap-in locking, mounting: Lock & Release ejector lever, type of packaging: packed in cardboard

Your advantages

- Time saving push-in connection, tools not required
- Intuitive operation due to color-coded actuating push button
- Quick and convenient testing using integrated test option
- Automatic locking and intuitive release through Lock and Release operating lever in contrasting color
- Can be combined with the MSTB 2,5 range

Commercial data

Item number	1810939
Packing unit	50 pc
Minimum order quantity	50 pc
Sales key	AA03
Product key	AACFBK
Catalog page	Page 275 (C-1-2013)
GTIN	4046356708128
Weight per piece (including packing)	30.152 g
Weight per piece (excluding packing)	29.99 g
Customs tariff number	85366990
Country of origin	DE

Technical data

Product properties

Product type	PCB connector
Product family	FKC 2,5/..-ST-LR
Product line	COMBICON Connectors M
Type	Standard
Number of positions	16
Pitch	5.08 mm
Number of connections	16
Number of rows	1
Number of potentials	16
Mounting flange	Lock & Release ejector lever

Electrical properties

Nominal current I_N	12 A
Nominal voltage U_N	320 V
Rated voltage (III/3)	320 V
Rated surge voltage (III/3)	4 kV
Rated voltage (III/2)	320 V
Rated surge voltage (III/2)	4 kV
Rated voltage (II/2)	630 V
Rated surge voltage (II/2)	4 kV

Connection data

Connection technology

Connector system	COMBICON MSTB 2,5
Nominal cross section	2.5 mm²
Contact connection type	Socket

Interlock

Locking type	Snap-in locking
Mounting flange	Lock & Release ejector lever

Conductor connection

Connection method	Push-in spring connection
Connection direction of the conductor to plug-in direction	0 °
Conductor/PCB connection direction	0 °
Conductor cross section rigid	0.2 mm² ... 2.5 mm²
Conductor cross section flexible	0.2 mm² ... 2.5 mm²
Conductor cross section AWG	24 ... 12
Conductor cross section flexible, with ferrule without plastic sleeve	0.25 mm² ... 2.5 mm²
Conductor cross section, flexible, with ferrule, with plastic sleeve	0.25 mm² ... 2.5 mm²

2 conductors with the same cross section, flexible, with TWIN ferrule with plastic sleeve	0.5 mm² ... 1.5 mm²
Stripping length	10 mm

Specifications for ferrules without insulating collar

recommended crimping tool	1212034 CRIMPFOX 6
ferrules without insulating collar, according to DIN 46228-1	Cross section: 0.5 mm²; Length: 8 mm ... 10 mm
	Cross section: 0.75 mm²; Length: 8 mm ... 10 mm
	Cross section: 1 mm²; Length: 8 mm ... 10 mm
	Cross section: 1.5 mm²; Length: 8 mm ... 10 mm
	Cross section: 2.5 mm²; Length: 10 mm

Specifications for ferrules with insulating collar

recommended crimping tool	1212034 CRIMPFOX 6
ferrules with insulating collar, according to DIN 46228-4	Cross section: 0.5 mm²; Length: 8 mm ... 10 mm
	Cross section: 0.75 mm²; Length: 8 mm ... 10 mm
	Cross section: 1 mm²; Length: 8 mm ... 10 mm
	Cross section: 1.5 mm²; Length: 8 mm ... 10 mm
	Cross section: 2.5 mm²; Length: 10 mm

Material specifications

Material data - contact

Note	WEEE/RoHS-compliant, free of whiskers according to IEC 60068-2-82/JEDEC JESD 201
Contact material	Cu alloy
Surface characteristics	hot-dip tin-plated
Metal surface terminal point (top layer)	Tin (4 - 8 µm Sn)
Metal surface contact area (top layer)	Tin (4 - 8 µm Sn)

Material data - housing

Color (Housing)	green (6021)
Insulating material	PA
Insulating material group	I
CTI according to IEC 60112	600
Flammability rating according to UL 94	V0
Glow wire flammability index GWFI according to EN 60695-2-12	850
Glow wire ignition temperature GWIT according to EN 60695-2-13	775
Temperature for the ball pressure test according to EN 60695-10-2	125 °C

Material data – actuating element

Color (Actuating element)	orange (2003)
Insulating material	PBT
Insulating material group	I
CTI according to IEC 60112	600

Flammability rating according to UL 94	V0

Dimensions

Dimensional drawing	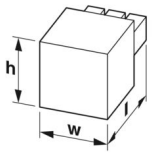
Pitch	5.08 mm
Width [w]	90.8 mm
Height [h]	15 mm
Length [l]	33.52 mm

Notes

Notes on operation	In accordance with IEC 61984, COMBICON connectors have no switching power (COC). During designated use, they must not be plugged in or disconnected when carrying voltage or under load.

Environmental and real-life conditions

Ambient conditions

Ambient temperature (operation)	-40 °C ... 100 °C (dependent on the derating curve)
Ambient temperature (storage/transport)	-40 °C ... 70 °C
Relative humidity (storage/transport)	30 % ... 70 %
Ambient temperature (assembly)	-5 °C ... 100 °C

Electrical tests

Air clearances and creepage distances |

Specification	IEC 60664-1:2007-04
Insulating material group	I
Comparative tracking index (IEC 60112)	CTI 600
Rated insulation voltage (III/3)	320 V
Rated surge voltage (III/3)	4 kV
minimum clearance value - non-homogenous field (III/3)	3 mm
minimum creepage distance (III/3)	4 mm
Rated insulation voltage (III/2)	320 V
Rated surge voltage (III/2)	4 kV
minimum clearance value - non-homogenous field (III/2)	3 mm
minimum creepage distance (III/2)	3 mm
Rated insulation voltage (II/2)	630 V
Rated surge voltage (II/2)	4 kV
minimum clearance value - non-homogenous field (II/2)	3 mm
minimum creepage distance (II/2)	3.2 mm

Packaging specifications

Type of packaging	packed in cardboard

Drawings

Dimensional drawing

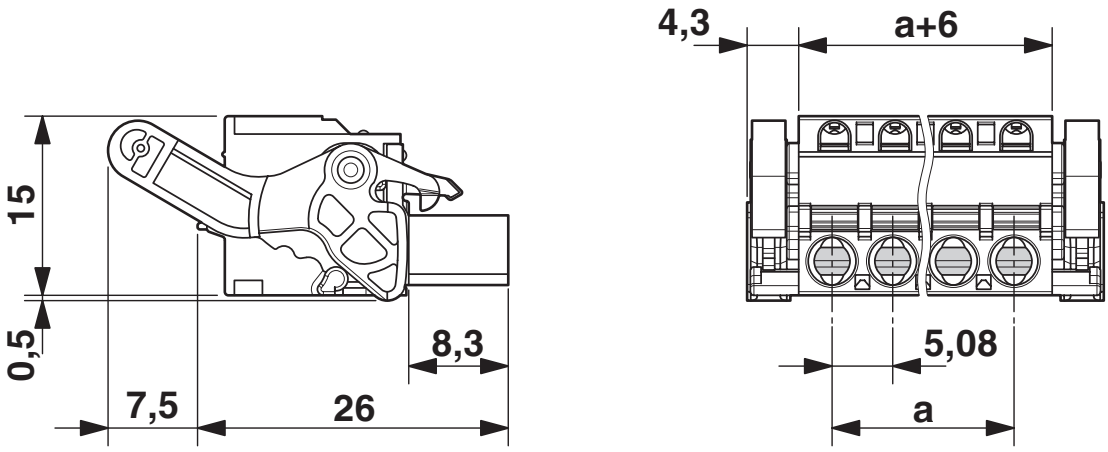

Approvals

To download certificates, visit the product detail page: https://www.phoenixcontact.com/us/products/1810939

cULus Recognized
Approval ID: E60425-19931011

	Nominal voltage U_N	Nominal current I_N	Cross section AWG	Cross section mm^2
Use group B				
	300 V	10 A	26 - 12	-
Use group D				
	300 V	10 A	26 - 12	-

VDE Zeichengenehmigung
Approval ID: 40050694

	Nominal voltage U_N	Nominal current I_N	Cross section AWG	Cross section mm^2
	250 V	12 A	-	0.2 - 2.5

Classifications

ECLASS

ECLASS-11.0	27460202
ECLASS-12.0	27460202
ECLASS-13.0	27460202

ETIM

ETIM 9.0	EC002638

UNSPSC

UNSPSC 21.0	39121400

Environmental product compliance

EU RoHS

Fulfills EU RoHS substance requirements	Yes, No exemptions

China RoHS

Environment friendly use period (EFUP)	EFUP-E
	No hazardous substances above the limits

EU REACH SVHC

REACH candidate substance (CAS No.)	No substance above 0.1 wt%

Accessories

CP-MSTB - Coding profile

1734634

https://www.phoenixcontact.com/us/products/1734634

Coding profile, is inserted into the slot on the plug or inverted header, red insulating material



STZ 8-FKC-5,08 - Strain relief

1876880

https://www.phoenixcontact.com/us/products/1876880

Strain relief for snapping into the latching chambers of the plug components, 8-pos.



MPS-MT - Test plug

0201744

https://www.phoenixcontact.com/us/products/0201744



Test plug, with solder connection up to 1 mm^2 conductor cross section, number of positions: 1, color: gray

RPS - Reducing plug

0201647

https://www.phoenixcontact.com/us/products/0201647



Reducing plug, number of positions: 1, color: gray

SZS 0,6X3,5 - Screwdriver

1205053

https://www.phoenixcontact.com/us/products/1205053



Actuation tool, for ST terminal blocks, insulated, also suitable for use as a bladed screwdriver, size: 0.6 x 3.5 x 100 mm, 2-component grip, with non-slip grip

CC 2,5/16-GF-5,08-LR P26THR - PCB header

1827553

https://www.phoenixcontact.com/us/products/1827553



PCB headers, nominal cross section: 2.5 mm^2, color: black, nominal current: 12 A, rated voltage (III/2): 320 V, contact surface: Tin, contact connection type: Pin, number of potentials: 16, number of rows: 1, number of positions: 16, number of connections: 16, product range: CC 2,5/..-GF-LR, pitch: 5.08 mm, mounting: THR soldering, pin layout: Linear pinning, solder pin [P]: 2.6 mm, number of solder pins per potential: 1, plug-in system: COMBICON MSTB 2,5, Pin connector pattern alignment: Standard, locking: Snap-in locking, mounting: Lock & release threaded flange, type of packaging: packed in cardboard

FKC 2,5/16-ST-5,08-LR - PCB connector

1810939

https://www.phoenixcontact.com/us/products/1810939

CCV 2,5/16-GF-5,08-LR P26THR - PCB header

1827799

https://www.phoenixcontact.com/us/products/1827799



PCB headers, nominal cross section: 2.5 mm^2, color: black, nominal current: 12 A, rated voltage (III/2): 320 V, contact surface: Tin, contact connection type: Pin, number of potentials: 16, number of rows: 1, number of positions: 16, number of connections: 16, product range: CCV 2,5/..-GF-LR, pitch: 5.08 mm, mounting: THR soldering, pin layout: Linear pinning, solder pin [P]: 2.6 mm, number of solder pins per potential: 1, plug-in system: COMBICON MSTB 2,5, Pin connector pattern alignment: Standard, locking: Snap-in locking, mounting: Lock & release threaded flange, type of packaging: packed in cardboard

Phoenix Contact 2024 © - all rights reserved
https://www.phoenixcontact.com

Phoenix Contact USA
586 Fulling Mill Road
Middletown, PA 17057, United States
(+717) 944-1300
info@phoenixcon.com