# Insulated Gen 2 Schottky Rectifier Module, 250 A

SOT-227

| PRIMARY CHARACTERISTICS | |
|---|---|
| $I_{F(AV)}$ per module at $T_C$ = 106 °C | 250 A |
| $V_R$ | 200 V |
| $V_{FM}$ at 200 A, $T_C$ = 25 °C | 1.0 V |
| Package | SOT-227 |
| Circuit configuration | Two separate diodes, parallel pin-out |

## FEATURES

- Max. $T_J$ = 175 °C
- Two fully independent diodes
- Fully insulated package
- Trench MOS Barrier Schottky technology
- Ultra low forward voltage drop
- Optimized for power conversion: welding and industrial SMPS applications
- Easy to use and parallel
- Industry standard outline
- UL approved file E78996
- Designed and qualified for industrial level
- Material categorization: for definitions of compliance please see www.vishay.com/doc?99912

Pb-free
RoHS COMPLIANT

## DESCRIPTION

The VS-QA250FA20 insulated modules integrate two state of the art Trench MOS Schottky technology rectifiers in the compact, industry standard SOT-227 package.

These devices are thus intended for high frequency converters and switching power supplies.

**MAJOR RATINGS AND CHARACTERISTICS**

| SYMBOL | CHARACTERISTICS | VALUES | UNITS |
|---|---|---|---|
| $V_F$ | $T_J$ = 125 °C | 1.09 | V |
| $T_J$ | Range | -55 to +175 | °C |

**ABSOLUTE MAXIMUM RATINGS** ($T_C$ = 25 °C unless otherwise specified)

| PARAMETER | SYMBOL | TEST CONDITIONS | VALUES | UNITS |
|---|---|---|---|---|
| Maximum average forward current per module | $I_{F(AV)}$ | $T_C$ = 106 °C | 250 | A |
| Maximum cathode to anode voltage | $V_R$ | | 200 | V |
| Maximum continuous forward current per diode | $I_F$ | $T_C$ = 95 °C | 183 | A |
| Maximum single pulse forward current per diode | $I_{FSM}$ | $T_C$ = 175 °C, t = 6 ms, square | 900 | |
| Maximum power dissipation per diode | $P_D$ | $T_C$ = 95 °C | 182 | W |
| Non-repetitive avalanche energy per diode | $E_{AS}$ | $T_J$ = 25 °C, $I_{AS}$ = 19 A, L = 10 mH | 1800 | mJ |
| RMS isolation voltage | $V_{ISOL}$ | Any terminal to case, t = 1 minute | 2500 | V |
| Operating junction and storage temperatures | $T_J$, $T_{Stg}$ | | -55 to +175 | °C |


For technical questions within your region: DiodesAmericas@vishay.com, DiodesAsia@vishay.com, DiodesEurope@vishay.com
THIS DOCUMENT IS SUBJECT TO CHANGE WITHOUT NOTICE. THE PRODUCTS DESCRIBED HEREIN AND THIS DOCUMENT ARE SUBJECT TO SPECIFIC DISCLAIMERS, SET FORTH AT www.vishay.com/doc?91000

| ELECTRICAL SPECIFICATIONS PER DIODE ($T_J$ = 25 °C unless otherwise specified) | | | | | | |
|---|---|---|---|---|---|---|
| PARAMETER | SYMBOL | TEST CONDITIONS | MIN. | TYP. | MAX. | UNITS |
| Cathode to anode breakdown voltage | $V_{BR}$ | $I_R$ = 2 mA | 200 | - | - | V |
| Forward voltage | $V_{FM}$ | $I_F$ = 200 A | - | 1.0 | 1.2 | V |
| | | $I_F$ = 200 A, $T_J$ = 125 °C | - | 0.89 | 1.09 | V |
| Reverse leakage current | $I_{RM}$ | $V_R$ = 200 V | - | 13 | 90 | μA |
| | | $T_J$ = 125 °C, $V_R$ = $V_R$ rated | - | 14 | - | mA |
| Junction capacitance | $C_T$ | $V_R$ = 200 V | - | 380 | - | pF |

| DYNAMIC RECOVERY CHARACTERISTICS ($T_J$ = 25 °C unless otherwise specified) | | | | | | | |
|---|---|---|---|---|---|---|---|
| PARAMETER | SYMBOL | TEST CONDITIONS | | MIN. | TYP. | MAX. | UNITS |
| Reverse recovery time | $t_{rr}$ | $T_J$ = 25 °C | $I_F$ = 50 A<br>$dI_F/dt$ = 200 A/μs<br>$V_R$ = 100 V | - | 54 | - | ns |
| | | $T_J$ = 125 °C | | - | 67 | - | ns |
| Peak recovery current | $I_{RRM}$ | $T_J$ = 25 °C | | - | 6 | - | A |
| | | $T_J$ = 125 °C | | - | 8.4 | - | A |
| Reverse recovery charge | $Q_{rr}$ | $T_J$ = 25 °C | | - | 165 | - | nC |
| | | $T_J$ = 125 °C | | - | 296 | - | nC |

| THERMAL - MECHANICAL SPECIFICATIONS | | | | | | |
|---|---|---|---|---|---|---|
| PARAMETER | SYMBOL | TEST CONDITIONS | MIN. | TYP. | MAX. | UNITS |
| Junction to case, single leg conducting | $R_{thJC}$ | | - | - | 0.44 | °C/W |
| Junction to case, both leg conducting | $R_{thJC}$ | | - | - | 0.22 | °C/W |
| Case to heatsink | $R_{thCS}$ | Flat, greased surface | - | 0.1 | - | °C/W |
| Weight | | | - | 30 | - | g |
| Mounting torque | | Torque to terminal | - | - | 1.1 (9.7) | Nm (lbf.in) |
| | | Torque to heatsink | - | - | 1.8 (15.9) | Nm (lbf.in) |
| Case style | | | SOT-227 | | | |


For technical questions within your region: DiodesAmericas@vishay.com, DiodesAsia@vishay.com, DiodesEurope@vishay.com
THIS DOCUMENT IS SUBJECT TO CHANGE WITHOUT NOTICE. THE PRODUCTS DESCRIBED HEREIN AND THIS DOCUMENT ARE SUBJECT TO SPECIFIC DISCLAIMERS, SET FORTH AT www.vishay.com/doc?91000

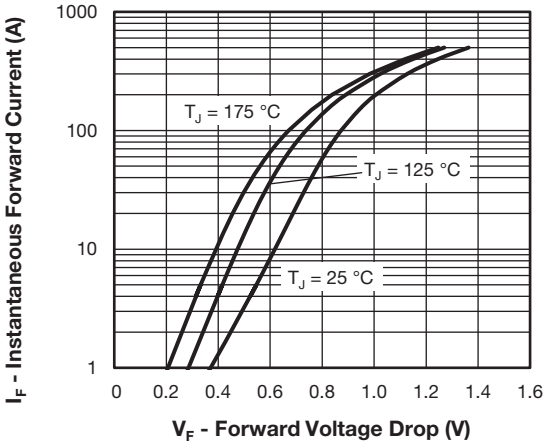


Fig. 1 - Typical Forward Voltage Drop vs. Instantaneous Forward Current (Per Diode)

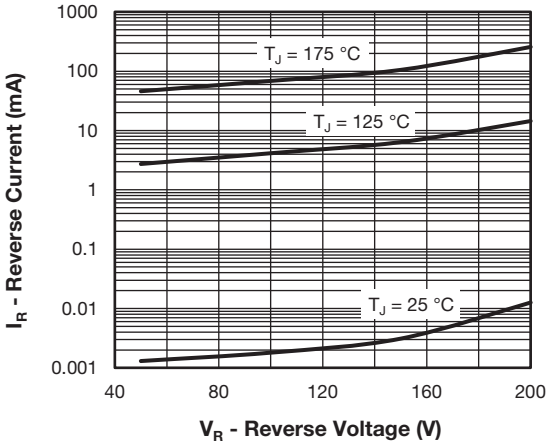


Fig. 2 - Typical Reverse Current vs. Reverse Voltage (Per Diode)

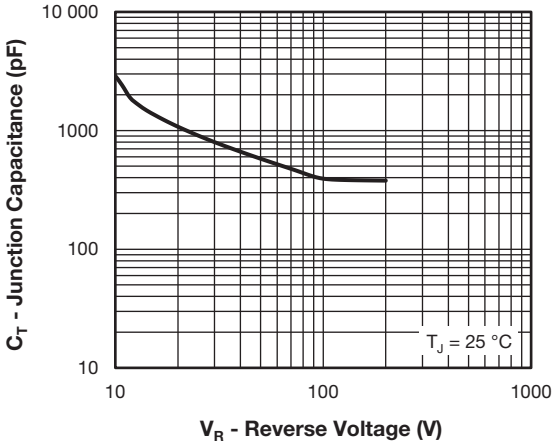


Fig. 3 - Typical Junction Capacitance vs. Reverse Voltage (Per Diode)

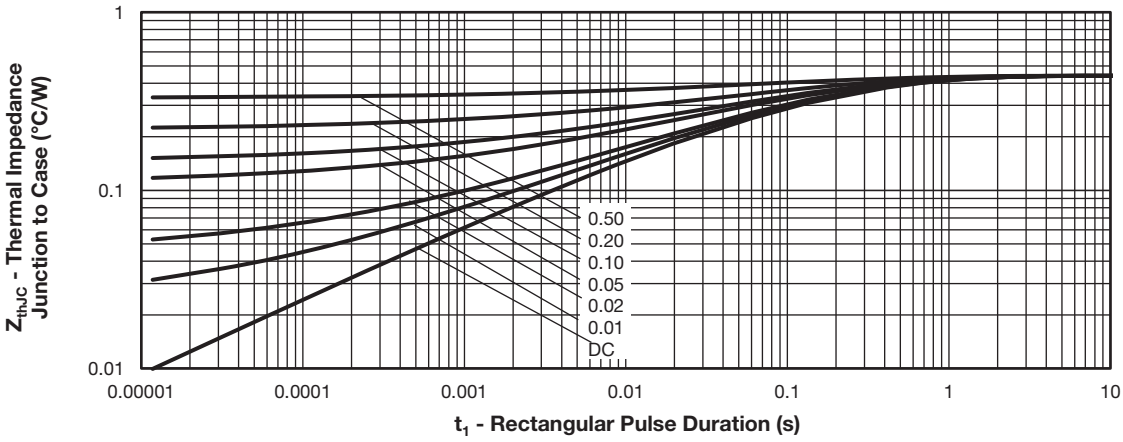


Fig. 4 - Maximum Thermal Impedance $Z_{thJC}$ Characteristics (Per Diode)


For technical questions within your region: DiodesAmericas@vishay.com, DiodesAsia@vishay.com, DiodesEurope@vishay.com
THIS DOCUMENT IS SUBJECT TO CHANGE WITHOUT NOTICE. THE PRODUCTS DESCRIBED HEREIN AND THIS DOCUMENT ARE SUBJECT TO SPECIFIC DISCLAIMERS, SET FORTH AT www.vishay.com/doc?91000

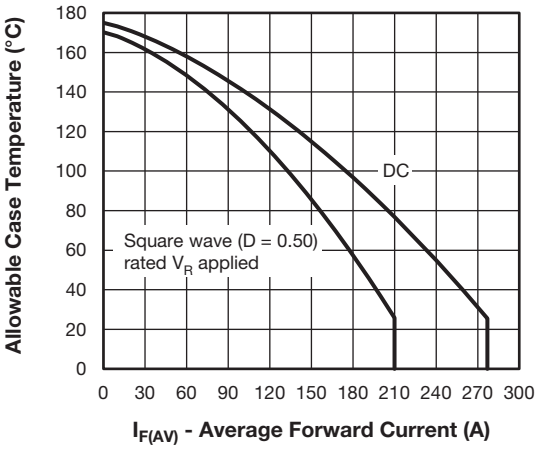


Fig. 5 - Maximum Current Rating Capability (Per Diode)

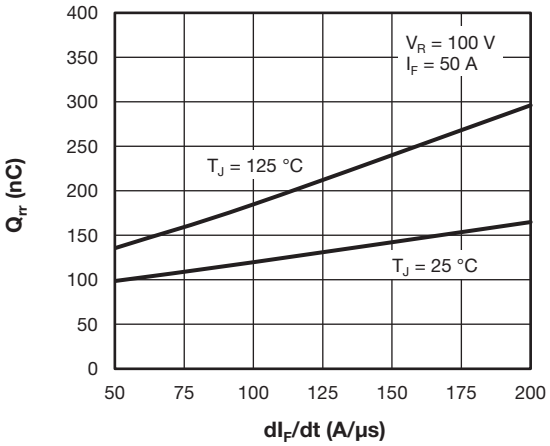


Fig. 7 - Typical Reverse Recovery Charge vs. $dI_F/dt$ (Per Diode)

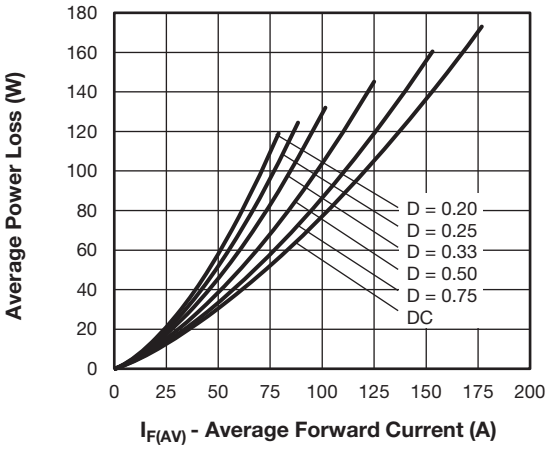


Fig. 6 - Forward Power Loss Characteristics (Per Diode)

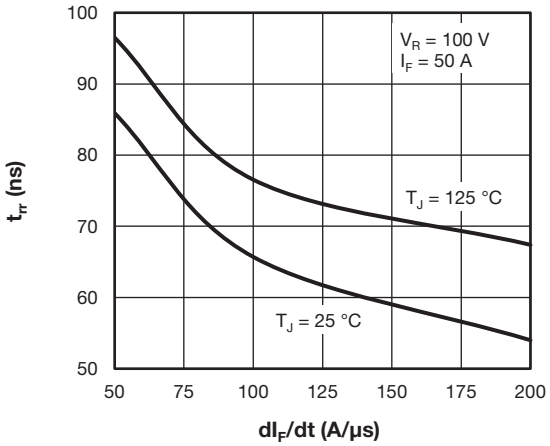


Fig. 8 - Typical Reverse Recovery Time vs. $dI_F/dt$ (Per Diode)

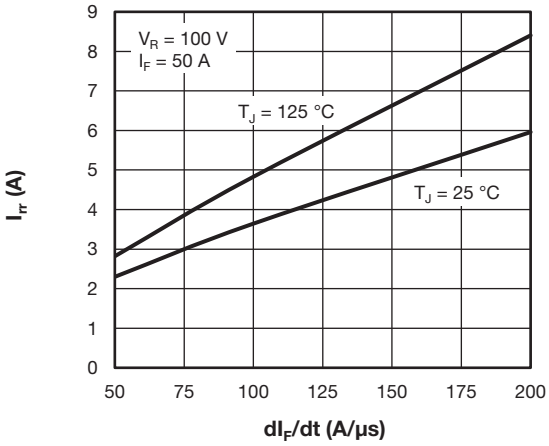


Fig. 9 - Typical Reverse Recovery Current vs. $dI_F/dt$ (Per Diode)


For technical questions within your region: DiodesAmericas@vishay.com, DiodesAsia@vishay.com, DiodesEurope@vishay.com
THIS DOCUMENT IS SUBJECT TO CHANGE WITHOUT NOTICE. THE PRODUCTS DESCRIBED HEREIN AND THIS DOCUMENT ARE SUBJECT TO SPECIFIC DISCLAIMERS, SET FORTH AT www.vishay.com/doc?91000

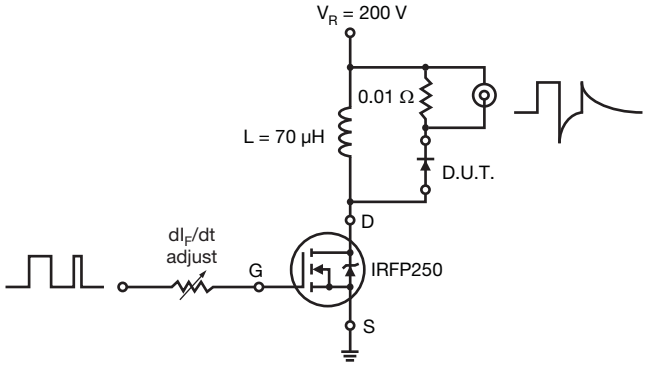


Fig. 10 - Reverse Recovery Parameter Test Circuit

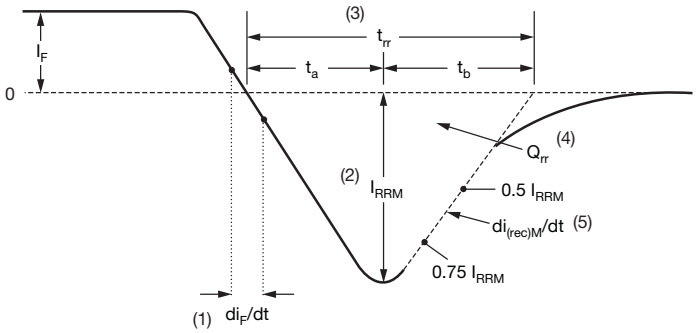


(1) $di_F/dt$ - rate of change of current through zero crossing

(2) $I_{RRM}$ - peak reverse recovery current

(3) $t_{rr}$ - reverse recovery time measured from zero crossing point of negative going $I_F$ to point where a line passing through 0.75 $I_{RRM}$ and 0.50 $I_{RRM}$ extrapolated to zero current.

(4) $Q_{rr}$ - area under curve defined by $t_{rr}$ and $I_{RRM}$

$$Q_{rr} = \frac{t_{rr} \times I_{RRM}}{2}$$

(5) $di_{(rec)M}/dt$ - peak rate of change of current during $t_b$ portion of $t_{rr}$

Fig. 11 - Reverse Recovery Waveform and Definitions

## ORDERING INFORMATION TABLE

| Device code | VS- | Q | A | 250 | F | A | 20 |
|---|---|---|---|---|---|---|---|
| | 1 | 2 | 3 | 4 | 5 | 6 | 7 |

| | | |
|---|---|---|
| 1 | - | Vishay Semiconductors product |
| 2 | - | Schottky technologies |
| 3 | - | Present silicon generation |
| 4 | - | Current rating (250 = 250 A) |
| 5 | - | Circuit configuration (2 separate diodes, parallel pin-out) |
| 6 | - | Package indicator (SOT-227 standard insulated base) |
| 7 | - | Voltage rating (20 = 200 V) |

Quantity per tube is 10, M4 screw and washer included


For technical questions within your region: DiodesAmericas@vishay.com, DiodesAsia@vishay.com, DiodesEurope@vishay.com
THIS DOCUMENT IS SUBJECT TO CHANGE WITHOUT NOTICE. THE PRODUCTS DESCRIBED HEREIN AND THIS DOCUMENT ARE SUBJECT TO SPECIFIC DISCLAIMERS, SET FORTH AT www.vishay.com/doc?91000

| CIRCUIT CONFIGURATION | | |
|---|---|---|
| **CIRCUIT** | **CIRCUIT CONFIGURATION CODE** | **CIRCUIT DRAWING** |
| 2 separate diodes, parallel pin-out | F | 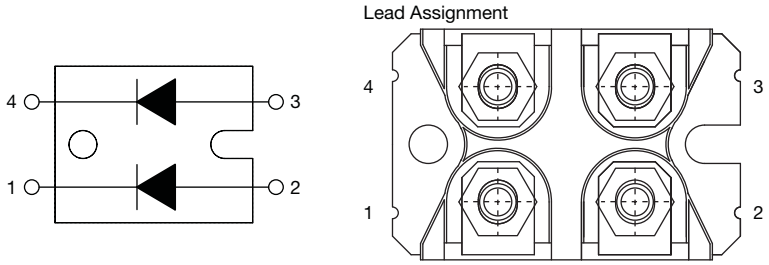  |

| LINKS TO RELATED DOCUMENTS | |
|---|---|
| Dimensions | www.vishay.com/doc?95423 |
| Packaging information | www.vishay.com/doc?95425 |


For technical questions within your region: DiodesAmericas@vishay.com, DiodesAsia@vishay.com, DiodesEurope@vishay.com
THIS DOCUMENT IS SUBJECT TO CHANGE WITHOUT NOTICE. THE PRODUCTS DESCRIBED HEREIN AND THIS DOCUMENT ARE SUBJECT TO SPECIFIC DISCLAIMERS, SET FORTH AT www.vishay.com/doc?91000

# SOT-227 Generation 2

**DIMENSIONS** in millimeters (inches)

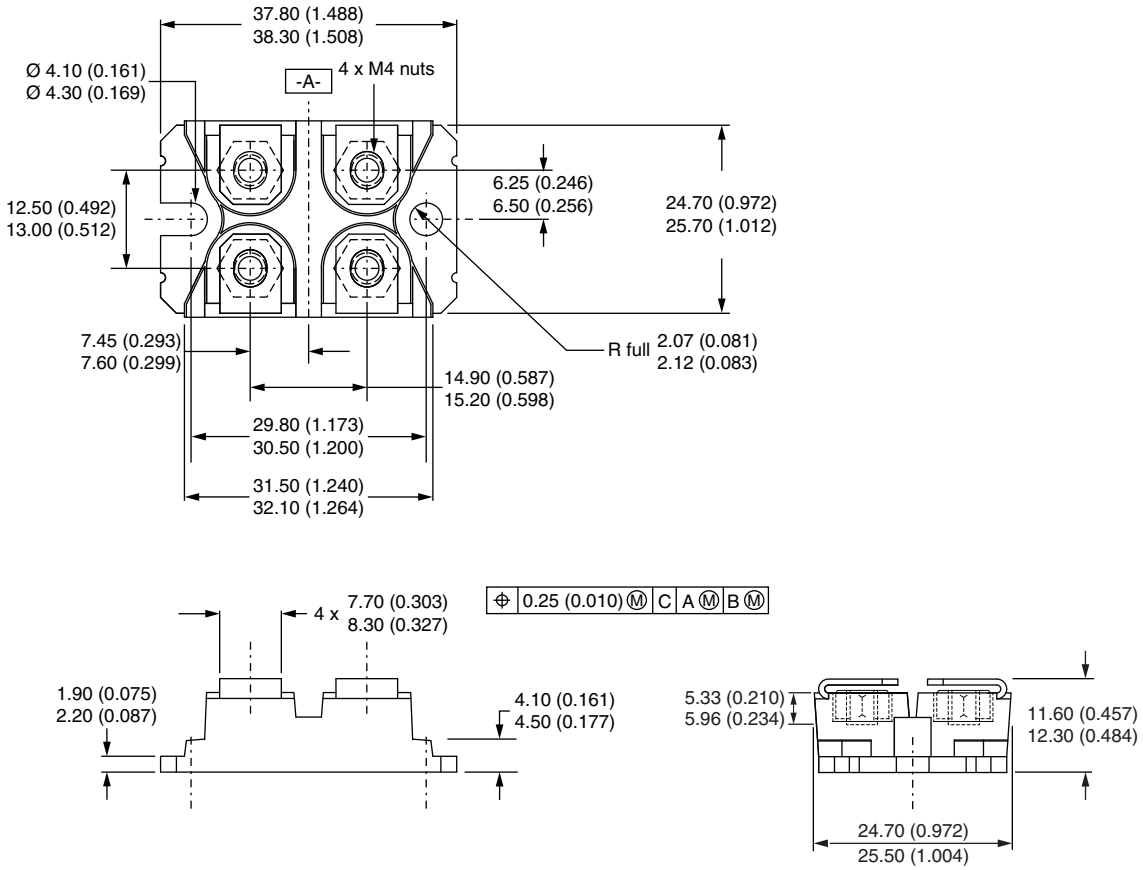


**Note**

- Controlling dimension: millimeter



For technical questions, contact: DiodesAmericas@vishay.com

THIS DOCUMENT IS SUBJECT TO CHANGE WITHOUT NOTICE. THE PRODUCTS DESCRIBED HEREIN AND THIS DOCUMENT ARE SUBJECT TO SPECIFIC DISCLAIMERS, SET FORTH AT www.vishay.com/doc?91000

# Disclaimer

ALL PRODUCT, PRODUCT SPECIFICATIONS AND DATA ARE SUBJECT TO CHANGE WITHOUT NOTICE TO IMPROVE RELIABILITY, FUNCTION OR DESIGN OR OTHERWISE.

Vishay Intertechnology, Inc., its affiliates, agents, and employees, and all persons acting on its or their behalf (collectively, “Vishay”), disclaim any and all liability for any errors, inaccuracies or incompleteness contained in any datasheet or in any other disclosure relating to any product.

Vishay makes no warranty, representation or guarantee regarding the suitability of the products for any particular purpose or the continuing production of any product. To the maximum extent permitted by applicable law, Vishay disclaims (i) any and all liability arising out of the application or use of any product, (ii) any and all liability, including without limitation special, consequential or incidental damages, and (iii) any and all implied warranties, including warranties of fitness for particular purpose, non-infringement and merchantability.

Statements regarding the suitability of products for certain types of applications are based on Vishay's knowledge of typical requirements that are often placed on Vishay products in generic applications. Such statements are not binding statements about the suitability of products for a particular application. It is the customer's responsibility to validate that a particular product with the properties described in the product specification is suitable for use in a particular application. Parameters provided in datasheets and / or specifications may vary in different applications and performance may vary over time. All operating parameters, including typical parameters, must be validated for each customer application by the customer's technical experts. Product specifications do not expand or otherwise modify Vishay's terms and conditions of purchase, including but not limited to the warranty expressed therein.

Hyperlinks included in this datasheet may direct users to third-party websites. These links are provided as a convenience and for informational purposes only. Inclusion of these hyperlinks does not constitute an endorsement or an approval by Vishay of any of the products, services or opinions of the corporation, organization or individual associated with the third-party website. Vishay disclaims any and all liability and bears no responsibility for the accuracy, legality or content of the third-party website or for that of subsequent links.

Vishay products are not designed for use in life-saving or life-sustaining applications or any application in which the failure of the Vishay product could result in personal injury or death unless specifically qualified in writing by Vishay. Customers using or selling Vishay products not expressly indicated for use in such applications do so at their own risk. Please contact authorized Vishay personnel to obtain written terms and conditions regarding products designed for such applications.

No license, express or implied, by estoppel or otherwise, to any intellectual property rights is granted by this document or by any conduct of Vishay. Product names and markings noted herein may be trademarks of their respective owners.

***© 2025 VISHAY INTERTECHNOLOGY, INC. ALL RIGHTS RESERVED***



THIS DOCUMENT IS SUBJECT TO CHANGE WITHOUT NOTICE. THE PRODUCTS DESCRIBED HEREIN AND THIS DOCUMENT ARE SUBJECT TO SPECIFIC DISCLAIMERS, SET FORTH AT www.vishay.com/doc?91000