Data sheet

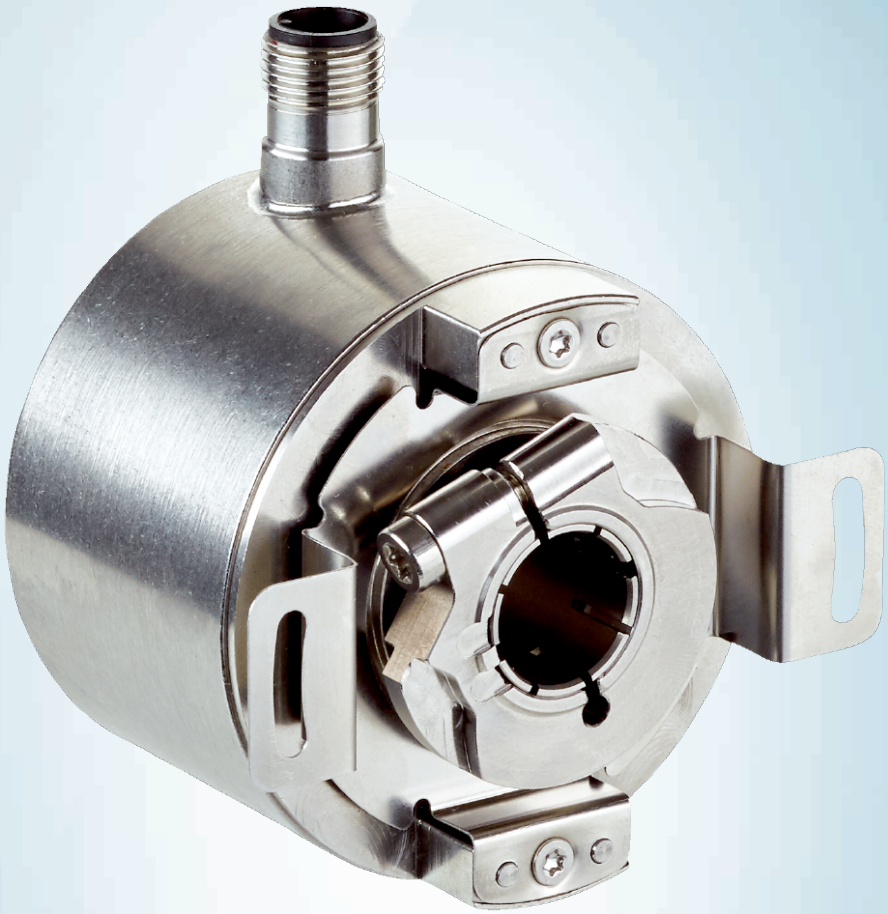

DFS60I-BHPC65536

DFS60

INCREMENTAL ENCODERS

SICK
Sensor Intelligence.



Illustration may differ

Ordering information

Type	part no.
DFS60I-BHPC65536	1091640

Other models and accessories ➜ www.sick.com/DFS60

Detailed technical data

Safety-related parameters

$MTTF_D$ (mean time to dangerous failure)	300 years (EN ISO 13849-1) [1]

[1] This product is a standard product and does not constitute a safety component as defined in the Machinery Directive. Calculation based on nominal load of components, average ambient temperature 40 °C, frequency of use 8760 h/a. All electronic failures are considered hazardous. For more information, see document no. 8015532.

Performance

Pulses per revolution	65,536 [1]
Measuring step	90°, electric/pulses per revolution
Measuring step deviation at binary number of lines	± 0.0015°
Error limits	± 0.03°

[1] See maximum revolution range.

Interfaces

Communication interface	Incremental
Communication Interface detail	TTL / HTL
Factory setting	Factory setting: output level TTL
Number of signal channels	6-channel
Programmable/configurable	✓
Initialization time	32 ms, 30 ms [1]
Output frequency	≤ 820 kHz
Load current	≤ 30 mA
Operating current	40 mA (without load)
Power consumption	≤ 0.7 W (without load)
Load resistance	≥ 120 Ω

[1] With mechanical zero pulse width.

Electronics

Connection type	Male connector, M12, 8-pin, radial
Supply voltage	4.5 ... 32 V
Reference signal, number	1
Reference signal, position	90°, electric, logically gated with A and B
Reverse polarity protection	✓
Short-circuit protection of the outputs	✓ [1) 2)]

[1)] Programming TTL with ≥ 5.5 V: short-circuit opposite to another channel or GND permissable for maximum 30 s.
[2)] Programming HTL or TTL with < 5.5 V: short-circuit opposite to another channel, US or GND permissable for maximum 30 s.

Mechanics

Mechanical design	Blind hollow shaft
Shaft diameter	15 mmFront clamp
Weight	+ 0.5 kg
Shaft material	Stainless steel V2A
Flange material	Stainless steel V2A
Housing material	Stainless steel V2A
Start up torque	1 Ncm (+20 °C)
Operating torque	0.5 Ncm (+20 °C)
Permissible movement static	± 0.3 mm (radial) ± 0.5 mm (axial)
Permissible movement dynamic	± 0.05 mm (radial) ± 0.01 mm (axial)
Operating speed	≤ 6,000 min^{-1} [1)]
Moment of inertia of the rotor	40 gcm^2
Bearing lifetime	3.6 x 10^10 revolutions
Angular acceleration	≤ 500,000 rad/s^2

[1)] Allow for self-heating of 3.3 K per 1,000 rpm when designing the operating temperature range.

Ambient data

EMC	According to EN 61000-6-2 and EN 61000-6-3
Enclosure rating	IP67, housing side (IEC 60529) [1)] IP67, shaft side (IEC 60529)
Permissible relative humidity	90 % (Condensation not permitted)
Operating temperature range	–40 °C ... +100 °C [2)] –30 °C ... +100 °C [3)]
Storage temperature range	–40 °C ... +100 °C, without package
Resistance to shocks	100 g, 6 ms (EN 60068-2-27)
Resistance to vibration	10 g, 10 Hz ... 2,000 Hz (EN 60068-2-6)

[1)] With mating connector fitted.
[2)] Stationary position of the cable.
[3)] Flexible position of the cable.

Classifications

ECLASS 5.0	27270501

ECLASS 5.1.4	27270501
ECLASS 6.0	27270590
ECLASS 6.2	27270590
ECLASS 7.0	27270501
ECLASS 8.0	27270501
ECLASS 8.1	27270501
ECLASS 9.0	27270501
ECLASS 10.0	27270501
ECLASS 11.0	27270501
ECLASS 12.0	27270501
ETIM 5.0	EC001486
ETIM 6.0	EC001486
ETIM 7.0	EC001486
ETIM 8.0	EC001486
UNSPSC 16.0901	41112113

Certificates

EU declaration of conformity	✓
UK declaration of conformity	✓
ACMA declaration of conformity	✓
Moroccan declaration of conformity	✓
China-RoHS	✓
cULus certificate	✓
Information according to Art. 3 of Data Act (Regulation EU 2023/2854)	✓

Dimensional drawing

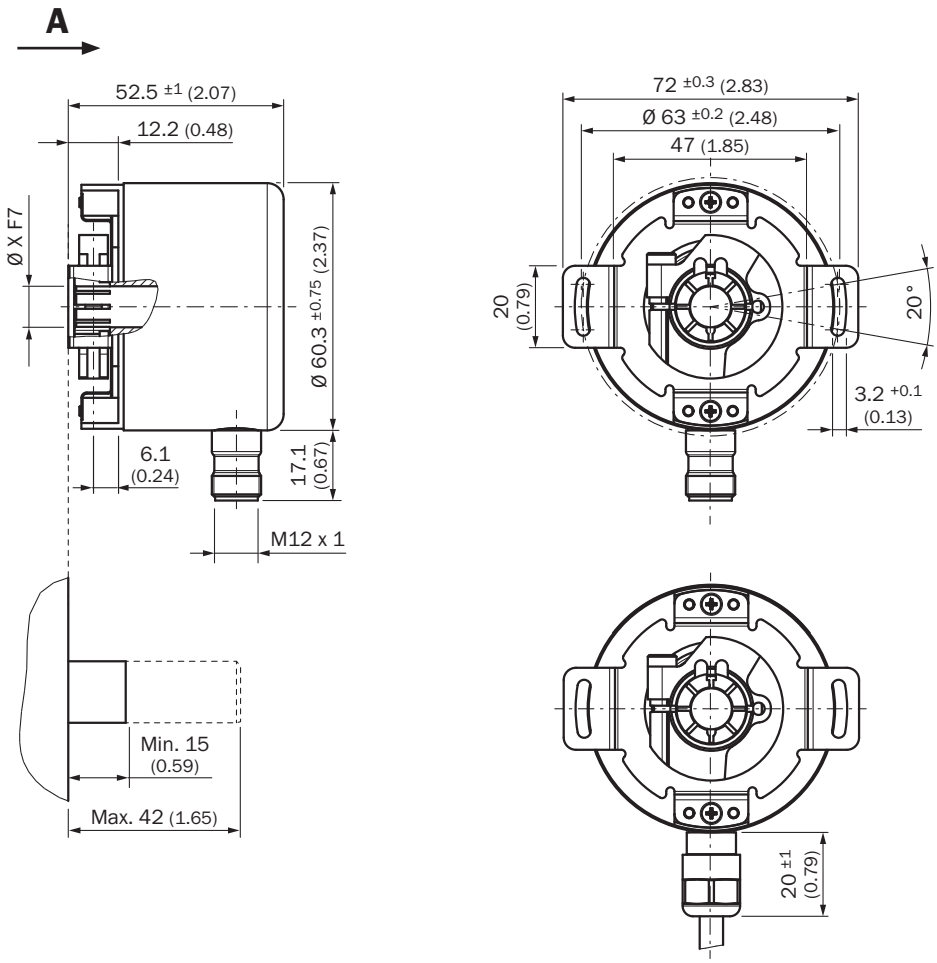

Dimensions in mm (inch)

PIN assignment

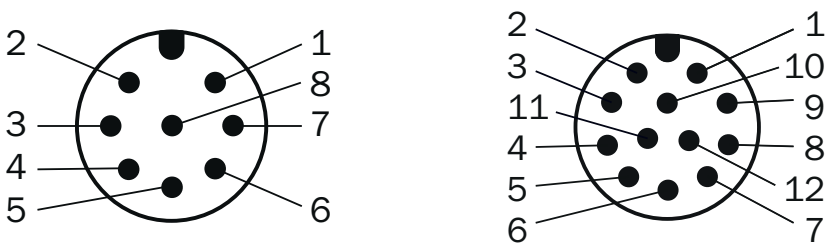

view of M12 male device connector on encoder

Male connector M12, 8-pin	Connector M12, 12-pin	Wire colors (cable connection)	TTL/HTL signal	Sin/Cos 1.0 V_{PP}	Explanation
1	7	Brown	$\overline{A}$	COS-	Signal wire
2	6	White	A	COS+	Signal wire
3	9	Black	$\overline{B}$	SIN-	Signal wire

Male connector M12, 8-pin	Connector M12, 12-pin	Wire colors (cable connection)	TTL/HTL signal	Sin/Cos 1.0 V_{PP}	Explanation
4	8	Pink	B	SIN+	Signal wire
5	4	Yellow	$\overline{Z}$	$\overline{Z}$	Signal wire
6	11	Purple	Z	Z	Signal wire
7	12	Blue	GND	GND	Ground connection
8	5	Red	$+U_S$	$+U_S$	Supply voltage
-	2	-	N.c.	N.c.	Not assigned
-	3	-	N.c.	N.c.	Not assigned
-	1	-	N.c.	N.c.	Not assigned
-	10 [1)]	-	0-SET [1)]	N.c.	Set zero pulse1)
Screen	Screen	Screen	Screen	Screen	Screen connected to housing on encoder side. Connected to ground on control side.

maximum revolution range

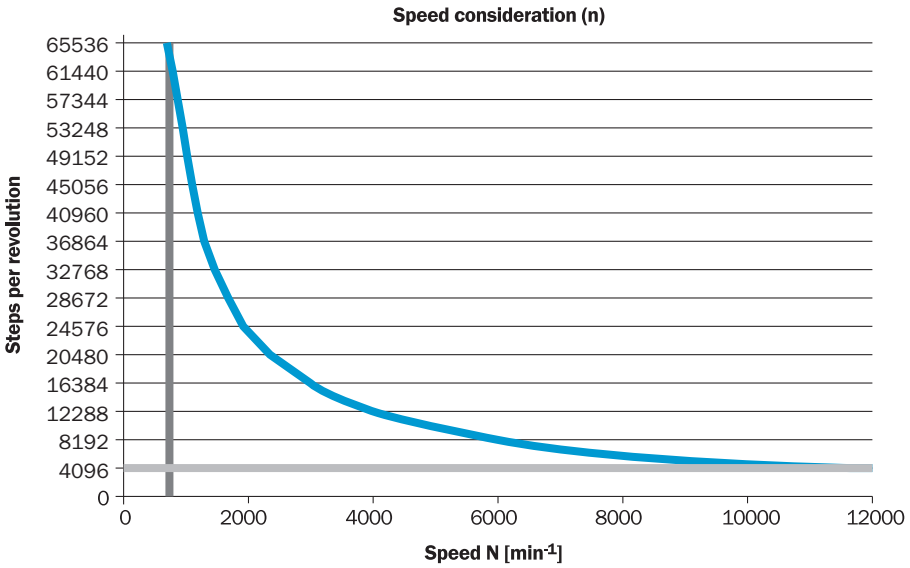

Diagrams Electrical zero pulse width can be configured to 90°, 180°, or 270°. Width of the zero pulse in relation to a pulse period.

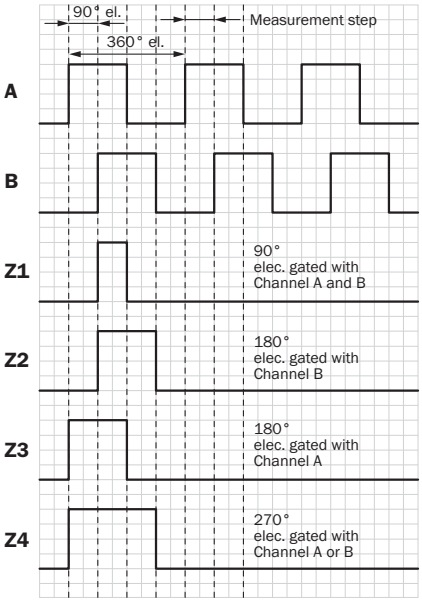

Cw with view on the encoder shaft in direction "A", compare dimensional drawing.

Supply voltage	Output
4,5 V ... 32 V	TTL/HTL programmable

Diagrams Mechanical zero pulse width 1° to 359° programmable. Width of the zero pulse in relation to a mechanical revolution of the shaft.

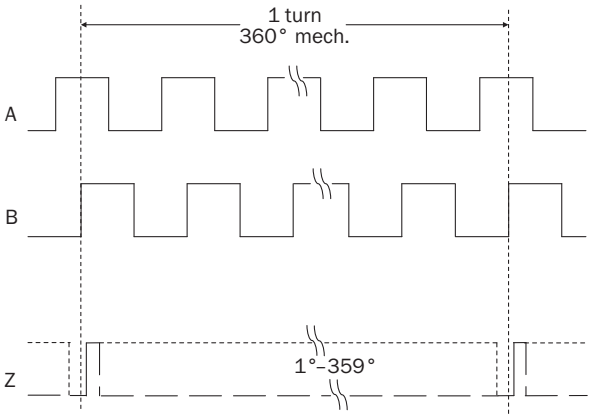

Supply voltage	Output
4,5 V ... 32 V	TTL/HTL programmable

Recommended accessories

Other models and accessories ➜ www.sick.com/DFS60

	Brief description	Type	part no.
Mounting systems			
	• **Product family:** Stator couplings • **Description:** Standard stator coupling	BEF-DS00XFX	2056812
programming devices			
	• **Product segment:** Programming devices • **Product family:** PGT-10 Pro • **Description:** Programming unit display for programmable SICK DFS60, DFV60, AFS/AFM60, AHS/AHM36 encoders, and wire draw encoder with DFS60, AFS/AFM60 and AHS/AHM36. Compact dimensions, low weight, and intuitive operation. • **Items supplied:** 1 x PGT-10-Pro stand-alone programming tool,4 x alkaline type batteries, 1.5 V Mignon (AA)	PGT-10-Pro	1072254
	• **Product segment:** Programming devices • **Product family:** PGT-08-S • **Description:** USB programming unit, for programmable SICK encoders AFS60, AFM60, DFS60, VFS60, DFV60 and wire draw encoders with programmable encoders	PGT-08-S	1036616

	Brief description	Type	part no.
connectors and cables			
	• **Connection type head A:** Female connector, M12, 8-pin, straight • **Connection type head B:** Flying leads • **Signal type:** Incremental, SSI • **Cable:** 2 m, 8-wire, PUR, halogen-free • **Description:** Incremental, shieldedSSI • **Connection systems:** Flying leads	DOL-1208-G02MAC1	6032866
	• **Connection type head A:** Female connector, M12, 8-pin, straight, A-coded • **Connection type head B:** Flying leads • **Signal type:** Incremental, SSI • **Cable:** 2 m, 8-wire, PUR, halogen-free • **Description:** Incremental, shielded, SSI • **Connection systems:** Flying leads	DOL-1208-G02MIE1	2120313
	• **Connection type head A:** Female connector, M12, 8-pin, straight • **Connection type head B:** Flying leads • **Signal type:** Incremental, SSI • **Cable:** 5 m, 8-wire, PUR, halogen-free • **Description:** Incremental, shieldedSSI • **Connection systems:** Flying leads	DOL-1208-G05MAC1	6032867
	• **Connection type head A:** Female connector, M12, 8-pin, straight • **Connection type head B:** Flying leads • **Signal type:** Incremental, SSI • **Cable:** 10 m, 8-wire, PUR, halogen-free • **Description:** Incremental, shieldedSSI • **Connection systems:** Flying leads	DOL-1208-G10MAC1	6032868
	• **Connection type head A:** Female connector, M12, 8-pin, straight • **Connection type head B:** Flying leads • **Signal type:** Incremental, SSI • **Cable:** 20 m, 8-wire, PUR, halogen-free • **Description:** Incremental, shieldedSSI • **Connection systems:** Flying leads	DOL-1208-G20MAC1	6032869
	• **Connection type head A:** Female connector, M12, 8-pin, straight • **Connection type head B:** Flying leads • **Signal type:** Incremental, SSI • **Cable:** 25 m, 8-wire, PUR, halogen-free • **Description:** Incremental, shieldedSSI • **Connection systems:** Flying leads	DOL-1208-G25MAC1	6067859
	• **Connection type head A:** Male connector, M12, 8-pin, straight, A-coded • **Description:** Shielded • **Connection systems:** Screw-type terminals • **Permitted cross-section:** ≤ 0.5 mm² • **Application:** Hygienic and washdown zones	YM12ES8-0050S5586A	2097337
	• **Connection type head A:** Female connector, M12, 8-pin, straight, A-coded • **Signal type:** Incremental, SSI • **Cable:** CAT5, CAT5e • **Description:** Incremental, shieldedSSI • **Connection systems:** IDC quick connection • **Permitted cross-section:** 0.14 mm² ... 0.34 mm²	DOS-1208-GA01	6045001
	• **Connection type head A:** Female connector, M12, 8-pin, straight, A-coded • **Description:** Shielded • **Connection systems:** Screw-type terminals • **Permitted cross-section:** 0.25 mm² ... 0.5 mm² • **Application:** Hygienic and washdown zones	YF12ES8-0050S5586A	2097334
	• **Connection type head A:** Female connector, M12, 8-pin, straight • **Connection type head B:** Male connector, D-Sub, 9-pin, straight • **Signal type:** Incremental • **Cable:** 0.5 m, 8-wire • **Description:** Incremental, shielded • **Note:** Programming adapter cable for programming tool PGT-10-Pro and PGT-08-S	DSL-2D08-G0M5AC3	2046579

SICK AT A GLANCE

SICK is one of the leading manufacturers of intelligent sensors and sensor solutions for industrial applications. A unique range of products and services creates the perfect basis for controlling processes securely and efficiently, protecting individuals from accidents and preventing damage to the environment.

We have extensive experience in a wide range of industries and understand their processes and requirements. With intelligent sensors, we can deliver exactly what our customers need. In application centers in Europe, Asia and North America, system solutions are tested and optimized in accordance with customer specifications. All this makes us a reliable supplier and development partner.

Comprehensive services complete our offering: SICK LifeTime Services provide support throughout the machine life cycle and ensure safety and productivity.

For us, that is “Sensor Intelligence.”

WORLDWIDE PRESENCE:

Contacts and other locations –www.sick.com