EV7731-F-00A

30W Class D Mono Bridged Audio Amplifier

DESCRIPTION

The EV7731-F-00A is the evaluation board for the MP7731, a mono, 30W Class D Audio Amplifier. It is one of MPS' products of fully integrated audio amplifiers which dramatically reduce solution size by integrating the following:

Start Up / Shut Down Pop Elimination

Short Circuit Protection Circuits

180mΩ Power MOSFETs

Mute / Standby Mode

The MP7731 utilizes a full bridge output structure capable of delivering 30W into 4Ω speakers. As in all other MPS Class D Audio Amplifiers, this device exhibits the high fidelity of a Class AB amplifier with an efficiency of 90%. The circuit is based on the MPS' proprietary variable frequency topology Analog Adaptive Modulation that delivers excellent linearity, fast response time and operates on a single power supply.

FEATURES

- 30W into 4Ω with V_{DD} = 16.5V
- 93% Efficiency at 19W with VDD=16.5V, 8Ω load
- Low THD+N (0.1% at 1W, 8Ω, 1kHz)
- 9.5V to 18V Supply Voltage Operation

APPLICATIONS

- Flat Panel LCD and PDP Displays
- Notebook and Multimedia Computers
- Televisions
- Home Stereos
- DVD and VCD Players
- Game Devices and Systems
- Monitors

"MPS" and "The Future of Analog IC Technology" are Trademarks of Monolithic Power Systems, Inc.

AAM (Analog Adaptive Modulation) is a Trademark of Monolithic Power Systems, Inc.

EV7731-F-00A EVALUATION BOARD

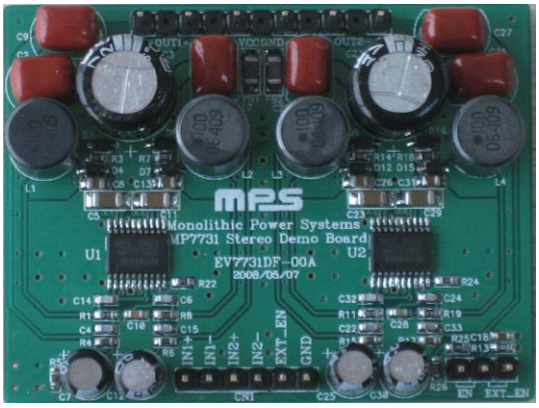

Dimensions (2.2"X x1.7"Y x 0.8"Z)

Board Number	MPS IC Number
EV7731-F-00A	MP7731

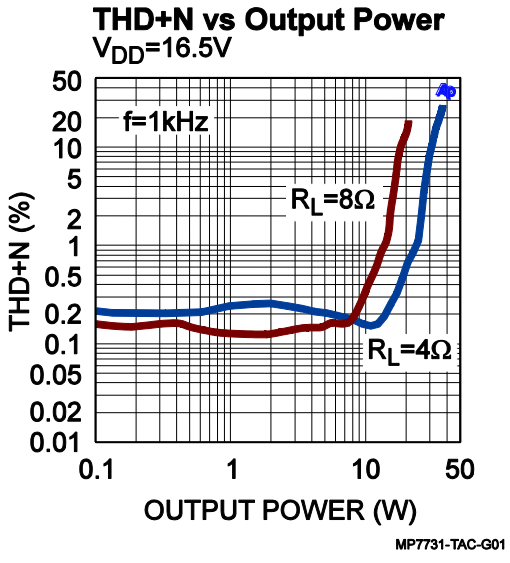

MPS Proprietary Information. Unauthorized Photocopy and Duplication Prohibited.
© 2019 MPS. All Rights Reserved.

EVALUATION BOARD SCHEMATIC

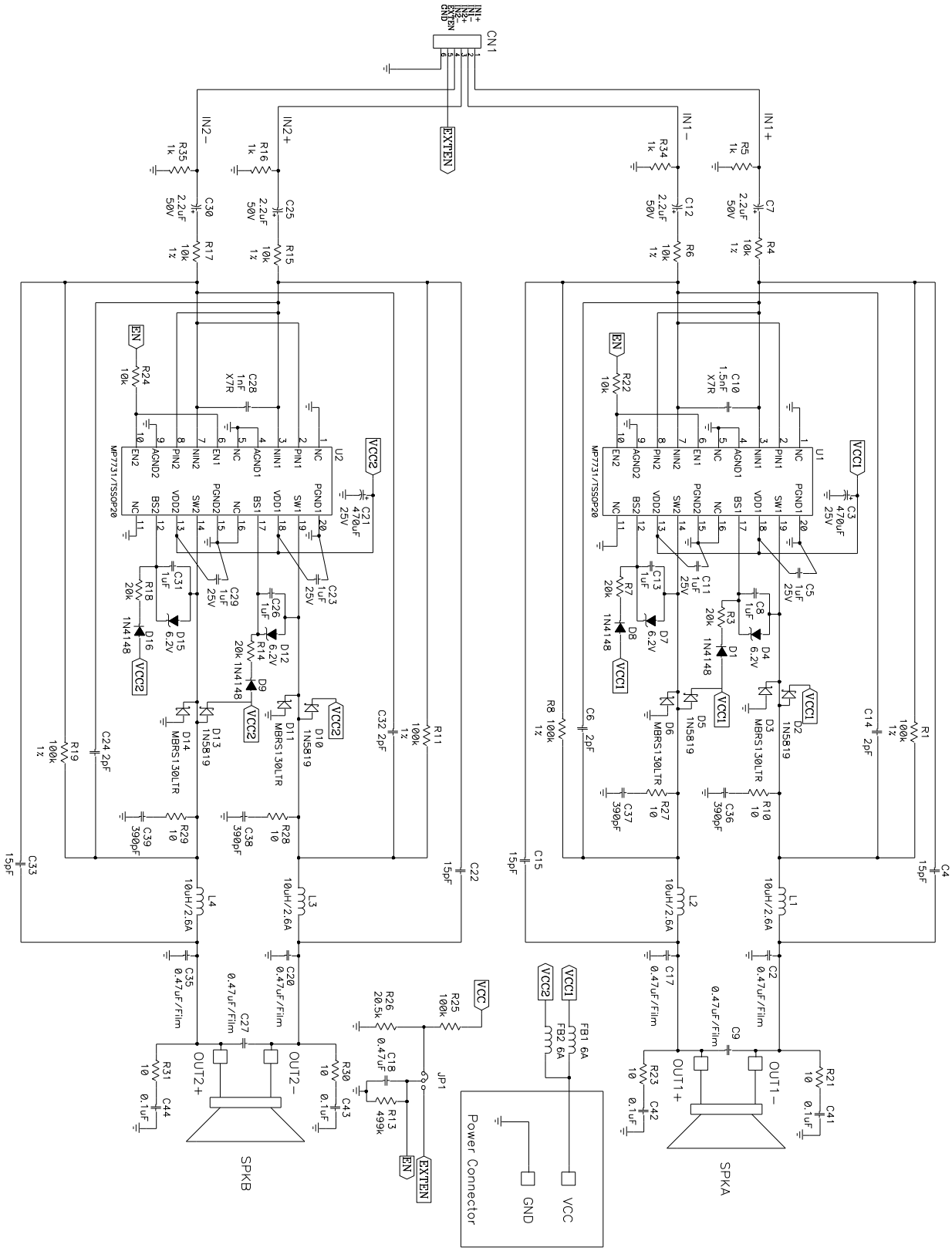

MPS Proprietary Information. Unauthorized Photocopy and Duplication Prohibited.
© 2019 MPS. All Rights Reserved.

EV7731-F-00A BILL OF MATERIALS

Qty	Ref	Value	Description	Package	Manufacturer	Manufacturer P/N
2	C3,C21	470uF	Electrolytic Capacitor, 25V	Radial	JH	CD287-25V470
4	C7,C12, C25,C30	2.2uF	Electrolytic Capacitor, 50V	Radial	Rubycon	
1	C10	1.5nF	Ceramic Capacitor, 50V,X7R	0603	muRata	GRM188R71H152KA01
1	C28	1nF	Ceramic Capacitor, 50V,X7R	0603	muRata	GRM188R71H102KA01D
4	C5,C11, C23,C29	1uF	Ceramic Capacitor, 25V,X7R	1206	muRata	GRM31MR71E105KA01
4	C8,C13, C26,C31	1uF	Ceramic Capacitor, 50V,X7R	0805	muRata	GRM21BR71H105KA12L
4	C6,C14, C24,C32	2pF	Ceramic Capacitor, 50V,COG	0603	TDK	C1608COG1H020CT
4	C4,C15,C 22,C33	15pF	Ceramic Capacitor, 50V,COG	0603	TDK	C1608COG1H150J
4	C36,C37, C38,C39	390pF	Ceramic Capacitor, 50V,COG	0603	muRata	GRM1885C1H391JA01D
4	C41,C42, C43,C44	0.1uF	Ceramic Capacitor, 50V,X7R	0603	muRata	GRM188R71H104KA93D
1	C18	0.47uF	Ceramic Capacitor, 16V,X7R	0603	muRata	GRM188R71C474KA88D
6	C2,C17, C20,C35, C9,C27	0.47uF	FILM,50V	Radial	Any	
4	D3, D6, D11, D14		Diode Schottky, 30V, 1A	SMB	IR	MBRS130LTR
4	D4, D7, D12, D15		Zener Diode, 6.2V	SOD-323	Diodes Inc	BZT52C6V2S-7
4	D2, D5, D10, D13		Diode, 40V	SOD-123	Diodes Inc	1N5819HW
4	D1, D8, D9, D16		Diode, 75V	SOD-323	Diodes Inc	1N4148WS-7
2	FB1, FB2		Ferrite Bead, 6A	1206	LION	PB321611-320
1	CN1		6-Pins Sip Header, 0.1"		Any	
4	L1, L2, L3,L4	10uH	Inductor, 3.6A	Radial	Toko	8RDY-A7040HN-100M
4	R5,R16, R34,R35	1K	Film Resistor, 1%	0603	Yageo	RC0603FR-071KL
6	R4,R6, R15,R17, R22,R24	10K	Film Resistor, 1%	0603	Yageo	RC0603FR-0710KL
5	R1,R8, R11,R19, R25	100K	Film Resistor, 1%	0603	Yageo	RC0603FR-07100KL
4	R3,R7, R14,R18	20K	Film Resistor, 1%	0603	Yageo	RC0603FR-0720KL

EV7731-F-00A BILL OF MATERIALS *(continued)*

MPS Proprietary Information. Unauthorized Photocopy and Duplication Prohibited.
© 2019 MPS. All Rights Reserved.

Qty	Ref	Value	Description	Package	Manufacturer	Manufacturer P/N
1	R13	499K	Film Resistor, 1%	0603	Yageo	RC0603FR-07499KL
1	R26	20.5K	Film Resistor, 1%	0603	Yageo	RC0603FR-0720K5L
4	R10,R27, R28,R29	10	Film Resistor, 5%	1206	Yageo	RC1206JR-0710R
4	R21,R23, R30,R31	10	Film Resistor, 1%	0603	Yageo	RC0603FR-0710RL
2	U1,U2		Class D Audio Amplifier	TSSOP-20	MPS	MP7731DF

MPS Proprietary Information. Unauthorized Photocopy and Duplication Prohibited.
© 2019 MPS. All Rights Reserved.

PRINTED CIRCUIT BOARD LAYOUT

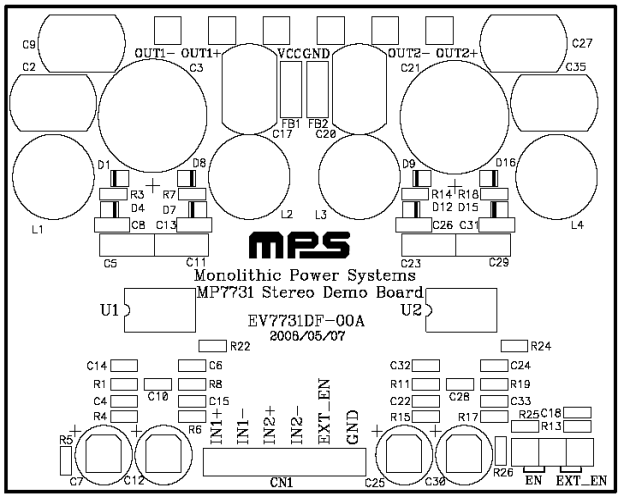

Figure 1—Top Silk Layer

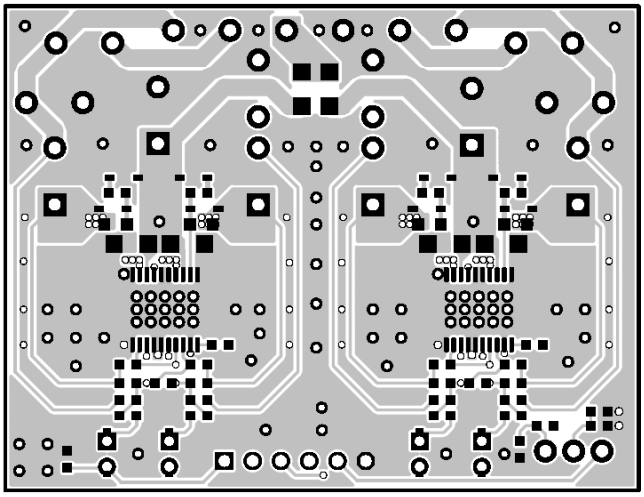

Figure 2—Top Layer

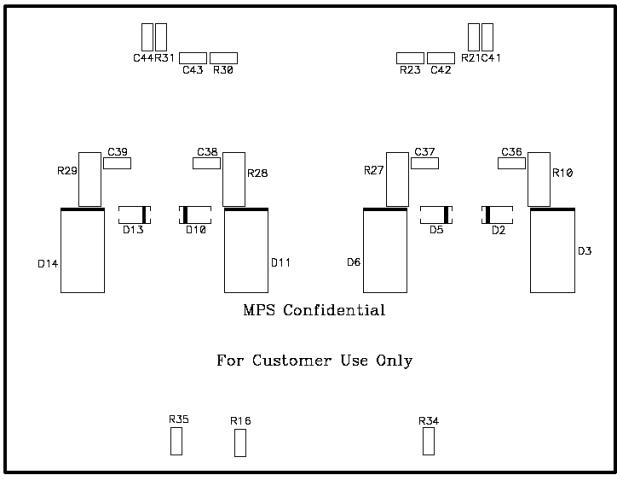

Figure 3—Bottom Silk Layer

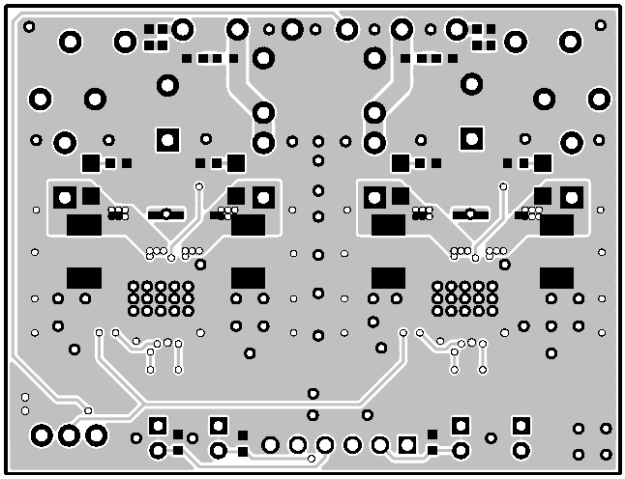

Figure 4—Bottom Layer

MPS Proprietary Information. Unauthorized Photocopy and Duplication Prohibited.
© 2019 MPS. All Rights Reserved.

QUICK START GUIDE

Power Requirements

1. Power supply: 9.5V to 18V.
2. 0 -1V_{RMS} (max) audio signal source.
3. Speaker: 4Ω or 8Ω.

Setup Condition for 12V Operation

4. Connect speaker outputs to OUT1+, OUT1-, OUT2+, OUT2- respectively.
5. Connect the audio inputs to IN1, GND, IN2 respectively.
6. Adjust the power supply to 12V, (do not turn on).
7. Connect the power supply to the VCC, GND terminals.
8. Apply power to the board.
9. Audio should be heard from the speaker(s).

NOTICE: The information in this document is subject to change without notice. Please contact MPS for current specifications. Users should warrant and guarantee that third party Intellectual Property rights are not infringed upon when integrating MPS products into any application. MPS will not assume any legal responsibility for any said applications.

MPS Proprietary Information. Unauthorized Photocopy and Duplication Prohibited.
© 2019 MPS. All Rights Reserved.