Surge Protection Devices
SPD2 2P+0 SERIES

Class II/Type 2/Type 1 CA Pluggable Multi-Pole



Internal Configuration

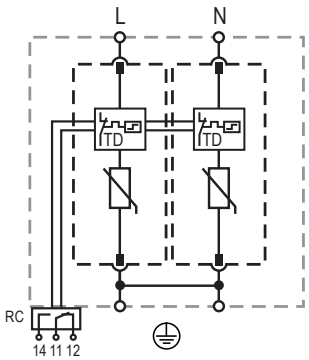

Legend

L *Line*
N *Neutral*
⏚ *Protective Earth*
RC *Remote Contacts*
TD *Thermal Disconnection*

Description

Surge protection devices (SPDs) provide equipment protection from transient overvoltage events lasting micro-seconds. By limiting the overvoltage to the equipment during these events, costly damage and downtime can be mitigated.

The surge protection devices for the 2+0 configuration are available for 120 V to 600 V nominal voltage sub-distribution board applications.

Features & Benefits

FEATURES	BENEFITS
Capability to clamp and withstand high-energy transients	Ensures low-residual voltage during high-energy surge events and higher nominal discharge current to prevent disruption, downtime, and degradation or damage to equipment
UL Recognized and VDE-IEC compliant in single part number	One component can be utilized globally, reducing inventory needs and simplifying allocation of parts
Interlocking tab mechanism	Secures module to withstand vibration
No additional overcurrent protection devices required in UL applications	Reduces the number of components and costs required for protection
Compact footprint	Increases panel design flexibility
Visual life indicator	Quick visual determines module replacement status to avoid loss of protection
Pluggable modules	Fast and simple to replace, minimizing maintenance and downtime. No tools required
Thermal protection	Eliminates catastrophic failure
IP20 protection rating	Finger-safe design increases worker protection

Module & Base Ordering Information

Ordering Number	IEC Electrical								UL Electrical				Single Unit Weight
	Nominal AC Voltage (50/60Hz) (U_o/U_n)	Maximum Continuous Operating AC Voltage (U_c)	Nominal Discharge Current (8/20 µs) (I_n)	Maximum Discharge Current (8/20 µs) (I_{max})	Voltage Protection Level (U_p)	Short-Circuit AC Current Rating (I_{SCCR})	TOV Withstand 5 s (U_T)	TOV 120 min (U_T) / Mode	Maximum Continuous AC Operating Voltage (MCOV)	Voltage Protection Rating (VPR)	Nominal Discharge Current (8/20 µs) (I_n)	Short-Circuit Current Rating (SCCR)	
SPD2-150-2P0-R	120 V	150 V	20 kA	50 kA	1250 V	25 kA / 50 kA	229 V	229 V / Withstand	150 V	600 V	20 kA	200 kA	252 g (0.556 lb)
SPD2-300-2P0-R	240 V	300 V	20 kA	50 kA	1500 V	25 kA / 50 kA	337 V	442 V / Safe Fail	300 V	900 V	20 kA	150 kA	266 g (0.587 lb)
SPD2-350-2P0-R	277 V	350 V	20 kA	50 kA	1750 V	25 kA / 50 kA	403 V	529 V / Safe Fail	350 V	1000 V	20 kA	200 kA	276 g (0.609 lb)
SPD2-480-2P0-R	400 V	480 V	20 kA	50 kA	2300 V	25 kA / 50 kA	581 V	762 V / Safe Fail	480 V	1500 V	20 kA	200 kA	286 g (0.631 lb)
SPD2-550-2P0-R*	480 V	550 V	20 kA	50 kA	2500 V	25 kA / 50 kA	697 V	915 V / Safe Fail	550 V	2000 V	20 kA	200 kA	290 g (0.639 lb)
SPD2-750-2P0-R	600 V	750 V	20 kA	35 kA	3400 V	25 kA / 50 kA	871 V	1143 V / Safe Fail	750 V	2500 V	20 kA	200 kA	318 g (0.702 lb)

© 2019 Littelfuse, Inc.

Surge Protection Devices
SPD2 2P+0 SERIES

Module & Base Part Numbering System

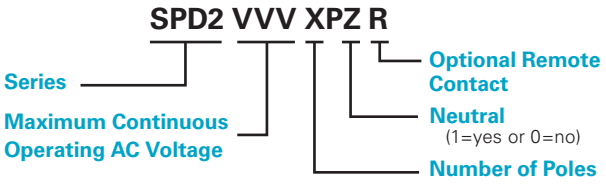

Module Only Part Numbering System



Replacement Module Ordering Information

Ordering Number	IEC Electrical								UL Electrical				Single Unit Weight
	Nominal AC Voltage (50/60Hz) (U_o/U_n)	Maximum Continuous Operating AC Voltage (U_c)	Nominal Discharge Current (8/20 µs) (I_n)	Maximum Discharge Current (8/20 µs) (I_{max})	Voltage Protection Level (U_p)	Short-Circuit AC Current Rating (I_{SCCR})	TOV Withstand 5 s (U_T)	TOV 120 min (U_T) / Mode	Maximum Continuous AC Operating Voltage (MCOV)	Voltage Protection Rating (VPR)	Nominal Discharge Current (8/20 µs) (I_n)	Short-Circuit Current Rating (SCCR)	
SPD2-150-M	120 V	150 V	20 kA	50 kA	1250 V	25 kA / 50 kA	229 V	229 V / Withstand	150 V	600 V	20 kA	200 kA	54 g (0.120 lb)
SPD2-300-M	240 V	300 V	20 kA	50 kA	1500 V	25 kA / 50 kA	337 V	442 V / Safe Fail	300 V	900 V	20 kA	150 kA	61 g (0.135 lb)
SPD2-350-M	277 V	350 V	20 kA	50 kA	1750 V	25 kA / 50 kA	403 V	529 V / Safe Fail	350 V	1000 V	20 kA	200 kA	66 g (0.146 lb)
SPD2-480-M	400 V	480 V	20 kA	50 kA	2300 V	25 kA / 50 kA	581 V	762 V / Safe Fail	480 V	1500 V	20 kA	200 kA	71 g (0.157 lb)
SPD2-550-M*	480 V	550 V	20 kA	50 kA	2500 V	25 kA / 50 kA	697 V	915 V / Safe Fail	550 V	2000 V	20 kA	200 kA	74 g (0.163 lb)
SPD2-750-M	600 V	750 V	20 kA	35 kA	3400 V	25 kA / 50 kA	871 V	1143 V / Safe Fail	750 V	2500 V	20 kA	200 kA	87 g (0.192 lb)

Specifications

Network Systems IT, TN-S
Mode of Protection L-PE, N-PE
Nominal Discharge Current (8/20 µs) (I_n) 20 kA
Maximum Discharge Current (8/20 µs) (I_{max}) Up to 50 kA
Protective Elements High Energy MOV
Response Time (t_A) < 25 ns
Back-Up Fuse (max) 315 A / 250 A Gg
Number of Ports 1

Mechanical & Environmental

Operating Temperature Range (T_a) -40 °C to +80 °C (-40 °F to +185 °F)
Permissible Operating Humidity (RH) 5% to 95%
Altitude (max) 4,000 m (13,123 ft)
Terminal Screw Torque) (M_{max}) 4.5 Nm (39.9 lbf-in)
Conductor Cross Section (max) 35 mm² (2 AWG) (Solid, Stranded)/ 25 mm² (4 AWG) (Flexible)
Mounting 35 mm DIN Rail, EN60715
Degree of Protection IP20 (built-in)
Housing Material Thermoplastic: Extinguishing Degree UL 94 V-0
Thermal Protection Yes
Operating State/Fault Indication Green Flag/No Green Flag
Remote Contact Switching Capacity AC: 250 V/1 A, 125 V/1 A; DC: 48 V/0.5 A, 24 V/0.5 A, 12 V/0.5 A
Remote Contact Conductor Cross Section (max) 1.5 mm² (16 AWG) (Solid)
Standards Passed* IEC 61643-11:2011
EN 61643-11:2012
UL 1449, 4th edition; E320116

Dimensions & Packaging

2TE Module and Base **H** 90.0 mm (3.54"); **W** 36.0 mm (1.42"); **D** 70.0 mm (2.76")
1TE Replacement Module **H** 45.0 mm (1.77"); **W** 18.0 mm (0.71"); **D** 57.2mm (2.25")

Package Dimensions

2TE Module and Base **H** 102.0 mm (4.01"); **W** 46.0 mm (1.81"); **D** 110.0 mm (4.33")
1TE Replacement Module **H** 102.0 mm (4.01"); **W** 28.0 mm (1.10"); **D** 110.0 mm (4.33")

*SPD2-550-2P0-R and SPD2-550-M are UL Listed only

Warranty – Visit **www.littelfuse.com/warranty** for details.

Disclaimer Notice – Information furnished is believed to be accurate and reliable. However, users should independently evaluate the suitability of and test each product selected for their own applications. Littelfuse products are not designed for, and may not be used in, all applications. Read complete Disclaimer Notice at **www.littelfuse.com/product-disclaimer.**

© 2019 Littelfuse, Inc.