VS-04-2X2X26C7/7-SDA/SDA/3,5 - Patch cable

1563151

https://www.phoenixcontact.com/us/products/1563151

Please be informed that the data shown in this PDF document is generated from our online catalog. Please find the complete data in the user documentation. Our general terms of use for downloads are valid.



Assembled USB cable, shielded, color: RAL 5021 (water blue), PUR outer sheath, USB type A/standard on USB type A/standard, length: 3.5 m

Commercial data

Item number	1563151
Packing unit	1 pc
Minimum order quantity	1 pc
Note	Made to order (non-returnable)
Sales key	AB14
Product key	ABNDBA
GTIN	4046356302531
Weight per piece (including packing)	229.5 g
Weight per piece (excluding packing)	220.5 g
Customs tariff number	85444290
Country of origin	DE

Technical data

Product properties

Product type	Patch cable
Sensor type	USB 2.0
Number of positions	4
Shielded	yes

Insulation characteristics

Degree of pollution	2

Electrical properties

Rated voltage (III/3)	125 V
Rated current	1 A
Transmission medium	Copper
Transmission characteristics (category)	USB 2.0
Wave impedance	100 Ω

Material specifications

Housing material	PA
Outer sheath, material	PUR
Conductor material	Bare Cu litz wires

Cable/line

FireWire [980]

Shielded	yes
Cable weight	59 kg/km
Cable type	FireWire
Cable type (abbreviation)	980
Signal type/category	USB CAT7, 480 Mbps
	FireWire CAT7, 400 Mbps
Cable structure	2x2xAWG26/7 + 2xAWG20/19, S/FTP
External cable diameter	6.70 mm
Outer sheath, material	PUR
External sheath, color	water blue RAL 5021
Conductor material	Bare Cu litz wires
Conductor structure signal line	7x 0.15 mm
AWG signal line	26
Conductor structure, voltage supply	19x 0.20 mm
Conductor cross section	2x 2x 0.14 mm² (Signal line)
AWG power supply	20
Material wire insulation	Cell PE (Signal line)
	PVC (Power supply)

Wire diameter incl. insulation	≤ 1.05 mm (Signal line)
	nom. 1.4 mm (Power supply)
Single wire, color	white-blue, white-orange, white, black
Twisted pairs	2 cores to the pair
Type of pair shielding	Aluminum-lined polyester foil
Overall twist	Two pairs and two power supply wires to the core
Shielding	Tinned copper braided shield
Nominal voltage, cable	≤ 125 V
Test voltage, cable	1000 V
Cable resistance	150 Ω/km
Cable insulation resistance	5 GΩ*km
Coupling resistance	5.00 mΩ/m (at 10 MHz)
Wave impedance	100 Ω ±5 % (at 100 MHz)
Working capacitance	42 pF (per meter)
Signal runtime	4.6 ns/m
Signal speed	0.72 c
Interference suppression	90.00 dB (up to 1000 MHz)
Tensile strength	≤ 30 N
Minimum bending radius, fixed installation	5 x D
Minimum bending radius, flexible installation	5 x D
Shield attenuation	60.00 dB (up to 1000 MHz)
Resistance to oil	in accordance with EN 60811-2-1
Flame resistance	complying with IEC 60332-2-2
Other resistance	Microbe resistance as per DIN VDE 0282
	Hydrolysis resistance as per DIN 53504
Special properties	Free of substances which would hinder coating with paint or varnish
Ambient temperature (operation)	-10 °C ... 50 °C (Cable, flexible installation)
	-40 °C ... 70 °C (cable, fixed installation)

Mechanical properties

Mechanical data

Insertion/withdrawal cycles	≥ 500

Environmental and real-life conditions

Ambient conditions

Degree of protection	IP20
	IP20
Ambient temperature (operation)	-20 °C ... 60 °C (cable, fixed installation)
	0 °C ... 50 °C (Cable, flexible installation)
	Plug / socket

Drawings

Dimensional drawing

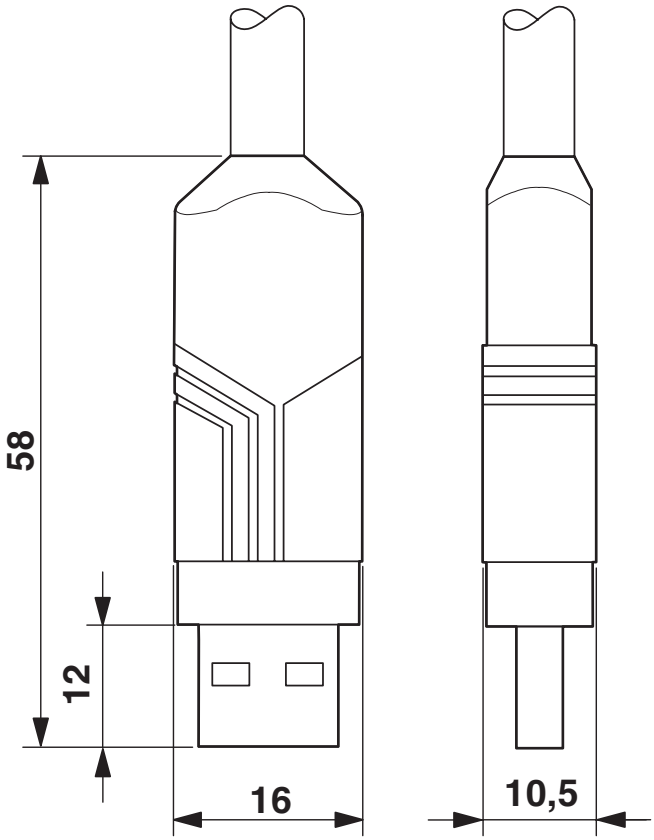

USB connector, type A, Standard

Schematic diagram

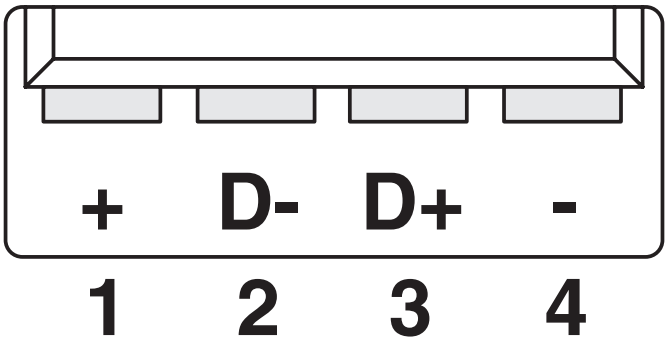

Pin assignment plug USB, type A

Circuit diagram

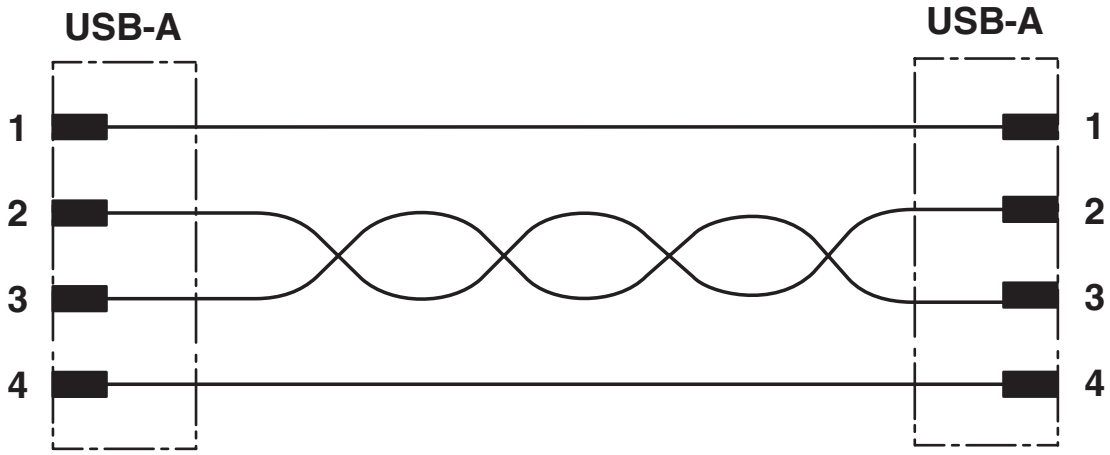

Classifications

ECLASS

ECLASS-11.0	27060390
ECLASS-12.0	27060390
ECLASS-13.0	27060390

ETIM

ETIM 9.0	EC000748

UNSPSC

UNSPSC 21.0	26121600

Environmental product compliance

EU RoHS

Fulfills EU RoHS substance requirements	Yes, No exemptions

China RoHS

Environment friendly use period (EFUP)	EFUP-E
	No hazardous substances above the limits

EU REACH SVHC

REACH candidate substance (CAS No.)	No substance above 0.1 wt%

Accessories

VS-SCRJ-PC - Protective cover

1653757

https://www.phoenixcontact.com/us/products/1653757



IP67 protective cover, for covering the male inserts in the sleeve housings IP67, VS-SC-RJ-..., VS-04-..., VS-06-... and VS-08-...

Phoenix Contact 2024 © - all rights reserved
https://www.phoenixcontact.com

Phoenix Contact USA
586 Fulling Mill Road
Middletown, PA 17057, United States
(+717) 944-1300
info@phoenixcon.com