SSHB10HS-13030

Aliases (UALSB1S1303000)

Dual Mode Chokes, KEMET, SSHB10HS, Through-Hole, Dual Mode

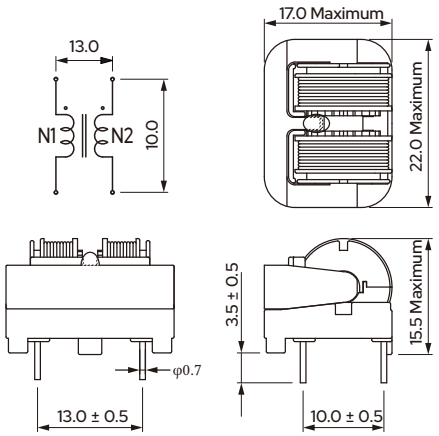

Click here for the 3D model.

General Information	
Series	SSHB10HS
Style	Through-Hole
RoHS	Yes
Notes	Marking: 13 Lot No.
Miscellaneous	Temperature Rise Maximum: 50 K.
Core	Mn-Zn Ferrite

Dimensions	
L	22mm MAX
T	17mm MAX
H	15.5mm MAX
LL	3.5mm +/-0.5mm
S	13mm +/-0.5mm
S1	10mm NOM
Wire Size	0.37mm
F	0.7mm NOM

Specifications	
Voltage AC	250 VAC, 320 VAC (IEC60664-1)
Rated Current	1.3 A
Temperature Range	-40/+130°C
DC Resistance	0.25 Ohms (Per Line)
Inductance Common Mode	3 mH
Inductance Differential Mode	100 uH

Packaging Specifications	
Packaging	Tray
Packaging Quantity	300
Typical Component Weight	10 g

Statements of suitability for certain applications are based on our knowledge of typical operating conditions for such applications, but are not intended to constitute - and we specifically disclaim - any warranty concerning suitability for a specific customer application or use. This Information is intended for use only by customers who have the requisite experience and capability to determine the correct products for their application. Any technical advice inferred from this Information or otherwise provided by us with reference to the use of our products is given gratis, and we assume no obligation or liability for the advice given or results obtained.

© 2006 - 2025 YAGEO