Data sheet



# BTF13-L1EM10PP

## HighLine

**WIRE DRAW ENCODERS**

SICK
Sensor Intelligence.



## Ordering information

| Type | part no. |
|---|---|
| BTF13-L1EM10PP | 1060990 |

**Included in delivery:** ACM60B-S1LE13x06 (1), MRA-F130-110D2 (1)

Other models and accessories ➜ www.sick.com/HighLine

## Detailed technical data

### Safety-related parameters

| | |
|---|---|
| **$MTTF_D$ (mean time to dangerous failure)** | 600 years (EN ISO 13849-1) [1] |

[1] This product is a standard product and does not constitute a safety component as defined in the Machinery Directive. Calculation based on nominal load of components, average ambient temperature 40 °C, frequency of use 8760 h/a. All electronic failures are considered hazardous. For more information, see document no. 8015532.

### Performance

| | |
|---|---|
| **Measurement range** | 0 m ... 10 m |
| **Encoder** | Absolute encoders |
| **Resolution (wire draw + encoder)** | 0.04 mm [1] [2] |
| **Repeatability** | ≤ 1.5 mm [3] |
| **Linearity** | ≤ ± 2 mm [3] |
| **Hysteresis** | ≤ 3 mm [3] |

[1] The values shown have been rounded.

[2] Example calculation based on the BTF08 with PROFINET: 200 mm (wire draw length per revolution - see Mechanical data): 262,144 (number of steps per revolution) = 0.001 mm (resolution of wire draw + encoder combination).

[3] Value applies to wire draw mechanism.

### Interfaces

| | |
|---|---|
| **Communication interface** | Analog / Voltage / 0...10 V |
| **Programmable/configurable** | ✓ |

### Electronics

| | |
|---|---|
| **Connection type** | Male connector, M12, 5-pin, radial |
| **Supply voltage** | 18 V DC ... 33 V DC |
| **Operating current** | ≤ 80 mA (without load) |

## Mechanics

| | |
|---|---|
| **Weight** | 3.9 kg |
| **Measuring wire material** | Highly flexible stranded steel 1,4401 stainless steel V4A |
| **Measuring wire diameter** | 1.35 mm |
| **Weight (measuring wire)** | 7.1 g/m |
| **Housing material, wire draw mechanism** | Aluminum (anodised), plastic |
| **Spring return force** | 10 N ... 20 N [1] |
| **Length of wire pulled out per revolution** | 332.4 mm |
| **Life of wire draw mechanism** | Typ. 1,000,000 cycles [2] [3] |
| **Actual wire draw length** | 10.2 m |
| **Wire acceleration** | 40 m/s² |
| **Operating speed** | 8 m/s |
| **Mounted encoder** | ACM60, ACM60B-S1LE13X06, 6045313 |
| **Mounted mechanic** | MRA-F130-110D2, 6028627 |

[1] These values were measred at an ambient temperature of 25 °C. There may be variations at other temperatures.
[2] Average values, which depend on the application.
[3] The service life depends on the type of load. This is influenced by environmental conditions, the installation location, the measuring range in use, the traversing speed, and acceleration.

## Ambient data

| | |
|---|---|
| **EMC** | According to EN 61000-6-2 and EN 61000-6-4 |
| **Enclosure rating** | IP64, mounted mechanic<br>IP67, Encoder (IEC 60529) [1] |
| **Operating temperature range** | –30 °C ... +70 °C |

[1] With mating connector fitted.

## Certificates

| | |
|---|---|
| **EU declaration of conformity** | ✓ |
| **UK declaration of conformity** | ✓ |
| **ACMA declaration of conformity** | ✓ |
| **Moroccan declaration of conformity** | ✓ |
| **China-RoHS** | ✓ |

## Classifications

| | |
|---|---|
| **ECLASS 5.0** | 27270590 |
| **ECLASS 5.1.4** | 27270590 |
| **ECLASS 6.0** | 27270590 |
| **ECLASS 6.2** | 27270590 |
| **ECLASS 7.0** | 27270590 |
| **ECLASS 8.0** | 27270590 |
| **ECLASS 8.1** | 27270590 |
| **ECLASS 9.0** | 27270590 |
| **ECLASS 10.0** | 27270613 |
| **ECLASS 11.0** | 27270503 |

| | |
|---|---|
| **ECLASS 12.0** | 27270503 |
| **ETIM 5.0** | EC001486 |
| **ETIM 6.0** | EC001486 |
| **ETIM 7.0** | EC001486 |
| **ETIM 8.0** | EC001486 |
| **UNSPSC 16.0901** | 41112113 |

## Dimensional drawing

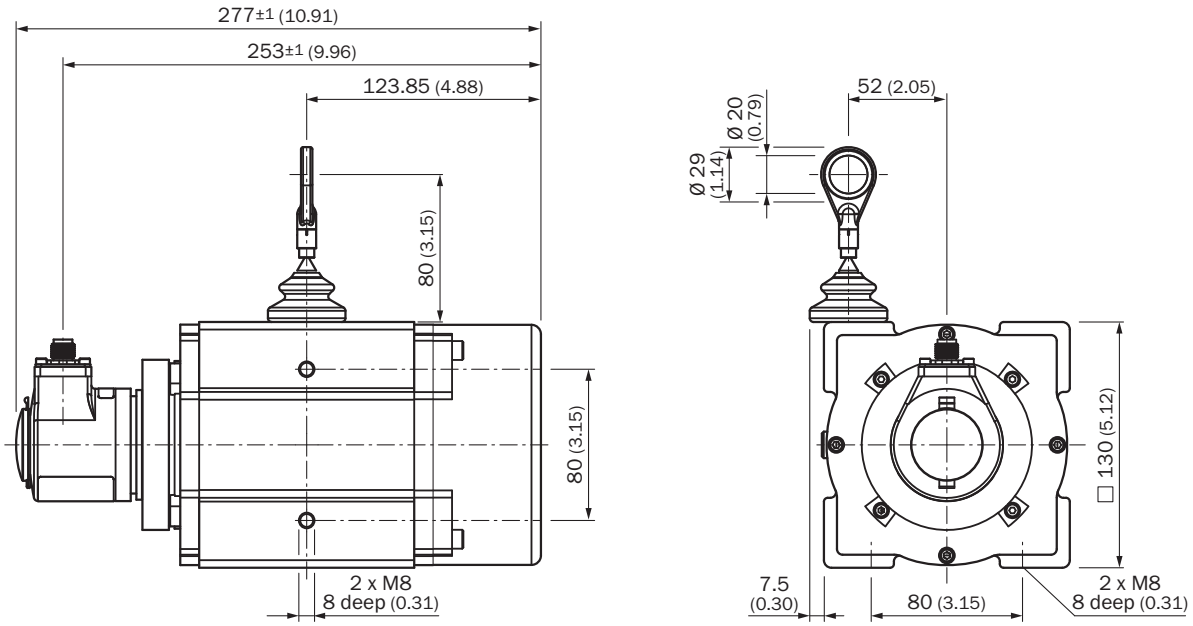


Dimensions in mm (inch)

## PIN assignment

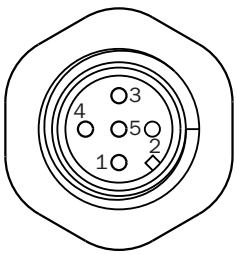


① GND
② + 24 V
③ Output signal GND
④ Output signal 4 ... 20 mA
⑤ N.C.

## Diagrams Voltage output

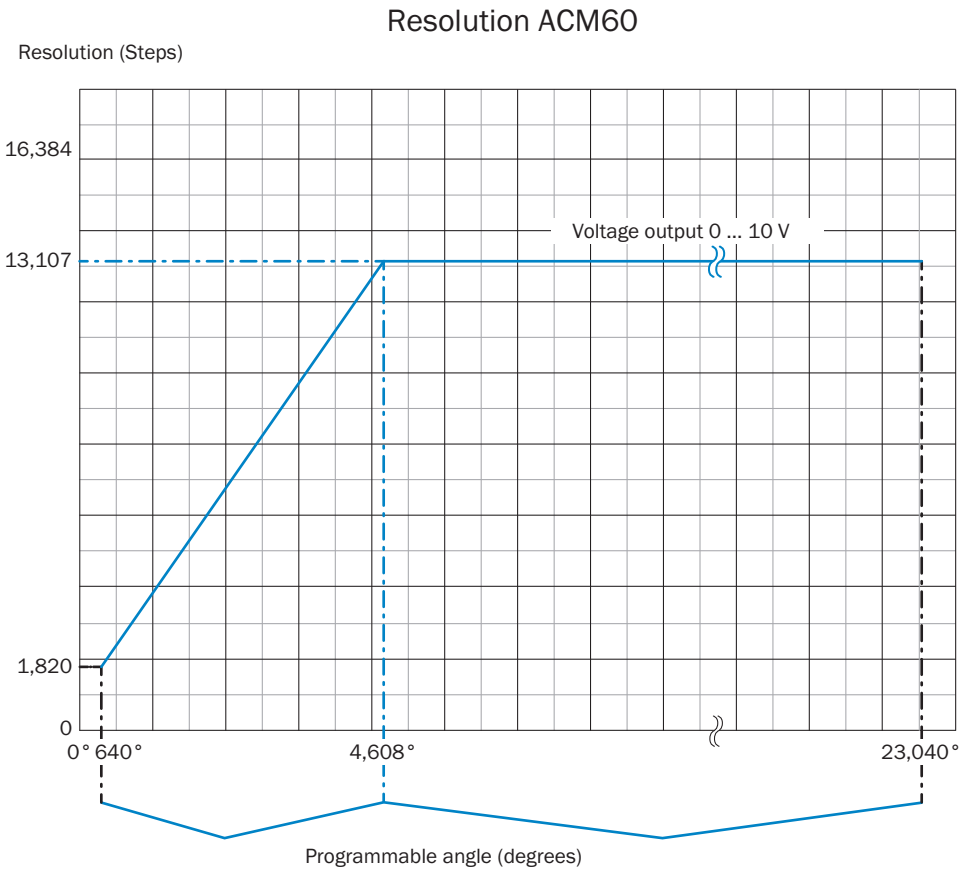


Calculation formula for number of steps in angle range

$$Steps = \frac{Angle \times 1024}{360°}$$

Number of steps in angle range

*Steps (0 ... 10 V) = 13107*

## Recommended accessories

Other models and accessories ➜ www.sick.com/HighLine

| | Brief description | Type | part no. |
|---|---|---|---|
| **Mounting systems** | | | |
|  | • **Description:** Joint ball for later insertion in wire end ring with 20 mm diameter. The use of this joint ball enables movement in multiple levels of freedom. | Joint protection for wire rope BTF/PRF/MRA | 5318683 |
|  | • **Description:** Compressed air attachment for MRA-F080... and MRA-F130... HighLine wire draw mechanism | MRA-F-P | 6073769 |
|  | • **Description:** Flange adapter for HighLine wire draw mechanisms, adaption of face mount flange with centering hub 20 mm to 50 mm servo flange<br>• **Material:** Aluminum<br>• **Details:** Aluminum<br>• **Items supplied:** Including 3 countersunk screws M3 x 10 | BEF-FA-020-050WDE | 2073776 |
|  | • **Description:** Additional brush attachment for wire draw mechanism MRA-F130 (5 m, 10 m, 20 m and 30 m from HighLine series) | MRA-F130-B | 6038562 |
|  | • **Description:** Wire draw deflection pulley for wire draw mechanism MRA-F130 (5m, 10m, 20m and 30m from HighLine series) | MRA-F130-R | 6028631 |
| **Wire draw mechanism** | | | |
|  | • **Product segment:** Wire draw mechanism<br>• **Product family:** Wire draw mechanism for wire draw encoders<br>• **Description:** HighLine wire draw mechanism for servo flange with 6 mm shaft, measuring range 0 m ... 10 m<br>• **Items supplied:** Without encoder | MRA-F130-110D2 | 6028627 |

# SICK AT A GLANCE

SICK is one of the leading manufacturers of intelligent sensors and sensor solutions for industrial applications. A unique range of products and services creates the perfect basis for controlling processes securely and efficiently, protecting individuals from accidents and preventing damage to the environment.

We have extensive experience in a wide range of industries and understand their processes and requirements. With intelligent sensors, we can deliver exactly what our customers need. In application centers in Europe, Asia and North America, system solutions are tested and optimized in accordance with customer specifications. All this makes us a reliable supplier and development partner.

Comprehensive services complete our offering: SICK LifeTime Services provide support throughout the machine life cycle and ensure safety and productivity.

**For us, that is “Sensor Intelligence.”**

# WORLDWIDE PRESENCE:

Contacts and other locations –www.sick.com