CUDEVICES

SERIES: TS10 | DESCRIPTION: TACTILE SWITCH

FEATURES

- blue actuator
- normally closed switch
- surface mount

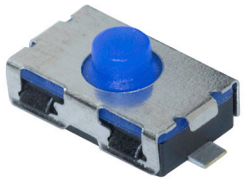

RoHS

SPECIFICATIONS

parameter	conditions/description	min	typ	max	units
rated voltage		1		12	Vdc
rated current		0.01		50	mA
withstanding voltage	for 1 minute		250		Vac
contact resistance	applying load of 2 times operating force at 5 Vdc, 10 mA			100	mΩ
insulation resistance	at 500 Vdc for 1 minute	100			MΩ
operating force	see force table				
actuator travel		0.15	0.25	0.35	mm
operating temperature		-40		85	°C
storage temperature		-40		85	°C
life	at 5 Vdc, 10 mA, 2~3 cycles/second, 375 gf		50,000		cycles
vibration	10~55~10 Hz, 1.5 mm amplitude, 2 hours on each XYZ				
flammability rating	see material table				
RoHS	yes				

PART NUMBER KEY

TS10 - 63 - 26 - BE - 250 - SMT - TR

Base Number

MECHANICAL DRAWING

units: mm
tolerance: ±0.2 mm
unless otherwise noted

ITEM	DESCRIPTION	MATERIAL	PLATING/COLOR
1	base	LCP (UL94V-0)	black
2	terminal	brass	silver
3	contacts	stainless steel	silver
4	cover	stainless steel	
5	stem	silica gel	blue

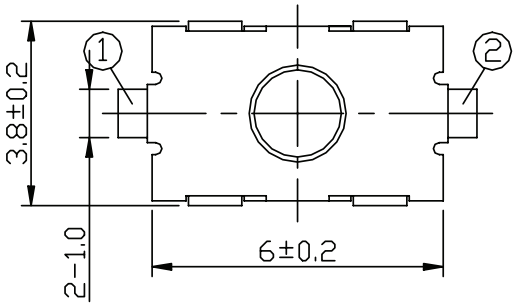

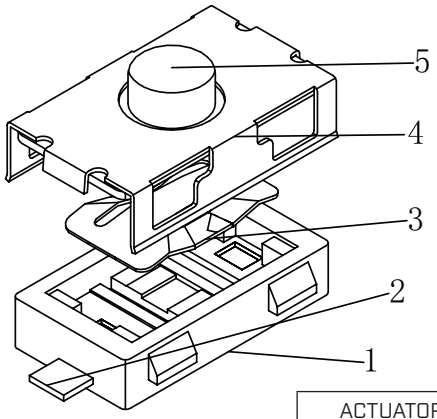

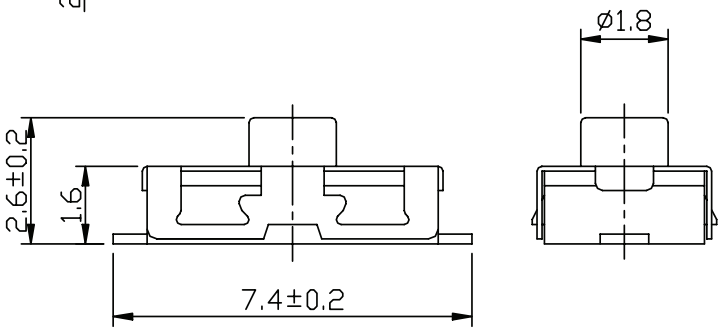

ACTUATOR POSITION [ ]: MOMENTARY	
NORMAL	DOWN
ON	[OFF]
SCHEMATIC	

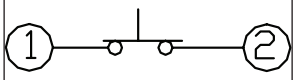

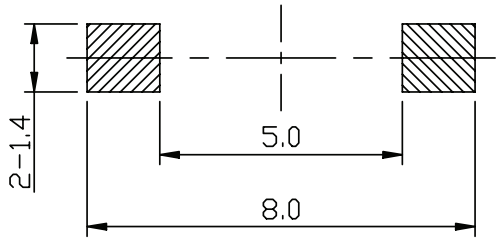

Recommended PCB Layout
Top View

Operating Force Table		
Model	Press Force (N)	Return Force (N)
250	2.5±0.50	>0.40

SOLDERABILITY

parameter	conditions/description	min	typ	max	units
hand soldering	for maximum 3 seconds			350	°C
reflow soldering[1]	see reflow profile			260	°C

Notes: 1. Do not exceed 2 reflow cycles.

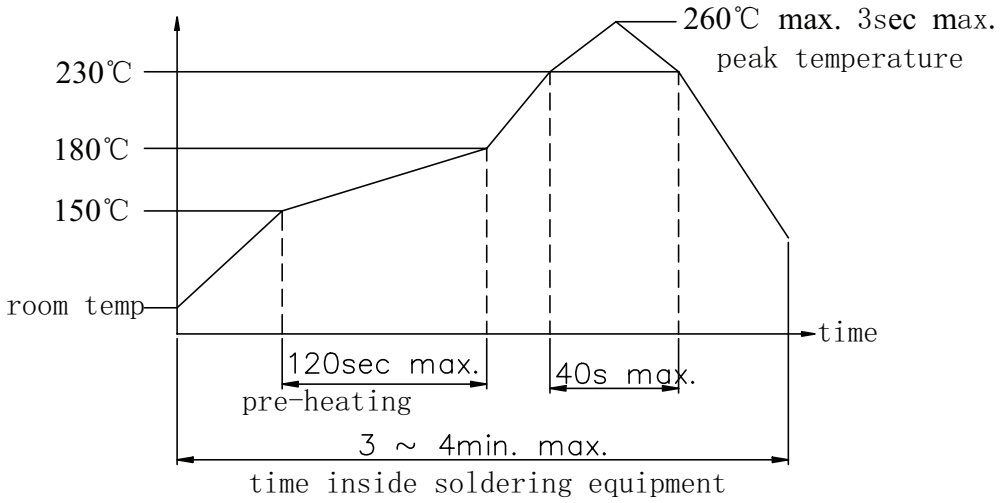

PACKAGING

units: mm

Reel QTY: 3,000 pcs per reel

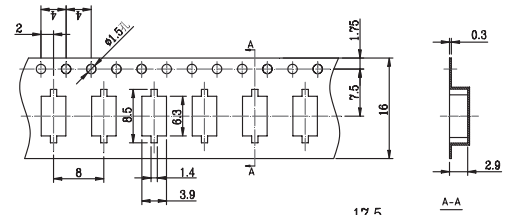

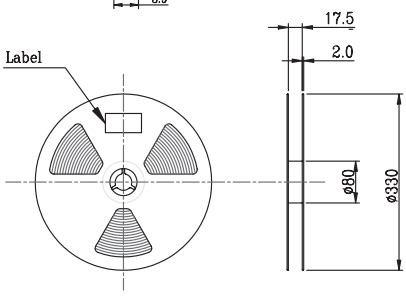

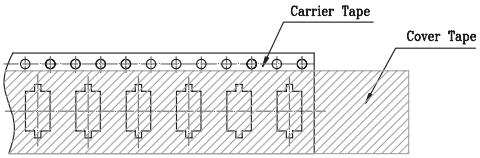

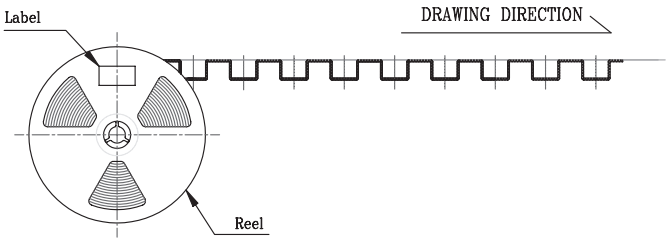

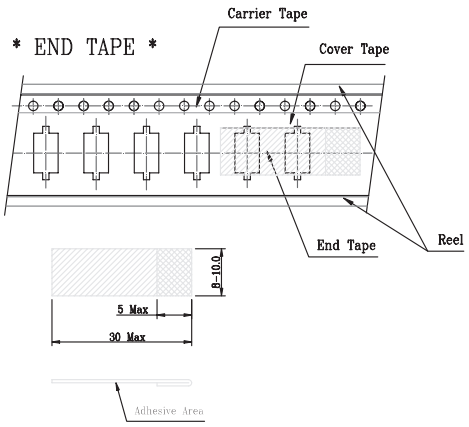

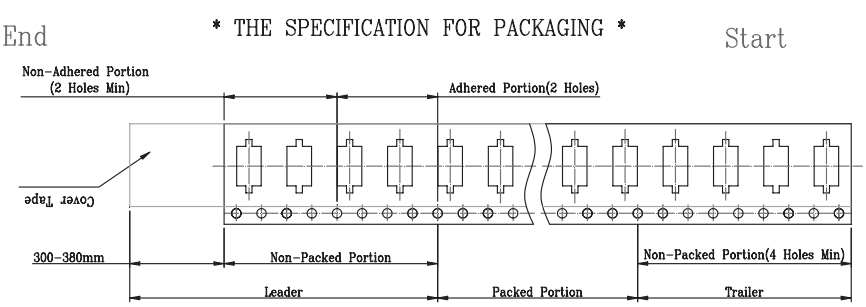

REVISION HISTORY

rev.	description	date
1.0	initial release	11/23/2021
1.01	logo, datasheet style update	08/05/2022

The revision history provided is for informational purposes only and is believed to be accurate.

CUI Devices offers a one (1) year limited warranty. Complete warranty information is listed on our website.

CUI Devices reserves the right to make changes to the product at any time without notice. Information provided by CUI Devices is believed to be accurate and reliable. However, no responsibility is assumed by CUI Devices for its use, nor for any infringements of patents or other rights of third parties which may result from its use.

CUI Devices products are not authorized or warranted for use as critical components in equipment that requires an extremely high level of reliability. A critical component is any component of a life support device or system whose failure to perform can be reasonably expected to cause the failure of the life support device or system, or to affect its safety or effectiveness.

cuidevices.com