TABLE OF CONTENTS	
SHEET NO.	SHEET DESCRIPTION
1	NOTES AND BOM
2	CONFIGURATIONS
3	ADAPTOR DETAIL

BILL OF MATERIALS (BOM)

DESCRIPTION	PART NUMBER	CIRCUIT SIZE	COLOR	RIBS	MATING DRAWING	CONVOLUTE SIZE	STATUS
1X3 C.S., WITH RIB	204351-0304	1X3 C.S.	BLACK	YES	2043510301 PSD	AD 10 SOFANOU VARIANT 1	SALEABLE
2X4, WITH RIB	34951-0831	2X4	BLACK	YES	SD-34951-0001 SD-34950-0001	NW 12 SCHLEMMER	SALEABLE
2X4, WITHOUT RIB	34951-0841	2X4	BLACK	NO	SD-34951-0001 SD-34950-0001	NW 12 SCHLEMMER	SALEABLE
2X8/2X10, WITH RIB	34951-1631	2X8/2X10	BLACK	YES	SD-34951-0001 SD-34950-0001	NW 16 SCHLEMMER	SALEABLE
2X8/2X10, WITHOUT RIB	34951-1641	2X8/2X10	BLACK	NO	SD-34951-0001 SD-34950-0001	NW 16 SCHLEMMER	SALEABLE

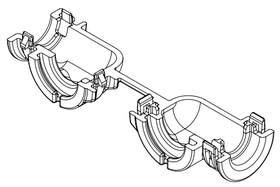

1X3 C.S.

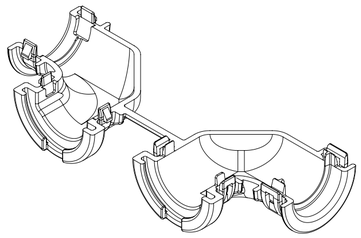

2X4

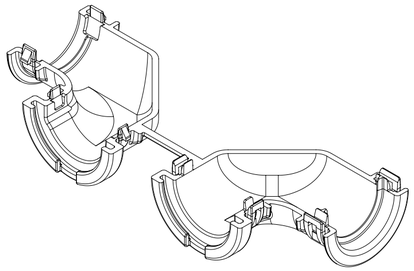

2X8/2X10

ADAPTOR NOTES: VALID UNLESS OTHERWISE SPECIFIED

1. GENERAL:
a. APPLICATION SPECIFICATION SEE: 1600730001-AS REV C
-DESIGNED TO MATE WITH BACKSHELL AS SPECIFIED IN THE BOM
-COMPONENTS ARE OPTIONAL AND MUST BE PURCHASED SEPERATELY. SEE GM DRAWING 13109960 REV 006 FOR CONDUIT SPECIFICATIONS
b. PRODUCT SPECIFICATION: TBD
c. PACKAGING SPECIFICATION SEE: TBD
d. PARTS MUST BE IN COMPLIANCE TO MOLEX CHEMICAL SUBSTANCES FOR PRODUCTS AND PACKAGING SPECIFICATION: QEHS-699000-300
e. DATA MUST BE SUBMITTED UNDER THE MOLEX PART NUMBER TO IMDS (COMPANY ID#13255)
f. FOLLOWING PRODUCTION CODES TO BE PRESENT
-DATE CODE
-MOLD CAVITY CODE
-MOLEX LOGO
-RECYCLE CODE

2. DESIGN - MATERIALS:
a. PA66 0% GLASS FILLED
b. BLACK

3. DESIGN GEOMETRY:
a. THIS IS A 100% CAD GENERATED PART. THE CAD MATHEMATICAL DATA IS THE MASTER FOR THIS PART. FOR DIMENSIONAL OR ANY INFORMATION NOT SHOWN ON THIS DRAWING, ANALYZE THE CAD MODEL.
b. GEOMETRIC DIMENSIONS AND TOLERANCES PER ASME Y14.5M - 2009.
c. CORNERS SHOWN AS SHARP TO BE R 0.1.
d. VISUAL DEFECTS SHALL MEET COSMETIC STANDARD PS-45499-002 (CLASS B).
e. VISUAL DEFECTS SHALL MEET COSMETIC STANDARD PS-45499-002 (CLASS C) FOR SPECIFIED AREAS ON THE ADAPTOR.
f. ALLOWABLE FLASH, PARTING LINES MISMATCH, EJECTOR PINS MARK, AND GATE VESTIGE TO BE +0.30 MAX PROTUSION.

INSPECTION NUMBER LOG
LAST NUMBER: 53 ADDED: 41,51,43,53,45,48,27,28,14,25, 17,19,15,27 REMOVED: 1,2,3,4,5,43,53

REV	DESCRIPTION
A10	CHANGED TOLERANCE ON DIM C FROM 0.12 TO 0.10 TO MATCH PDD
A9	CHANGED PARTS STATUS TO SALEABLE
A8	UPDATED RIB FEATURES AND CONTROLS
A7	UPDATE TOLERANCES FOR MANUFACTURING
A6	UPDATE TOLERANCES FOR MANUFACTURING
A5	UPDATE REV DESCRIPTION TABLE
A4	UPDATE NOTE 1.a FOR CONDUIT DEFINITION
A3	RELEASE P/N 204351-0304 FOR SALEABLE
A2	UPDATED CHARTS AND BALLOON NUMBERS
A1	MODIFIED SETTING IN PLM
A	DRAWING RELEASE

THIS DRAWING CONTAINS INFORMATION THAT IS PROPRIETARY TO MOLEX ELECTRONIC TECHNOLOGIES, LLC AND SHOULD NOT BE USED WITHOUT WRITTEN PERMISSION

EC NO: 632862
DRWN: PPALLAN 2020/02/25
CHK'D: MVANSLAMBROU 2020/02/26
APPR: MVANSLAMBROU 2020/02/26
REV: A10

GENERAL TOLERANCES (UNLESS SPECIFIED)

ANGULAR TOL ±	°	
4 PLACES	±	
3 PLACES	±	
2 PLACES	±	0.1
1 PLACE	±	0.2
0 PLACES	±	

DRAFT WHERE APPLICABLE MUST REMAIN WITHIN DIMENSIONS

DIMENSION UNITS: mm
SCALE: 1:1
DRWN BY: DDEB DATE: 2017/12/08
CHK'D BY: DATE:
APPR BY: MVANSLAMBROU DATE: 2017/12/20
DRAWING SIZE: A2
THIRD ANGLE PROJECTION

molex®

MX150 90° ADAPTOR

PRODUCT CUSTOMER DRAWING

SERIES	MATERIAL NUMBER	CUSTOMER
34951		

DOCUMENT NUMBER	DOC TYPE	DOC PART	SHEET NUMBER
349510001	PSD	000	1 OF 4

RELEASE STATUS	P1	RELEASE DATE	2020/02/26 00:51:12

FORMAT: master-tb-prod-A2
REVISION: G
DATE: 2017/02/06

SHEET DESCRIPTION
CONFIGURATIONS

WITH RIB	WITHOUT RIB
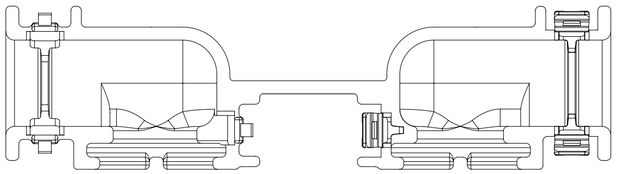 1X3 C.S.	
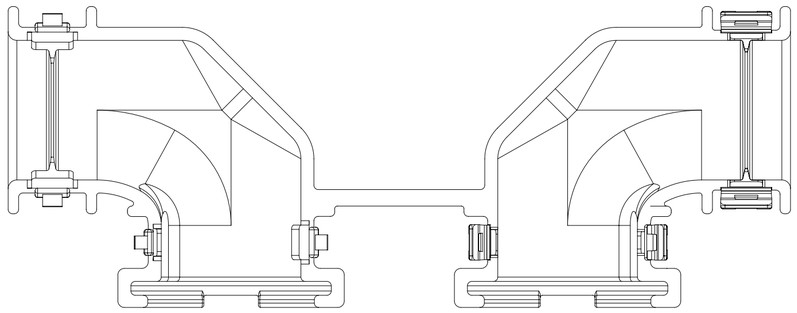 2X4	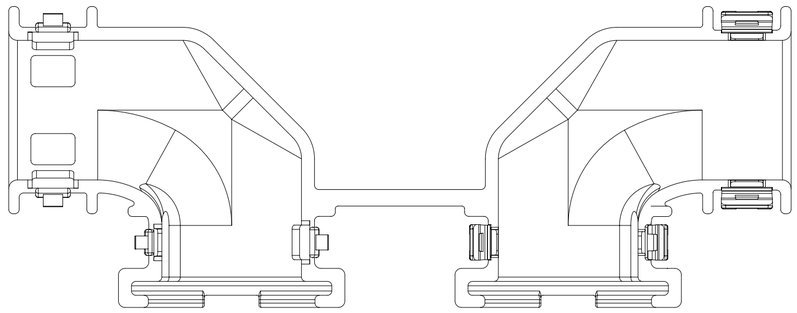 2X4
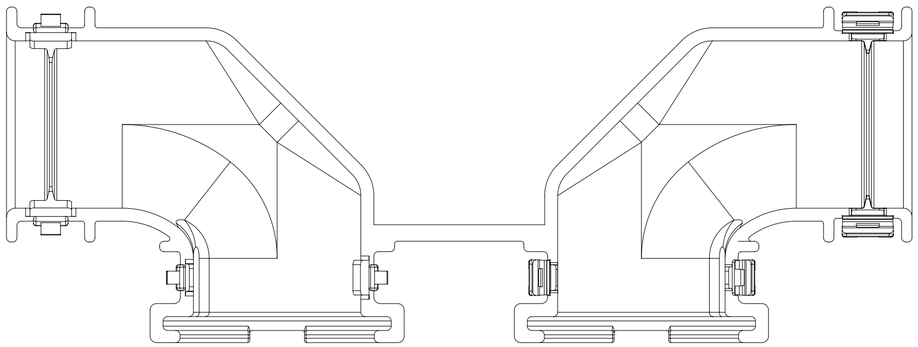 2X8 / 2X10	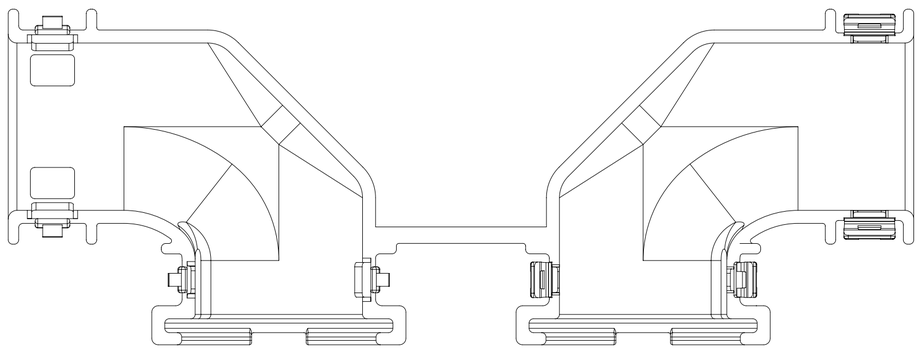 2X8 / 2X10

THIS DRAWING CONTAINS INFORMATION THAT IS PROPRIETARY TO MOLEX ELECTRONIC TECHNOLOGIES, LLC AND SHOULD NOT BE USED WITHOUT WRITTEN PERMISSION

EC NO: 632862 2020/02/25
DRWN: PPALLAN 2020/02/26
CHK'D: MVANSLAMBROU 2020/02/26
APPR: MVANSLAMBROU

GENERAL TOLERANCES (UNLESS SPECIFIED)

ANGULAR TOL ±	°
4 PLACES	±
3 PLACES	±
2 PLACES	± 0.1
1 PLACE	± 0.2
0 PLACES	±

DRAFT WHERE APPLICABLE MUST REMAIN WITHIN DIMENSIONS

A10 REV:

DIMENSION UNITS: mm
SCALE: 2:1
DRWN BY: DDEB DATE: 2017/12/08
CHK'D BY: DATE:
APPR BY: MVANSLAMBROU DATE: 2017/12/20
DRAWING SIZE: A2
THIRD ANGLE PROJECTION

molex®

MX150 90° ADAPTOR

PRODUCT CUSTOMER DRAWING

SERIES	MATERIAL NUMBER	CUSTOMER
34951		

DOCUMENT NUMBER	DOC TYPE	DOC PART	SHEET NUMBER
349510001	PSD	000	2 OF 4

RELEASE STATUS	P1	RELEASE DATE	2020/02/26 00:51:12

FORMAT: master-tb-prod-a2
REVISION: G
DATE: 2017/02/06

SHEET DESCRIPTION
DUAL ROW ADAPTOR DETAIL

CHARTED DIMENSION					
DESCRIPTION	DIMENSIONS				
	P	R	C	D	E
2X4 WITH RIB	1.35	16.10	0.80	N/A	N/A
2X4 W/O RIB	N/A	16.10	N/A	3.60	5.10
2X8/2X10 WITH RIB	1.45	19.30	0.80	N/A	N/A
2X8/2X10 W/O RIB	N/A	19.30	N/A	3.60	5.10

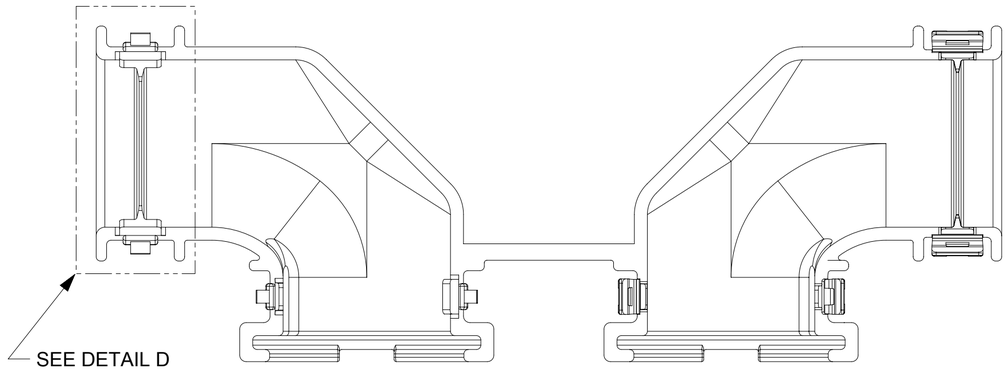

WITH RIB

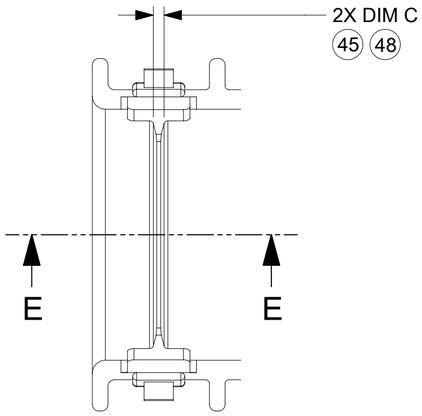

DETAIL D
SCALE 3:1

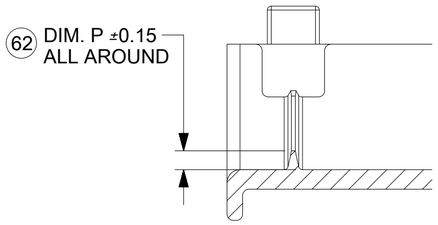

SECTION E-E

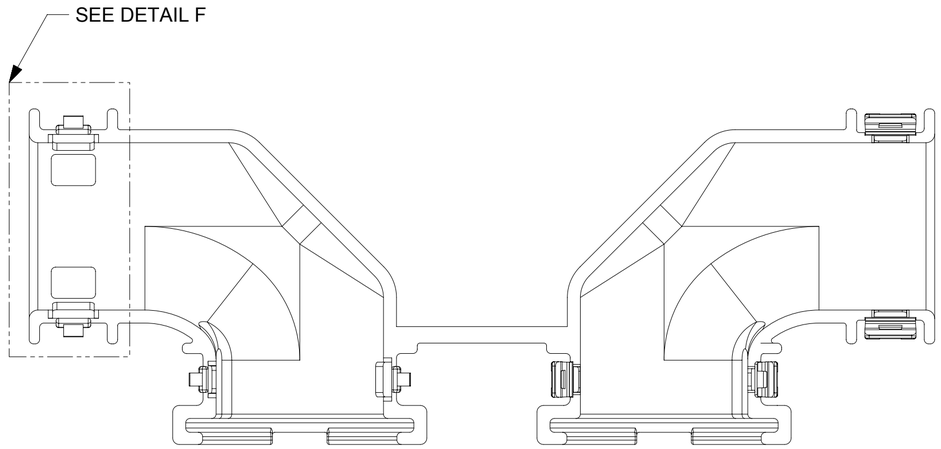

WITHOUT RIB

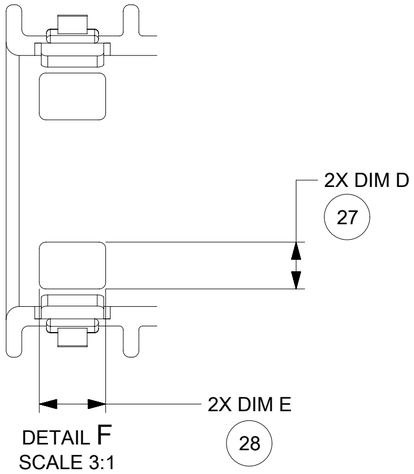

DETAIL F
SCALE 3:1

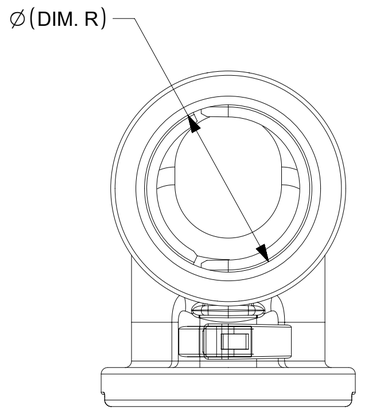

FOR WITH RIB AND WITHOUT RIB

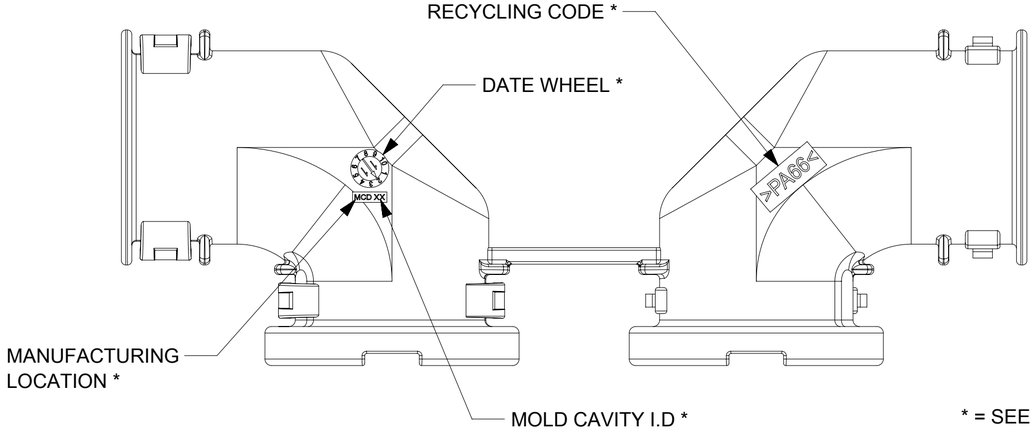

DUAL ROW

* = SEE ADAPTOR NOTES - 3.e.

THIS DRAWING CONTAINS INFORMATION THAT IS PROPRIETARY TO MOLEX ELECTRONIC TECHNOLOGIES, LLC AND SHOULD NOT BE USED WITHOUT WRITTEN PERMISSION

EC NO: 632862	DRWN: PPALLAN	CHK'D: MVANSLAMBROU	APPR: MVANSLAMBROU
2020/02/25	2020/02/26	2020/02/26	

GENERAL TOLERANCES (UNLESS SPECIFIED)

ANGULAR TOL ±		°
4 PLACES	±	
3 PLACES	±	
2 PLACES	±	0.1
1 PLACE	±	0.2
0 PLACES	±	

DRAFT WHERE APPLICABLE MUST REMAIN WITHIN DIMENSIONS

DIMENSION UNITS: mm	SCALE: 2:1		
DRWN BY: DDEB	DATE: 2017/12/08		
CHK'D BY	DATE		
APPR BY: MVANSLAMBROU	DATE: 2017/12/20		
DRAWING SIZE: A2	THIRD ANGLE PROJECTION		

molex®

MX150 90° ADAPTOR

PRODUCT CUSTOMER DRAWING

SERIES	MATERIAL NUMBER	CUSTOMER
34951		

DOCUMENT NUMBER	DOC TYPE	DOC PART	SHEET NUMBER
349510001	PSD	000	3 OF 4

A10 REV

RELEASE STATUS	P1	RELEASE DATE	2020/02/26 00:51:12

FORMAT: master-tb-prod-A2
REVISION: G
DATE: 2017/02/06

SHEET DESCRIPTION
SINGLE ROW ADAPTOR DETAIL

CHARTED DIMENSION			
DESCRIPTION	DIMENSIONS		
	A	B	C
1X3 C.S. WITH RIB	7.1	9.95	0.75

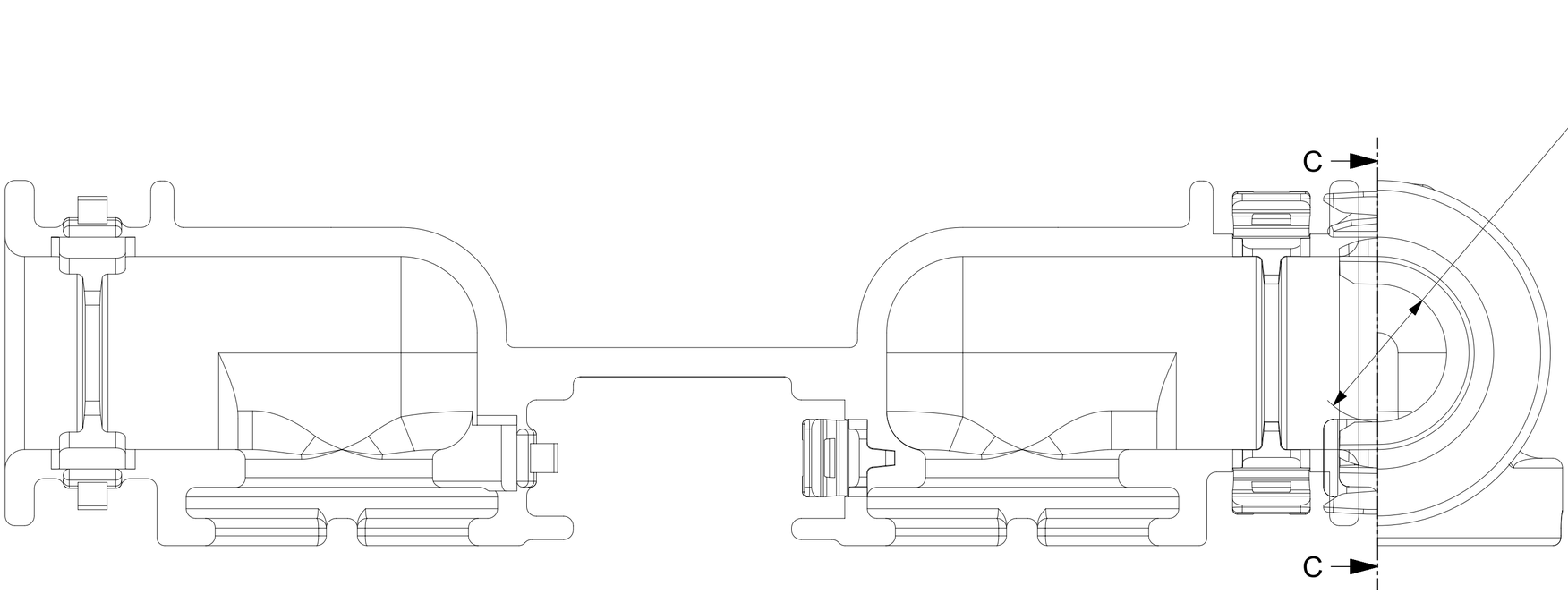

1X3 C.S.

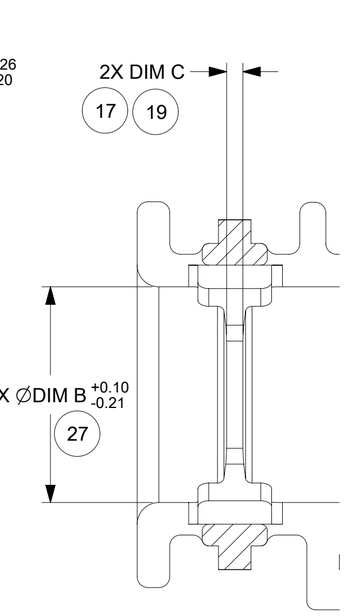

PARTIAL SECTION C-C

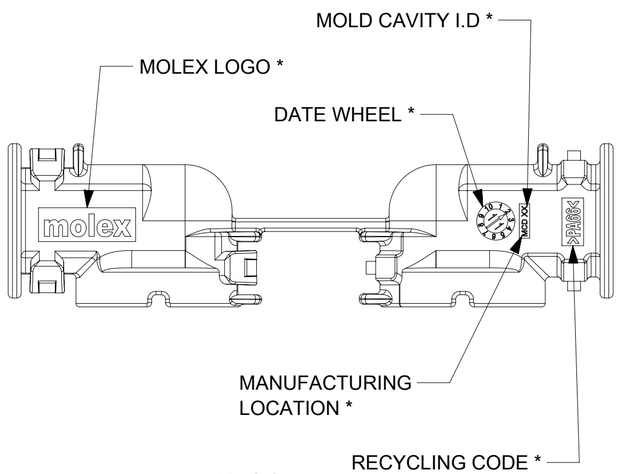

1X3 C.S.

* = SEE ADAPTOR NOTES - 3.e.

THIS DRAWING CONTAINS INFORMATION THAT IS PROPRIETARY TO MOLEX ELECTRONIC TECHNOLOGIES, LLC AND SHOULD NOT BE USED WITHOUT WRITTEN PERMISSION

DIMENSION UNITS	mm
SCALE	5:1
GENERAL TOLERANCES (UNLESS SPECIFIED)	
ANGULAR TOL ±	°
4 PLACES ±	
3 PLACES ±	
2 PLACES ±	0.1
1 PLACE ±	0.2
0 PLACES ±	
TOOL NUMBER	

Material:
Heat treat:
Finish:
CURRENT REV DESC:

EC NO:	632862	
DRWN:	PPALLAN	2020/02/25
CHK'D:	MVANSLAMBROU	2020/02/26
APPR:	MVANSLAMBROU	2020/02/26

ORIG DRWN BY: DDEB 2017/12/08

THIRD ANGLE PROJECTION | DRAWING: A2-SIZE | SERIES: 34951

molex

MX150 90° ADAPTOR

PRODUCT CUSTOMER DRAWING

DOCUMENT NUMBER	DOC TYPE	DOC PART	REVISION
349510001	PSD	000	A10

MATERIAL NUMBER	CUSTOMER	SHEET NUMBER
		4 OF 4

DOCUMENT STATUS	P1	RELEASE DATE	2020/02/26 00:51:12

FORMAT: master-tb-tool-A2
REVISION: H
DATE: 2018/01/18

TABLE OF CONTENTS

SHEET NO.	SHEET DESCRIPTION
1	NOTES AND BOM
2	CONFIGURATIONS
3-4	KEY CONFIGURATIONS
5	RECEPTACLE CONNECTOR ASSEMBLY
6	2X10 CONNECTOR INTERFACE DEFINITION

NOTES: VALID UNLESS OTHERWISE SPECIFIED

1. GENERAL:
a. APPLICATION SPECIFICATION SEE: AS-33472-100
-CONTAINS: PRODUCT INTRODUCTION, PRODUCT SUMMARY, CONNECTOR ASSEMBLY, PACKAGING INFORMATION, CONNECTOR MATING, SERVICE INSTRUCTIONS, ELECTRICAL CONTINUITY CHECKING, CRIMPING, AND TROUBLESHOOTING.
-DESIGNED TO MATE WITH DEVICE OR CONNECTOR AS SPECIFIED IN THE MATING INTERFACE/CONNECTOR DRAWINGS CHART.
*DENOTES DRAWINGS THAT CAN BE ACCESSED AT <http://ewcap.uscarteams.org/>.
-ASSEMBLY SHIPPED WITH PLR IN PRE-LOCK POSITION (SEE PLR PRE-LOCK VIEW SHEET 5).

b. PRODUCT SPECIFICATION SEE: PS-160008-0001
CONTAINS: SCOPE, PRODUCT DESCRIPTION, INTEGRAL COMPONENTS AND ACCESSORIES, APPLICABLE DOCUMENTS AND SPECIFICATIONS, RATINGS, PERFORMANCE, PACKAGING, GUAGES AND FIXTURES, AND OTHER INFORMATION.
c. PACKAGING SPECIFICATION PER MOLEX DRAWING: SEE PACKAGING CHART.
d. PARTS MUST BE IN COMPLIANCE TO MOLEX CHEMICAL SUBSTANCES FOR PRODUCTS AND PACKAGING SPECIFICATION: QEHS-699000-300
e. DATA MUST BE SUBMITTED UNDER THE MOLEX PART NUMBER TO IMDS (COMPANY ID#13255)

2. DESIGN - MATERIALS:
a. SEE BOM TABLE IN SD-160008-0002

3. DESIGN - GEOMETRY:
a. THE 3-D CAD DATA IS BASIC (WITHOUT TOLERANCE) AND MASTER FOR THIS PART WITH THE EXCEPTION OF UNDERLINED DIMENSIONS. DIMENSIONAL INFORMATION NOT SHOWN ON THIS DRAWING IS DEFINED BY THE DATA FILE AT ITS LATEST REVISION.
b. GEOMETRIC DIMENSIONS AND TOLERANCES PER ASME Y14.5M-2009
c. EDGES AND UNDIMENSIONED DETAILS PER ISO13715
d. CORNERS SHOWN AS SHARP TO BE R 0.2 MAX.
e. LETTERING SHALL BE 0.15 MAX RAISED IN 0.25 MAX RECESS PAD. THIS INCLUDES RECYCLING CODE, CAVITY ID, VENDOR IDENTIFICATION, AND CUSTOMER MATERIAL NUMBER.
f. VISUAL DEFECTS SHALL MEET COSMETIC STANDARD PS-45499-002 (Class B).
g. LASER MARKING:
1. PART NUMBER
2. DAY OF THE YEAR
3. SHIFT
4. YEAR
FOR ADDITIONAL INFORMATION SEE SECTION 5 UNDER PROCEDURES IN ES-34735-008.

PACKAGING	
DESCRIPTION	DRAWING NO.
2X2	TBD
2X3	TBD
2X4	PK-33472-001
2X6	PK-31300-903
2X8	TBD
2X10	PK-31300-903

MATING CONNECTOR DRAWINGS		
DESCRIPTION	INTERFACE DEFINITION	MOLEX INLINE
2X2	*150-S-004-2-Z02	TBD
2X3	*150-S-006-2-Z02	TBD
2X4	*150-S-008-2-Z02	SD-160011-0001
2X6	*150-S-012-2-Z01	SD-160011-0001
2X8	*150-S-016-2-Z01	TBD
2X10	E-160008-0001	SD-160011-0001

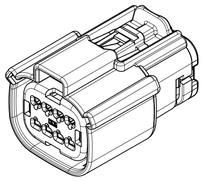

2X4

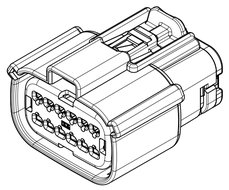

2X6

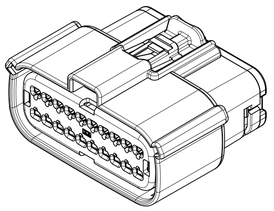

2X10

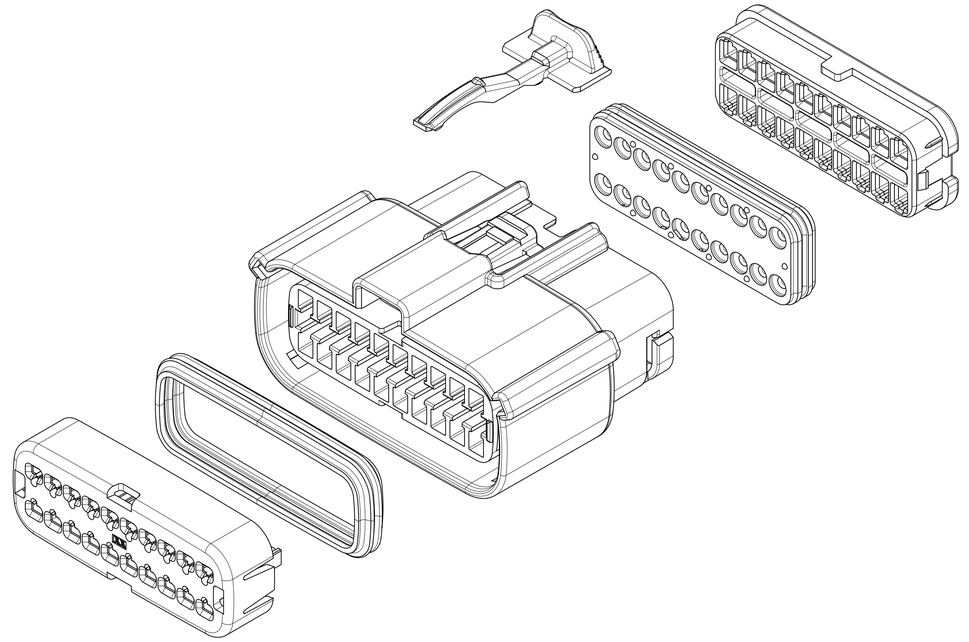

INSPECTION NUMBER LOG
LAST NUMBER:
ADDED:
REMOVED:

REV	REV DESCRIPTION
A5	ADDED MOLEX BACKSHELL DETAILS
A4	UPDATED INTERFACE SHEET
A3	ADDED SHEET 6 & UPDATED PASS THRU
A2	UPDATED NOTES
A1	UPDATED DIM 4
A	INITIAL RELEASE

SYMBOLS
A = 0
C = 0
D = 0
S = 0
= 0
C = 0
= 0
= 0
= 0

THIS DRAWING CONTAINS INFORMATION THAT IS PROPRIETARY TO MOLEX ELECTRONIC TECHNOLOGIES, LLC AND SHOULD NOT BE USED WITHOUT WRITTEN PERMISSION

DIMENSION UNITS	SCALE
mm	1.5:1

GENERAL TOLERANCES (UNLESS SPECIFIED)

ANGULAR TOL	± 3.0 °
4 PLACES	±
3 PLACES	±
2 PLACES	± 0.1
1 PLACE	± 0.2
0 PLACES	±

DRAFT WHERE APPLICABLE MUST REMAIN WITHIN DIMENSIONS

CURRENT REV DESC:

EC NO: 173183
DRWN: DDEB 2018/02/23
CHK'D: MVANSLAMBROU 2018/03/07
APPR: MVANSLAMBROU 2018/03/07

INITIAL REVISION:
DRWN: KBORUSZEWSKI 2014/02/19
APPR: VKOSHY 2014/03/05

THIRD ANGLE PROJECTION | DRAWING: A1-SIZE | SERIES: 160008

molex

MX150 GEN 2 RECEPTACLE
DUAL ROW SEALED ASSEMBLY MAT SEAL

PRODUCT CUSTOMER DRAWING

DOCUMENT NUMBER	DOC TYPE	DOC PART	REVISION
SD-160008-0001	PSD	001	A6

MATERIAL NUMBER	CUSTOMER	SHEET NUMBER
	GENERAL MARKET	1 OF 11

DOCUMENT STATUS	P1	RELEASE DATE	2018/03/07 14:06:48

FORMAT: master-fit-print A1
CREATED BY:
DATE: 2018/07/16

SHEET DESCRIPTION
CONFIGURATIONS

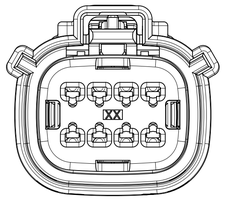

2X4
STANDARD

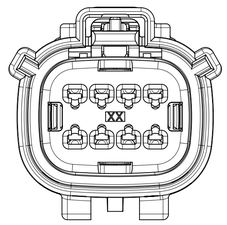

2X4
WITH CLIPSLOT *

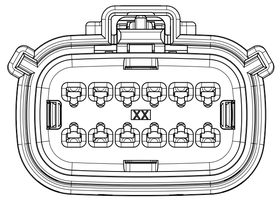

2X6
STANDARD

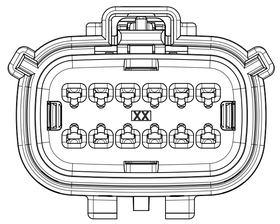

2X6
WITH CLIPSLOT *

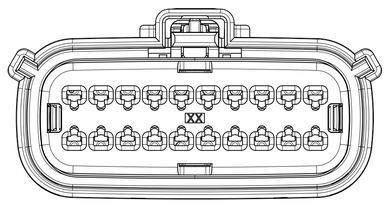

2X10
STANDARD

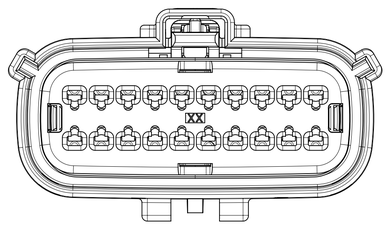

2X10
WITH CLIPSLOT *

* WITH CLIPSLOT CONFIGURATION DOES NOT
MEET THE USCAR PACKAGING FRAME REQUIREMENTS.

DOCUMENT STATUS	P1	RELEASE DATE	2018/03/07	14:06:48

THIS DRAWING CONTAINS INFORMATION THAT IS PROPRIETARY TO MOLEX ELECTRONIC TECHNOLOGIES, LLC AND SHOULD NOT BE USED WITHOUT WRITTEN PERMISSION

SYMBOLS	
A = 0	
B = 0	
C = 0	
D = 0	
E = 0	
F = 0	
G = 0	
H = 0	

DIMENSION UNITS	SCALE
mm	1:1

GENERAL TOLERANCES (UNLESS SPECIFIED)		
ANGULAR TOL	±	3.0 °
4 PLACES	±	
3 PLACES	±	
2 PLACES	±	0.1
1 PLACE	±	0.2
0 PLACES	±	

DRAFT WHERE APPLICABLE MUST REMAIN WITHIN DIMENSIONS

CURRENT REV DESC:

EC NO: 173183

DRWN:	DDEB	2018/02/23
CHK'D:	MVANSLAMBROU	2018/03/07
APPR:	MVANSLAMBROU	2018/03/07

INITIAL REVISION:

DRWN:	KBORUSZEWSKI	2014/02/19
APPR:	VKOSHY	2014/03/05

THIRD ANGLE PROJECTION

DRAWING	SERIES
A1-SIZE	160008

molex

MX150 GEN 2 RECEPTACLE
DUAL ROW SEALED ASSEMBLY MAT SEAL

PRODUCT CUSTOMER DRAWING

DOCUMENT NUMBER	DOC TYPE	DOC PART	REVISION
SD-160008-0001	PSD	001	A6

MATERIAL NUMBER	CUSTOMER	SHEET NUMBER
	GENERAL MARKET	2 OF 11

SHEET DESCRIPTION
KEY CONFIGURATIONS

2X4

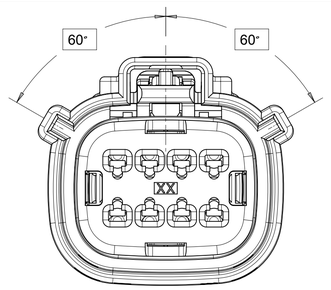

KEY A

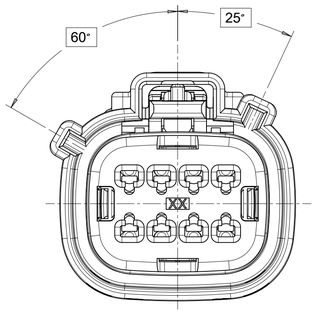

KEY B

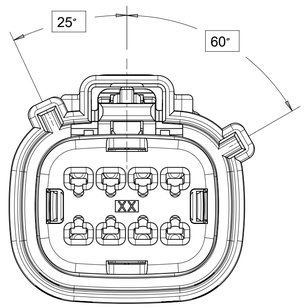

KEY C

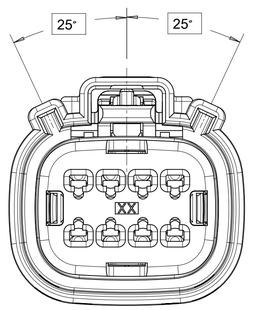

KEY D

SYMBOLS
A = 0
C = 0
E = 0
S = 0
= 0
C = 0
= 0
= 0
= 0

DIMENSION UNITS	SCALE
mm	1:1

GENERAL TOLERANCES (UNLESS SPECIFIED)		
ANGULAR TOL	±	3.0 °
4 PLACES	±	
3 PLACES	±	
2 PLACES	±	0.1
1 PLACE	±	0.2
0 PLACES	±	

DRAFT WHERE APPLICABLE MUST REMAIN WITHIN DIMENSIONS

THIS DRAWING CONTAINS INFORMATION THAT IS PROPRIETARY TO MOLEX ELECTRONIC TECHNOLOGIES, LLC AND SHOULD NOT BE USED WITHOUT WRITTEN PERMISSION

CURRENT REV DESC:

EC NO: 173183

DRWN:	DDEB	2018/02/23
CHK'D:	MVANSLAMBROU	2018/03/07
APPR:	MVANSLAMBROU	2018/03/07

INITIAL REVISION:

DRWN:	KBORUSZEWSKI	2014/02/19
APPR:	VKOSHY	2014/03/05

THIRD ANGLE PROJECTION

DRAWING	SERIES
A1-SIZE	160008

molex

MX150 GEN 2 RECEPTACLE
DUAL ROW SEALED ASSEMBLY MAT SEAL

PRODUCT CUSTOMER DRAWING

DOCUMENT NUMBER	DOC TYPE	DOC PART	REVISION
SD-160008-0001	PSD	001	A6

MATERIAL NUMBER	CUSTOMER	SHEET NUMBER
	GENERAL MARKET	3 OF 11

DOCUMENT STATUS	P1	RELEASE DATE	2018/03/07 14:06:48

SHEET DESCRIPTION
KEY CONFIGURATIONS CONT.

2X6

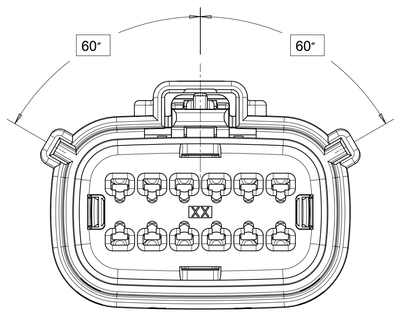

KEY A

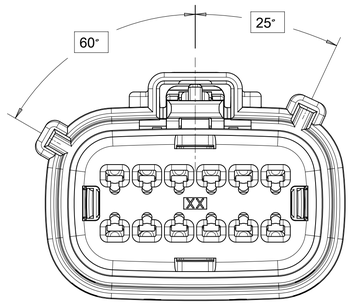

KEY B

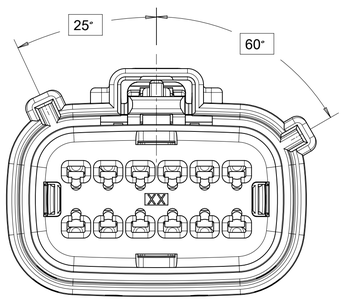

KEY C

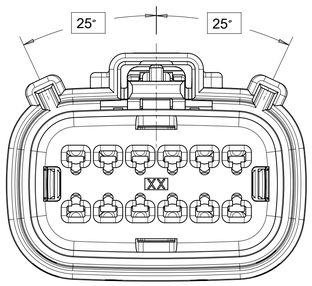

KEY D

2X10

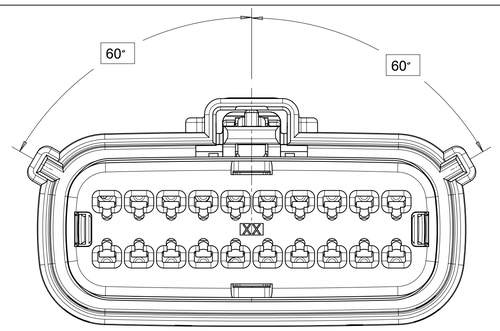

KEY A

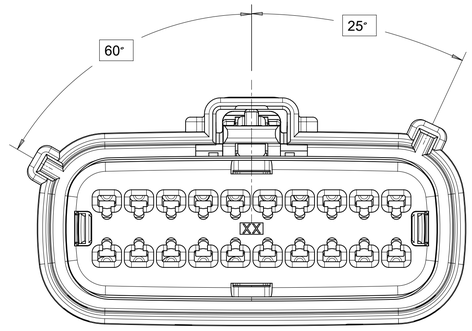

KEY B

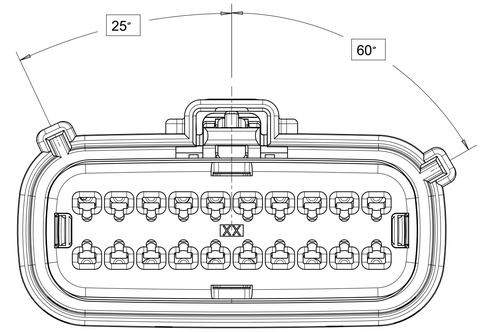

KEY C

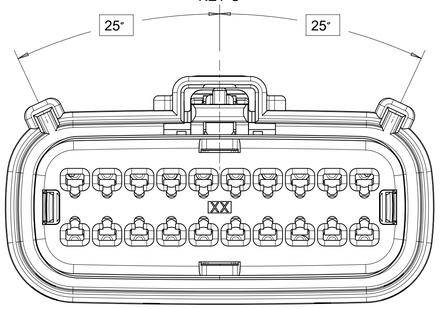

KEY D

SYMBOLS	
F/A	= 0
E/C	= 0
E/F	= 0
S	= 0
▼	= 0
C	= 0
☒	= 0
■	= 0
V	= 0

THIS DRAWING CONTAINS INFORMATION THAT IS PROPRIETARY TO MOLEX ELECTRONIC TECHNOLOGIES, LLC AND SHOULD NOT BE USED WITHOUT WRITTEN PERMISSION

DIMENSION UNITS	SCALE
mm	1:1

GENERAL TOLERANCES (UNLESS SPECIFIED)

ANGULAR TOL	±	3.0 °
4 PLACES	±	
3 PLACES	±	
2 PLACES	±	0.1
1 PLACE	±	0.2
0 PLACES	±	

DRAFT WHERE APPLICABLE MUST REMAIN WITHIN DIMENSIONS

CURRENT REV DESC:

EC NO: 173183
DRWN: DDEB 2018/02/23
CHK'D: MVANSLAMBROU 2018/03/07
APPR: MVANSLAMBROU 2018/03/07

INITIAL REVISION:
DRWN: KBORUSZEWSKI 2014/02/19
APPR: VKOSHY 2014/03/05

THIRD ANGLE PROJECTION | DRAWING: A1-SIZE | SERIES: 160008

molex

MX150 GEN 2 RECEPTACLE
DUAL ROW SEALED ASSEMBLY MAT SEAL

PRODUCT CUSTOMER DRAWING

DOCUMENT NUMBER	DOC TYPE	DOC PART	REVISION
SD-160008-0001	PSD	001	A6

MATERIAL NUMBER	CUSTOMER	SHEET NUMBER
	GENERAL MARKET	4 OF 11

DOCUMENT STATUS	P1	RELEASE DATE	2018/03/07 14:06:48

FORMAT: master-tp-prod-A1-
DEFINITION: P
DATE: 2018/01/19

SHEET DESCRIPTION
RECEPTACLE CONNECTOR ASSEMBLY

CHARTED DIMENSION				
DESCRIPTION	DIMENSIONS			
	A	B	C	D
2X2 STANDARD	TBD	TBD	TBD	TBD
2X2 W/ CLIPSLOT	TBD	TBD	TBD	TBD
2X3 STANDARD	TBD	TBD	TBD	TBD
2X3 W/ CLIPSLOT	TBD	TBD	TBD	TBD
2X4 STANDARD	14.24	1.75	29.9	10.92
2X4 W/ CLIPSLOT	14.24	1.75	31.1	13.81
2X6 STANDARD	TBD	TBD	36.3	TBD
2X6 W/ CLIPSLOT	TBD	TBD	36.3	TBD
2X8 STANDARD	TBD	TBD	TBD	TBD
2X8 W/ CLIPSLOT	TBD	TBD	TBD	TBD
2X10 STANDARD	24.75	1.75	49.8	10.92
2X10 W/ CLIPSLOT	24.75	1.75	49.8	13.81

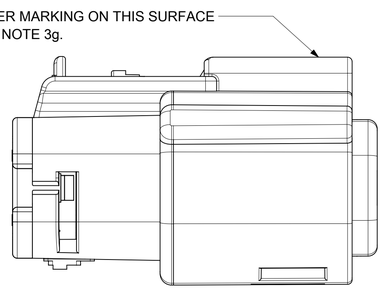

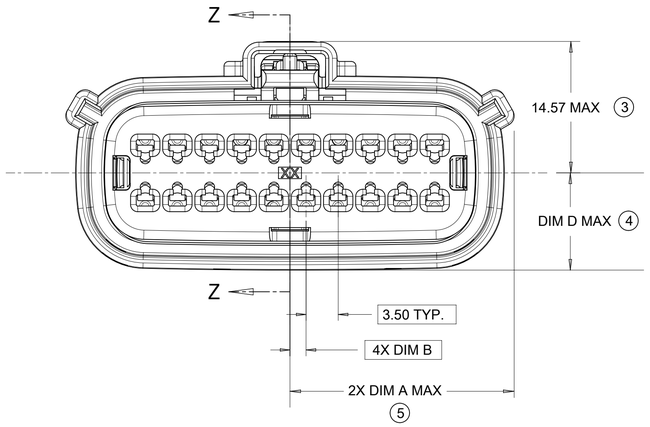

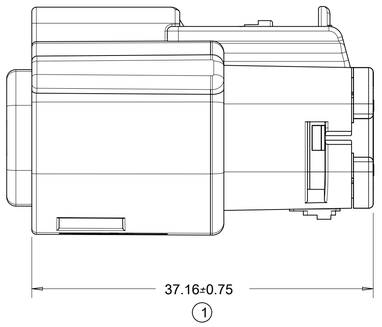

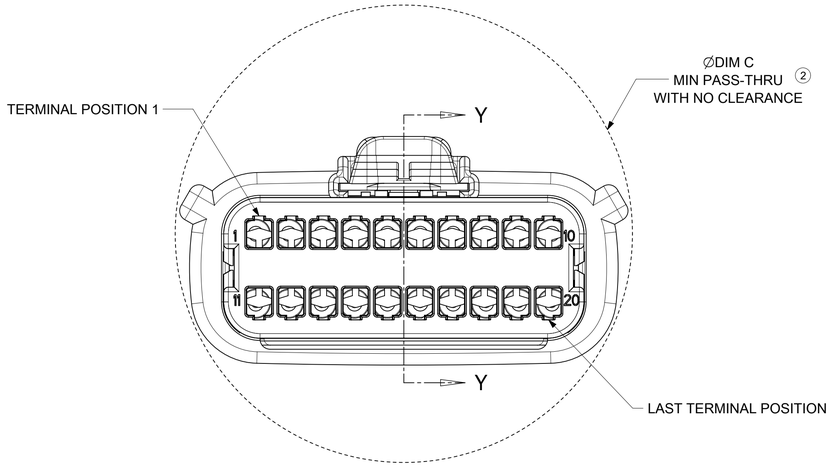

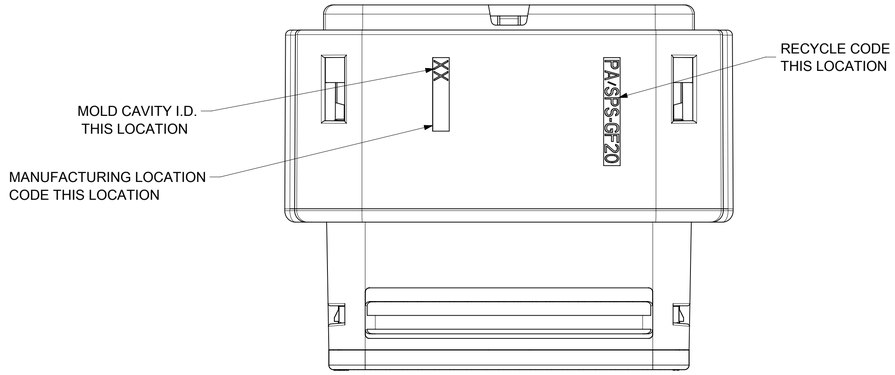

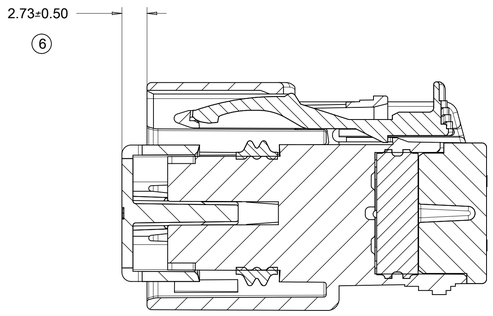

PRIMARY LOCK REINFORCEMENT (PLR) SHOWN
IN PRE-STAGED POSITION

SECTION Z-Z

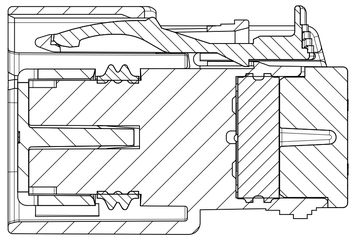

PRIMARY LOCK REINFORCEMENT (PLR) SHOWN
IN FINAL-LOCK POSITION

SECTION Y-Y

SYMBOLS	
F =	0
C =	0
F =	0
S =	0
=	0
C =	0
=	0
=	0
=	0

DIMENSION UNITS	SCALE
mm	1:1

GENERAL TOLERANCES (UNLESS SPECIFIED)

ANGULAR TOL	± 3.0 °
4 PLACES	±
3 PLACES	±
2 PLACES	± 0.1
1 PLACE	± 0.2
0 PLACES	±

DRAFT WHERE APPLICABLE MUST REMAIN WITHIN DIMENSIONS

THIS DRAWING CONTAINS INFORMATION THAT IS PROPRIETARY TO MOLEX ELECTRONIC TECHNOLOGIES, LLC AND SHOULD NOT BE USED WITHOUT WRITTEN PERMISSION

CURRENT REV DESC:

EC NO: 173183
DRWN: DDEB 2018/02/23
CHK'D: MVANSLAMBROU 2018/03/07
APPR: MVANSLAMBROU 2018/03/07

INITIAL REVISION:
DRWN: KBORUSZEWSKI 2014/02/19
APPR: VKOSHY 2014/03/05

THIRD ANGLE PROJECTION | DRAWING: A1-SIZE | SERIES: 160008

molex

MX150 GEN 2 RECEPTACLE
DUAL ROW SEALED ASSEMBLY MAT SEAL

PRODUCT CUSTOMER DRAWING

DOCUMENT NUMBER	DOC TYPE	DOC PART	REVISION
SD-160008-0001	PSD	001	A6

MATERIAL NUMBER	CUSTOMER	SHEET NUMBER
	GENERAL MARKET	5 OF 11

DOCUMENT STATUS	P1	RELEASE DATE	2018/03/07 14:06:48

SHEET DESCRIPTION
BACKSHELL NOTES

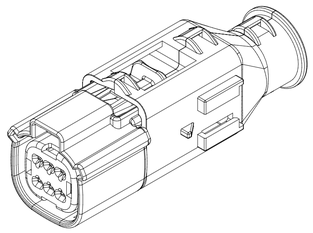

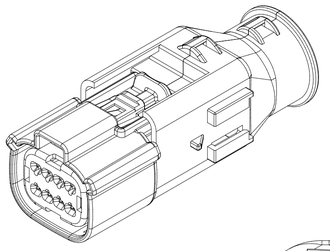

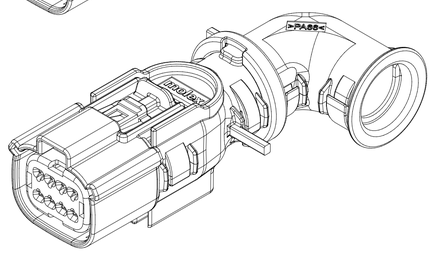

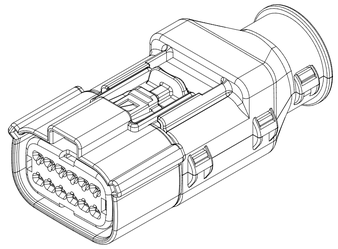

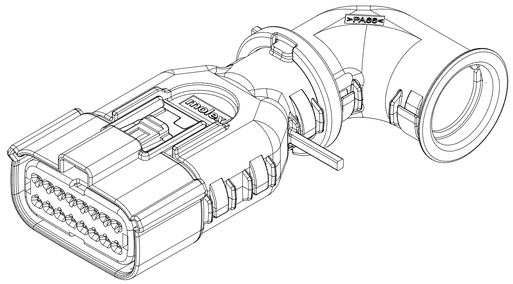

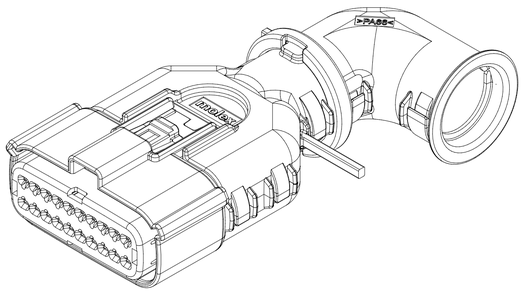

BACKSHELL NOTES: VALID UNLESS OTHERWISE SPECIFIED

1. GENERAL:
a. APPLICATION SPECIFICATION SEE: AS-34951-001
-DESIGNED TO MATE WITH RECEPTACLE SEALED ASSEMBLY
-SPECIFIED IN MOLEX DRAWING SD-33472-0001
-SYSTEM TO BE USED WITH WIRE WITHIN DIAMETER RANGE OF 1.2mm TO 2.69mm
-COMPONENTS ARE OPTIONAL AND MUST BE PURCHASED SEPERATELY
-DESIGN IS OWNED BY SCHLEMMER FOR SCHLEMMER BACKSHELL.
-DESIGN IS OWNED BY MOLEX FOR MOLEX BACKSHELL.
-90° ADAPTOR DESIGN IS OWNED BY MOLEX.
-FOR ADDITIONAL INFORMATION SEE THE BACKSHELL COMPONENT DRAWING SD-34951-0001

BACKSHELL CUSTOMER
MODEL NUMBER LEGEND

34951-XXXX

CUSTOMER MODEL COMPONENTS
- 0 - SCHLEMMER BACKSHELL ONLY
- 1 - SCHLEMMER BACKSHELL & MX150 HOUSING KEY A ASSEMBLY
- 2 - SCHLEMMER BACKSHELL & MX150 HOUSING KEY B ASSEMBLY
- 3 - SCHLEMMER BACKSHELL & MX150 HOUSING KEY C ASSEMBLY
- 4 - SCHLEMMER BACKSHELL & MX150 HOUSING KEY D ASSEMBLY
- 5 - MOLEX BACKSHELL ONLY
- 6 - MOLEX BACKSHELL & MX150 HOUSING KEY A ASSEMBLY
- 7 - MOLEX BACKSHELL & MX150 HOUSING KEY B ASSEMBLY
- 8 - MOLEX BACKSHELL & MX150 HOUSING KEY C ASSEMBLY
- 9 - MOLEX BACKSHELL & MX150 HOUSING KEY D ASSEMBLY

BACKSHELL FEATURES
- 1 - WITH RIBS
- 2 - WITHOUT RIBS
- 3 - 90° ADAPTOR

MX150 CIRCUIT SIZE 04, 06, 08, 12, 16, 20

90° ADAPTOR

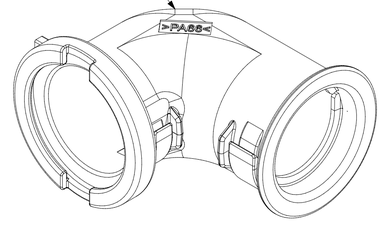

BACKSHELL (BKS)

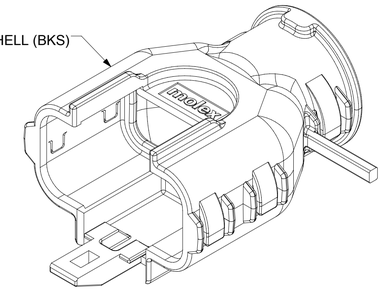

RECEPTACLE SEALED ASSEMBLY

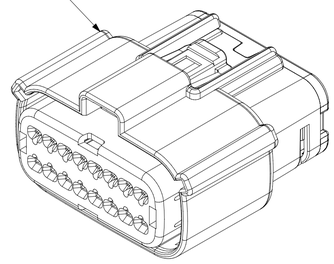

SCALE 2:1

DOCUMENT STATUS	P1	RELEASE DATE	2018/03/07 14:06:48

SYMBOLS	
A = 0	
C = 0	
D = 0	
S = 0	
= 0	
C = 0	
= 0	
= 0	
V = 0	

THIS DRAWING CONTAINS INFORMATION THAT IS PROPRIETARY TO MOLEX ELECTRONIC TECHNOLOGIES, LLC AND SHOULD NOT BE USED WITHOUT WRITTEN PERMISSION

DIMENSION UNITS	SCALE
mm	1:1

GENERAL TOLERANCES (UNLESS SPECIFIED)	
ANGULAR TOL	± 3.0 °
4 PLACES	±
3 PLACES	±
2 PLACES	± 0.1
1 PLACE	± 0.2
0 PLACES	±

DRAFT WHERE APPLICABLE MUST REMAIN WITHIN DIMENSIONS

CURRENT REV DESC:

EC NO: 173183
DRWN: DDEB 2018/02/23
CHK'D: MVANSLAMBROU 2018/03/07
APPR: MVANSLAMBROU 2018/03/07

INITIAL REVISION:
DRWN: KBORUSZEWSKI 2014/02/19
APPR: VKOSHY 2014/03/05

THIRD ANGLE PROJECTION | DRAWING: A1-SIZE | SERIES: 160008

molex

MX150 GEN 2 RECEPTACLE
DUAL ROW SEALED ASSEMBLY MAT SEAL

PRODUCT CUSTOMER DRAWING

DOCUMENT NUMBER	DOC TYPE	DOC PART	REVISION
SD-160008-0001	PSD	001	A6

MATERIAL NUMBER	CUSTOMER	SHEET NUMBER
	GENERAL MARKET	6 OF 11

SHEET DESCRIPTION
SCHLEMMER BACKSHELL

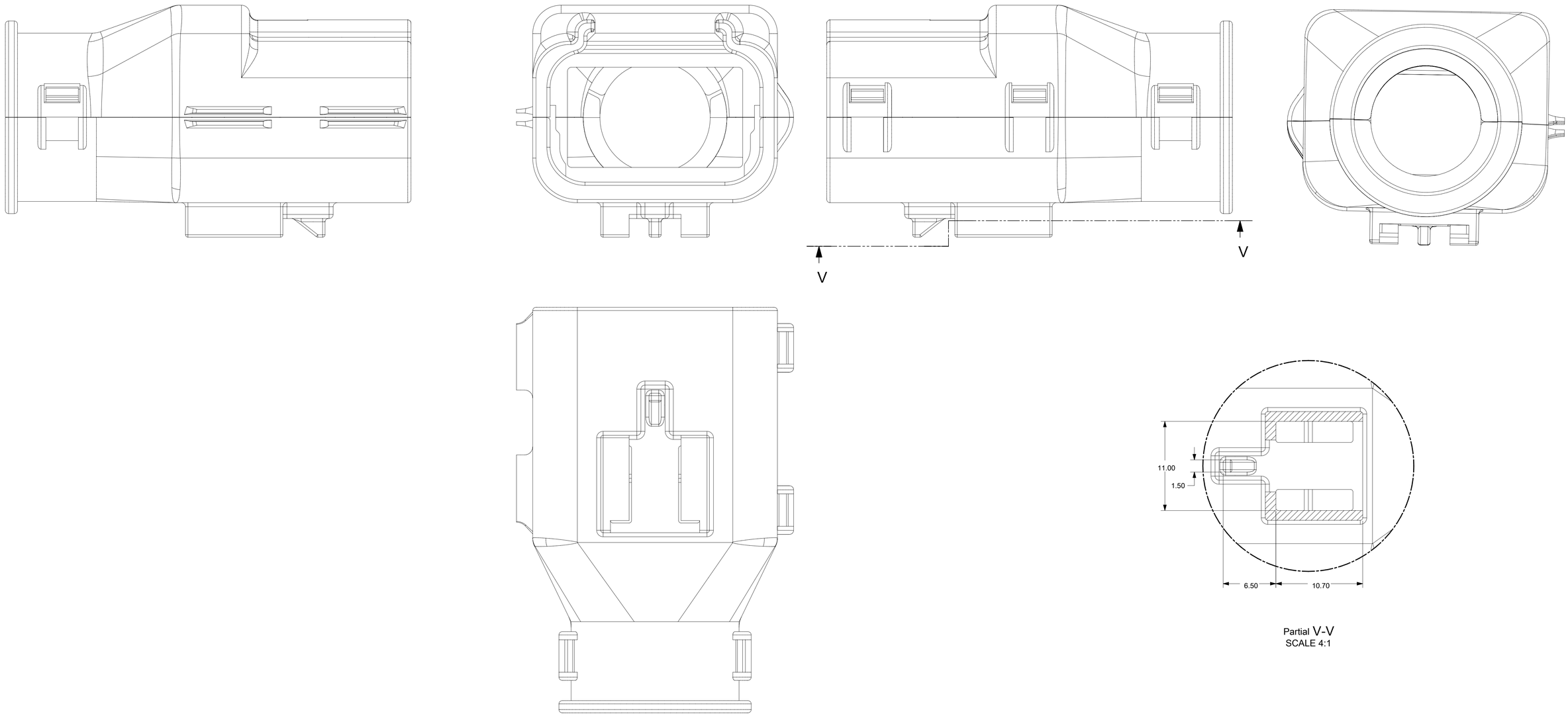

Partial V-V
SCALE 4:1

SYMBOLS	
FA	= 0
FC	= 0
FP	= 0
S	= 0
▼	= 0
C	= 0
☒	= 0
■	= 0
C	= 0

THIS DRAWING CONTAINS INFORMATION THAT IS PROPRIETARY TO MOLEX ELECTRONIC TECHNOLOGIES, LLC AND SHOULD NOT BE USED WITHOUT WRITTEN PERMISSION

DIMENSION UNITS	SCALE
mm	1:1

GENERAL TOLERANCES (UNLESS SPECIFIED)

ANGULAR TOL	±	3.0 °
4 PLACES	±	
3 PLACES	±	
2 PLACES	±	0.1
1 PLACE	±	0.2
0 PLACES	±	

DRAFT WHERE APPLICABLE MUST REMAIN WITHIN DIMENSIONS

CURRENT REV DESC:

EC NO:	173183	
DRWN:	DDEB	2018/02/23
CHK'D:	MVANSLAMBROU	2018/03/07
APPR:	MVANSLAMBROU	2018/03/07

INITIAL REVISION:

DRWN:	KBORUSZEWSKI	2014/02/19
APPR:	VKOSHY	2014/03/05

molex

MX150 GEN 2 RECEPTACLE
DUAL ROW SEALED ASSEMBLY MAT SEAL

PRODUCT CUSTOMER DRAWING

DOCUMENT NUMBER	DOC TYPE	DOC PART	REVISION
SD-160008-0001	PSD	001	A6

THIRD ANGLE PROJECTION	DRAWING	SERIES	MATERIAL NUMBER	CUSTOMER	SHEET NUMBER
	A1-SIZE	160008		GENERAL MARKET	7 OF 11

DOCUMENT STATUS	P1	RELEASE DATE	2018/03/07 14:06:48

SHEET DESCRIPTION

MOLEX BACKSHELL

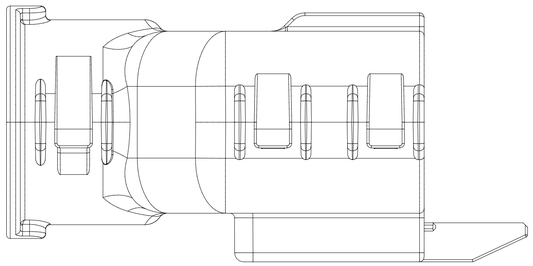

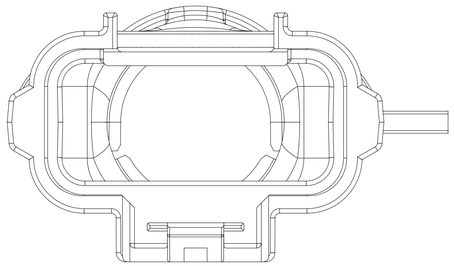

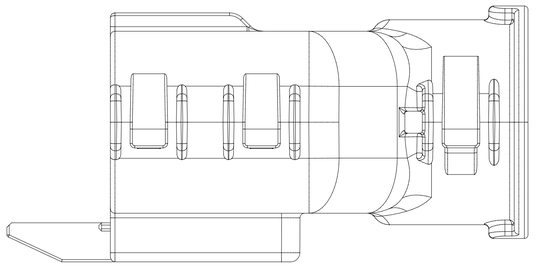

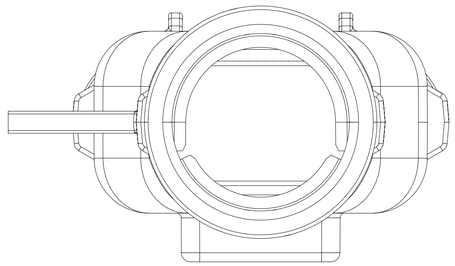

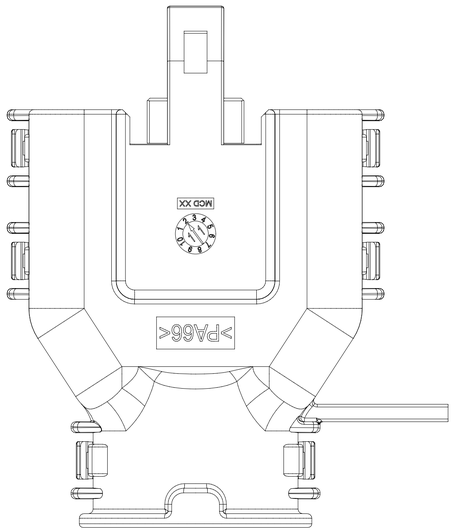

SYMBOLS	THIS DRAWING CONTAINS INFORMATION THAT IS PROPRIETARY TO MOLEX ELECTRONIC TECHNOLOGIES, LLC AND SHOULD NOT BE USED WITHOUT WRITTEN PERMISSION				
A = 0	DIMENSION UNITS: mm	SCALE: 1:1	CURRENT REV DESC:	molex	
B = 0	GENERAL TOLERANCES (UNLESS SPECIFIED)			MX150 GEN 2 RECEPTACLE DUAL ROW SEALED ASSEMBLY MAT SEAL	
C = 0	ANGULAR TOL ± 3.0 °		EC NO: 173183	PRODUCT CUSTOMER DRAWING	
D = 0	4 PLACES ±		DRWN: DDEB 2018/02/23	DOCUMENT NUMBER: SD-160008-0001	DOC TYPE: PSD / DOC PART: 001 / REVISION: A6
E = 0	3 PLACES ±		CHK'D: MVANSLAMBROU 2018/03/07		
F = 0	2 PLACES ± 0.1		APPR: MVANSLAMBROU 2018/03/07		
G = 0	1 PLACE ± 0.2		INITIAL REVISION:		
H = 0	0 PLACES ±		DRWN: KBORUSZEWSKI 2014/02/19		
J = 0	DRAFT WHERE APPLICABLE MUST REMAIN WITHIN DIMENSIONS		APPR: VKOSHY 2014/03/05		
K = 0	THIRD ANGLE PROJECTION	DRAWING: A1-SIZE	SERIES: 160008	MATERIAL NUMBER	CUSTOMER: GENERAL MARKET / SHEET NUMBER: 8 OF 11

DOCUMENT STATUS	P1	RELEASE DATE	2018/03/07 14:06:48

SHEET DESCRIPTION
SCHLEMMER BACKSHELL CONFIGURATIONS

CHARTED DIMENSION	
DESCRIPTION	DIMENSIONS
	H
2X3 STANDARD	N/A
2X3 W/O CLIPSLOT	28.50
2X4 W/ CLIPSLOT	N/A
2X4 W/O CLIPSLOT	N/A
2X6 STANDARD	N/A
2X6 W/O CLIPSLOT	35.83

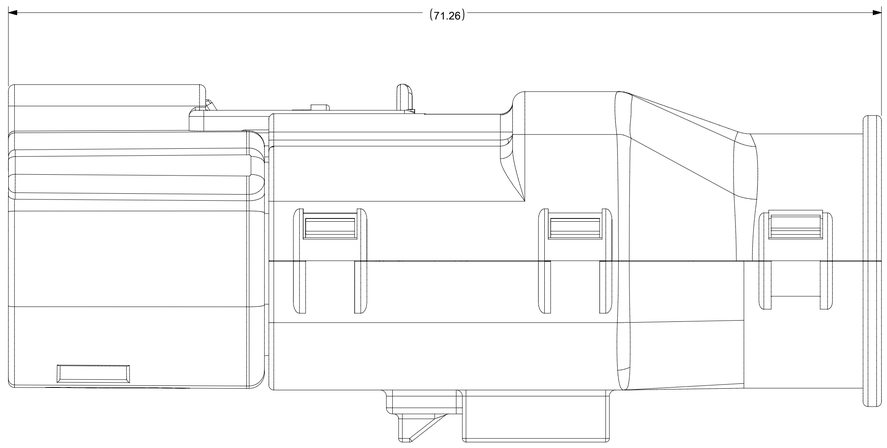

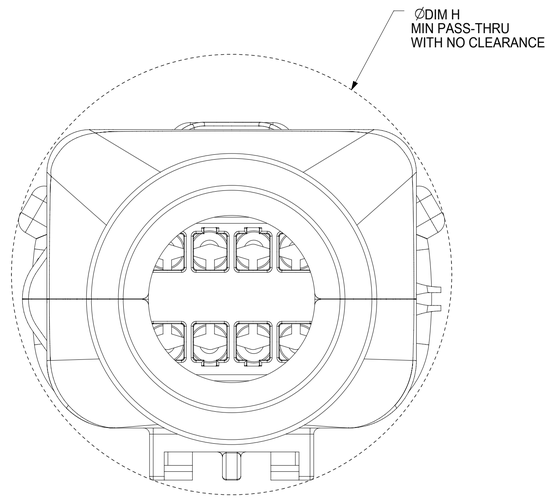

RECEPTACLE SEALED ASSEMBLY WITH RECEPTACLE BACKSHELL

SYMBOLS
A = 0
C = 0
D = 0
S = 0
= 0
C = 0
= 0
= 0
= 0

DIMENSION UNITS	SCALE
mm	1:1
GENERAL TOLERANCES (UNLESS SPECIFIED)	
ANGULAR TOL ± 3.0 °	
4 PLACES ±	
3 PLACES ±	
2 PLACES ± 0.1	
1 PLACE ± 0.2	
0 PLACES ±	
DRAFT WHERE APPLICABLE MUST REMAIN WITHIN DIMENSIONS	

THIS DRAWING CONTAINS INFORMATION THAT IS PROPRIETARY TO MOLEX ELECTRONIC TECHNOLOGIES, LLC AND SHOULD NOT BE USED WITHOUT WRITTEN PERMISSION

CURRENT REV DESC:

EC NO: 173183
DRWN: DDEB 2018/02/23
CHK'D: MVANSLAMBROU 2018/03/07
APPR: MVANSLAMBROU 2018/03/07

INITIAL REVISION:
DRWN: KBORUSZEWSKI 2014/02/19
APPR: VKOSHY 2014/03/05

THIRD ANGLE PROJECTION | DRAWING: A1-SIZE | SERIES: 160008

molex

MX150 GEN 2 RECEPTACLE
DUAL ROW SEALED ASSEMBLY MAT SEAL

PRODUCT CUSTOMER DRAWING

DOCUMENT NUMBER	DOC TYPE	DOC PART	REVISION
SD-160008-0001	PSD	001	A6

MATERIAL NUMBER	CUSTOMER	SHEET NUMBER
	GENERAL MARKET	9 OF 11

DOCUMENT STATUS	P1	RELEASE DATE	2018/03/07 14:06:48

SHEET DESCRIPTION

MOLEX BACKSHELL CONFIGURATIONS

CHARTED DIMENSIONS				
DESCRIPTION	DIMENSIONS			
	J	K	L	M
2X2 W/O CLIPSLOT	TBD	TBD	TBD	TBD
2X2 W/ CLIP SLOT	TBD	TBD	TBD	TBD
2X2 LENGTHENED	TBD	TBD	TBD	TBD
2X4 W/ CLIPSLOT	58.44	32.85	32.10	44.26
2X4 W/O CLIPSLOT	N/A	N/A	N/A	N/A
2X8 W/ CLIPSLOT	N/A	N/A	N/A	N/A
2X8 W/O CLIPSLOT	N/A	N/A	N/A	N/A
2X10 W/ CLIPSLOT	67.24	42.65	36.10	56.49
2X10 W/O CLIPSLOT	N/A	N/A	N/A	N/A

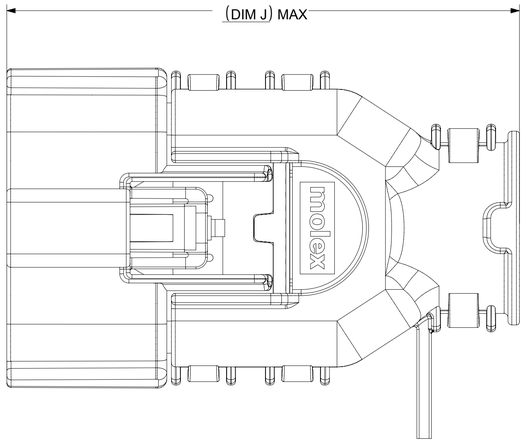

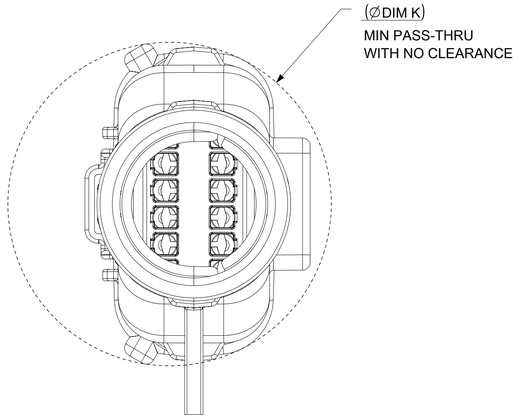

RECEPTACLE SEALED ASSEMBLY WITH RECEPTACLE BACKSHELL

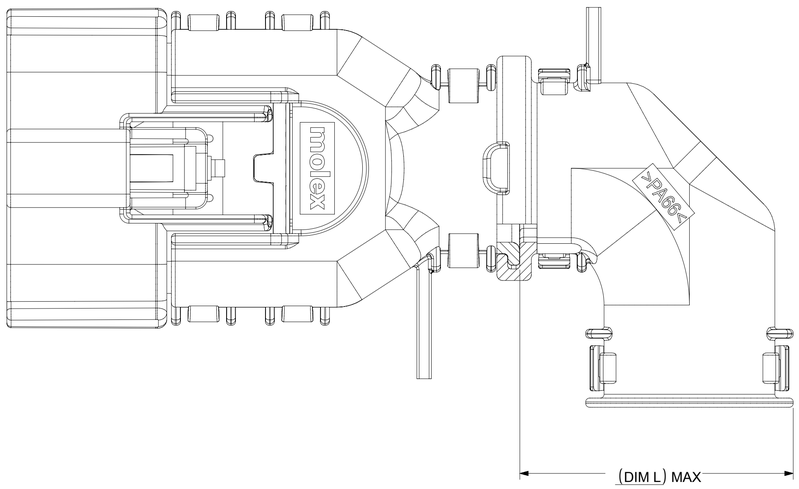

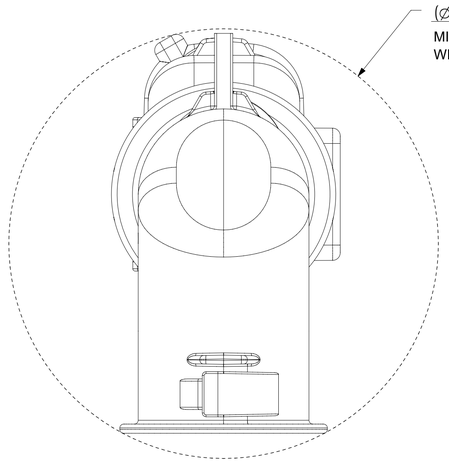

ADD THE VALUE OF 'L' TO THE TOTAL DIMENSION
FOR WHENEVER ADAPTOR IS USED

DOCUMENT STATUS	P1	RELEASE DATE	2018/03/07 14:06:48

SYMBOLS
A = 0
E = 0
F = 0
S = 0
B = 0
C = 0
D = 0
G = 0
V = 0

THIS DRAWING CONTAINS INFORMATION THAT IS PROPRIETARY TO MOLEX ELECTRONIC TECHNOLOGIES, LLC AND SHOULD NOT BE USED WITHOUT WRITTEN PERMISSION

DIMENSION UNITS	SCALE
mm	1:1

GENERAL TOLERANCES (UNLESS SPECIFIED)

ANGULAR TOL	±	3.0 °
4 PLACES	±	
3 PLACES	±	
2 PLACES	±	0.1
1 PLACE	±	0.2
0 PLACES	±	

DRAFT WHERE APPLICABLE MUST REMAIN WITHIN DIMENSIONS

CURRENT REV DESC:

EC NO: 173183
DRWN: DDEB 2018/02/23
CHK'D: MVANSLAMBROU 2018/03/07
APPR: MVANSLAMBROU 2018/03/07

INITIAL REVISION:
DRWN: KBORUSZEWSKI 2014/02/19
APPR: VKOSHY 2014/03/05

THIRD ANGLE PROJECTION | DRAWING: A1-SIZE | SERIES: 160008

molex

MX150 GEN 2 RECEPTACLE
DUAL ROW SEALED ASSEMBLY MAT SEAL

PRODUCT CUSTOMER DRAWING

DOCUMENT NUMBER	DOC TYPE	DOC PART	REVISION
SD-160008-0001	PSD	001	A6

MATERIAL NUMBER	CUSTOMER	SHEET NUMBER
	GENERAL MARKET	10 OF 11

SHEET DESCRIPTION
2X10 CONNECTOR INTERFACE DEFINITION

SEE THE FINAL SHEET ON SD-33472-0001 FOR 2X10 CONNECTOR INTERFACE DEFINITION

molex

MX150 GEN 2 RECEPTACLE 2X4 SEALED ASSEMBLY MAT SEAL
BOM AND PIN OUT SHEET

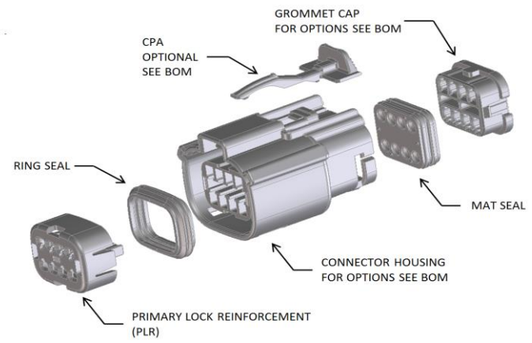

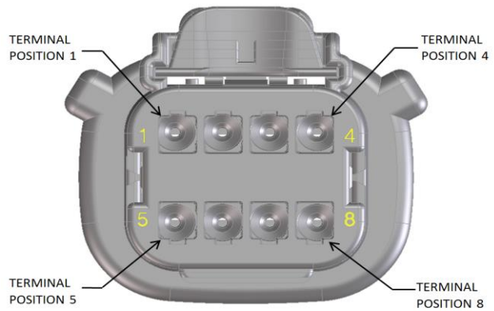

ABBREVIATION	DESCRIPTION	COLOR	MATERIAL
A-BLK	HOUSING KEYING OPTION A	BLACK	SPS/NYLON GF20
A-YW	HOUSING KEYING OPTION A	YELLOW	SPS/NYLON GF20
B-LG	HOUSING KEYING OPTION B	LIGHT GRAY	SPS/NYLON GF20
C-DG	HOUSING KEYING OPTION C	DARK GRAY	SPS/NYLON GF20
C-BR	HOUSING KEYING OPTION C	BROWN	SPS/NYLON GF20
D-SG	HOUSING KEYING OPTION D	STONE GRAY	SPS/NYLON GF20
D-BLK	HOUSING KEYING OPTION D	BLACK	SPS/NYLON GF20
D-GR	HOUSING KEYING OPTION D	GREEN	SPS/NYLON GF20
A-BLK-CLIP	HOUSING KEYING OPTION A WITH CLIPSLOT	BLACK	SPS/NYLON GF20
B-LG-CLIP	HOUSING KEYING OPTION B WITH CLIPSLOT	LIGHT GRAY	SPS/NYLON GF20
C-DG-CLIP	HOUSING KEYING OPTION C WITH CLIPSLOT	DARK GRAY	SPS/NYLON GF20
C-BR-CLIP	HOUSING KEYING OPTION C WITH CLIPSLOT	BROWN	SPS/NYLON GF20
D-SG-CLIP	HOUSING KEYING OPTION D WITH CLIPSLOT	STONE GRAY	SPS/NYLON GF20
D-GR-CLIP	HOUSING KEYING OPTION D WITH CLIPSLOT	GREEN	SPS/NYLON GF20
D-BLK-CLIP	HOUSING KEYING OPTION D WITH CLIPSLOT	BLACK	SPS/NYLON GF20
GCP	GROMMET CAP (PLUGGED)	BLACK	SPS/NYLON GF20
GCO	GROMMET CAP (OPEN)	BLACK	SPS/NYLON GF20
PLR	PLR	NATURAL	SPS/NYLON GF20
CPA	CPA	RED	PBT GF20
M	MAT SEAL	LIGHT BLUE	INHERENTLY LUBRICATED SILICONE
R	RING SEAL	GREEN	INHERENTLY LUBRICATED SILICONE
RR	RING SEAL	RUST RED	INHERENTLY LUBRICATED SILICONE

FOR ADDITIONAL INFORMATION SEE E-160008-0001
SD-160008-0001

ASSEMBLY DESCRIPTION	ASSEMBLY PART NUMBER	COMPONENT						BLOCKED TERMINALS								STATUS	COMMENTS	OPTIONAL ATTATCHMENTS SOLD SEPERATELY			
		THE PRESENCE OF AN ABBREVIATION INDICATES THE PRESENCE OF THAT COMPONENT.						CAVITY WITH A NUMBER INDICATES BLOCKED TERMINAL POSITION CAVITY WITHOUT A NUMBER INDICATES OPEN TERMINAL POSITION										BACKSHELL WITH RIBS	BACKSHELL WITHOUT RIBS	90˚ ADAPTOR WITH RIBS	90˚ ADAPTOR WITHOUT RIBS
		HOUSING KEY/COLOR	GROMMET CAP	PLR	CPA	MAT SEAL	RING SEAL	1	2	3	4	5	6	7	8						
KEY A, BLACK, W/O CPA	160008-4001	A-BLK	GCO	PLR		M	R									PLANNED OBSOLESCENCE	SEE 160127-4801	N/A	N/A	N/A	N/A
KEY B, LIGHT GRAY, W/O CPA	160008-4002	B-LG	GCO	PLR		M	R									PLANNED OBSOLESCENCE	SEE 160127-4802	N/A	N/A	N/A	N/A
KEY C, DARK GRAY, W/O CPA	160008-4003	C-DG	GCO	PLR		M	R									PLANNED OBSOLESCENCE	SEE 160127-4803	N/A	N/A	N/A	N/A
KEY D, STONE GRAY, W/O CPA	160008-4004	D-SG	GCO	PLR		M	R									PLANNED OBSOLESCENCE	SEE 160127-4804	N/A	N/A	N/A	N/A
KEY A, BLACK, W/O CPA	160127-4801	A-BLK	GCO	PLR		M	RR									SALEABLE		N/A	N/A	N/A	N/A
KEY B, LIGHT GRAY, W/O CPA	160127-4802	B-LG	GCO	PLR		M	RR									SALEABLE		N/A	N/A	N/A	N/A
KEY C, BROWN, W/O CPA	160127-4803	C-BR	GCO	PLR		M	RR									NOT AVAILABLE		N/A	N/A	N/A	N/A
KEY D, GREEN, W/O CPA	160127-4804	D-GR	GCO	PLR		M	RR									NOT AVAILABLE		N/A	N/A	N/A	N/A
KEY D, BLACK, W/O CPA	160127-4805	D-BLK	GCO	PLR		M	RR									SALEABLE		N/A	N/A	N/A	N/A
KEY A, BLACK, W/CPA	160127-4806	A-BLK	GCO	PLR	CPA	M	RR									SALEABLE		N/A	N/A	N/A	N/A
KEY B, LIGHT GRAY, W/CPA	160127-4807	B-LG	GCO	PLR	CPA	M	RR									SALEABLE		N/A	N/A	N/A	N/A
KEY C, BROWN, W/CPA	160127-4808	C-BR	GCO	PLR	CPA	M	RR									NOT AVAILABLE		N/A	N/A	N/A	N/A
KEY D, GREEN, W/CPA	160127-4809	D-GR	GCO	PLR	CPA	M	RR									NOT AVAILABLE		N/A	N/A	N/A	N/A
NOT AVAILABLE	160127-4810																				
KEY A, BLACK, W/O CPA	160127-4811	A-BLK	GCP	PLR		M	RR				4					SALEABLE		N/A	N/A	N/A	N/A
KEY B, LIGHT GRAY, W/O CPA	160127-4812	B-LG	GCP	PLR		M	RR				4					SALEABLE		N/A	N/A	N/A	N/A
KEY C, BROWN, W/O CPA	160127-4813	C-BR	GCP	PLR		M	RR				4					NOT AVAILABLE		N/A	N/A	N/A	N/A
KEY D, GREEN, W/O CPA	160127-4814	D-GR	GCP	PLR		M	RR				4					NOT AVAILABLE		N/A	N/A	N/A	N/A
NOT AVAILABLE	160127-4815																				
KEY A, BLACK, W/CPA	160127-4816	A-BLK	GCP	PLR	CPA	M	RR				4					SALEABLE		N/A	N/A	N/A	N/A
KEY B, LIGHT GRAY, W/CPA	160127-4817	B-LG	GCP	PLR	CPA	M	RR				4					SALEABLE		N/A	N/A	N/A	N/A
KEY C, BROWN, W/CPA	160127-4818	C-BR	GCP	PLR	CPA	M	RR				4					NOT AVAILABLE		N/A	N/A	N/A	N/A
KEY D, GREEN, W/CPA	160127-4819	D-GR	GCP	PLR	CPA	M	RR				4					NOT AVAILABLE		N/A	N/A	N/A	N/A
NOT AVAILABLE	160127-4820																				
KEY A, BLACK, W/O CPA	160127-4821	A-BLK	GCP	PLR		M	RR				4	5				SALEABLE		N/A	N/A	N/A	N/A
KEY B, LIGHT GRAY, W/O CPA	160127-4822	B-LG	GCP	PLR		M	RR				4	5				SALEABLE		N/A	N/A	N/A	N/A
KEY C, BROWN, W/O CPA	160127-4823	C-BR	GCP	PLR		M	RR				4	5				NOT AVAILABLE		N/A	N/A	N/A	N/A
KEY D, GREEN, W/O CPA	160127-4824	D-GR	GCP	PLR		M	RR				4	5				NOT AVAILABLE		N/A	N/A	N/A	N/A
NOT AVAILABLE	160127-4825																				
KEY A, BLACK, W/CPA	160127-4826	A-BLK	GCP	PLR	CPA	M	RR				4	5				SALEABLE		N/A	N/A	N/A	N/A
KEY B, LIGHT GRAY, W/CPA	160127-4827	B-LG	GCP	PLR	CPA	M	RR				4	5				SALEABLE		N/A	N/A	N/A	N/A
KEY C, BROWN, W/CPA	160127-4828	C-BR	GCP	PLR	CPA	M	RR				4	5				NOT AVAILABLE		N/A	N/A	N/A	N/A
KEY D, GREEN, W/CPA	160127-4829	D-GR	GCP	PLR	CPA	M	RR				4	5				NOT AVAILABLE		N/A	N/A	N/A	N/A
NOT AVAILABLE	160127-4830																				
KEY A, BLACK, W/O CPA	160127-4831	A-BLK	GCP	PLR		M	RR	1			4	5				SALEABLE		N/A	N/A	N/A	N/A
KEY B, LIGHT GRAY, W/O CPA	160127-4832	B-LG	GCP	PLR		M	RR	1			4	5				SALEABLE		N/A	N/A	N/A	N/A
KEY C, BROWN, W/O CPA	160127-4833	C-BR	GCP	PLR		M	RR	1			4	5				NOT AVAILABLE		N/A	N/A	N/A	N/A
KEY D, GREEN, W/O CPA	160127-4834	D-GR	GCP	PLR		M	RR	1			4	5				NOT AVAILABLE		N/A	N/A	N/A	N/A
NOT AVAILABLE	160127-4835																				
KEY A, BLACK, W/CPA	160127-4836	A-BLK	GCP	PLR	CPA	M	RR	1			4	5				SALEABLE		N/A	N/A	N/A	N/A
KEY B, LIGHT GRAY, W/CPA	160127-4837	B-LG	GCP	PLR	CPA	M	RR	1			4	5				SALEABLE		N/A	N/A	N/A	N/A
KEY C, BROWN, W/CPA	160127-4838	C-BR	GCP	PLR	CPA	M	RR	1			4	5				NOT AVAILABLE		N/A	N/A	N/A	N/A
KEY D, GREEN, W/CPA	160127-4839	D-GR	GCP	PLR	CPA	M	RR	1			4	5				NOT AVAILABLE		N/A	N/A	N/A	N/A
NOT AVAILABLE	160127-4840																				
KEY A, BLACK, W/O CPA	160127-4841	A-BLK	GCP	PLR		M	RR	1			4	5			8	SALEABLE		N/A	N/A	N/A	N/A
KEY B, LIGHT GRAY, W/O CPA	160127-4842	B-LG	GCP	PLR		M	RR	1			4	5			8	SALEABLE		N/A	N/A	N/A	N/A
KEY C, BROWN, W/O CPA	160127-4843	C-BR	GCP	PLR		M	RR	1			4	5			8	NOT AVAILABLE		N/A	N/A	N/A	N/A
KEY D, GREEN, W/O CPA	160127-4844	D-GR	GCP	PLR		M	RR	1			4	5			8	NOT AVAILABLE		N/A	N/A	N/A	N/A

molex

MX150 GEN 2 RECEPTACLE 2X4 SEALED ASSEMBLY MAT SEAL
BOM AND PIN OUT SHEET

ASSEMBLY DESCRIPTION	ASSEMBLY PART NUMBER	COMPONENT						BLOCKED TERMINALS								STATUS	COMMENTS	OPTIONAL ATTATCHMENTS SOLD SEPERATELY			
		THE PRESENCE OF AN ABBREVIATION INDICATES THE PRESENCE OF THAT COMPONENT.						CAVITY WITH A NUMBER INDICATES BLOCKED TERMINAL POSITION CAVITY WITHOUT A NUMBER INDICATES OPEN TERMINAL POSITION													
		HOUSING KEY/COLOR	GROMMET CAP	PLR	CPA	MAT SEAL	RING SEAL	1	2	3	4	5	6	7	8			BACKSHELL WITH RIBS	BACKSHELL WITHOUT RIBS	90˚ ADAPTOR WITH RIBS	90˚ ADAPTOR WITHOUT RIBS
NOT AVAILABLE	160127-4845																				
KEY A, BLACK, W/CPA	160127-4846	A-BLK	GCP	PLR	CPA	M	RR	1			4	5			8	SALEABLE		N/A	N/A	N/A	N/A
KEY B, LIGHT GRAY, W/CPA	160127-4847	B-LG	GCP	PLR	CPA	M	RR	1			4	5			8	SALEABLE		N/A	N/A	N/A	N/A
KEY C, BROWN, W/CPA	160127-4848	C-BR	GCP	PLR	CPA	M	RR	1			4	5			8	NOT AVAILABLE		N/A	N/A	N/A	N/A
KEY D, GREEN, W/CPA	160127-4849	D-GR	GCP	PLR	CPA	M	RR	1			4	5			8	NOT AVAILABLE		N/A	N/A	N/A	N/A
NOT AVAILABLE	160127-4850																				
KEY A, BLACK, W/O CPA	160127-4851	A-BLK	GCP	PLR		M	RR	1	2	3	4	5	6	7	8	SALEABLE		N/A	N/A	N/A	N/A
KEY B, LIGHT GRAY, W/O CPA	160127-4852	B-LG	GCP	PLR		M	RR	1	2	3	4	5	6	7	8	SALEABLE		N/A	N/A	N/A	N/A
KEY C, BROWN, W/O CPA	160127-4853	C-BR	GCP	PLR		M	RR	1	2	3	4	5	6	7	8	NOT AVAILABLE		N/A	N/A	N/A	N/A
KEY D, GREEN, W/O CPA	160127-4854	D-GR	GCP	PLR		M	RR	1	2	3	4	5	6	7	8	NOT AVAILABLE		N/A	N/A	N/A	N/A
KEY D, BLACK, W/O CPA	160127-4855	D-BLK	GCP	PLR		M	RR	1	2	3	4	5	6	7	8	SALEABLE		N/A	N/A	N/A	N/A
KEY A, BLACK, W/CPA	160127-4856	A-BLK	GCP	PLR	CPA	M	RR		2				6	7		SALEABLE		N/A	N/A	N/A	N/A
KEY A, BLACK, W/CPA	160127-4857	A-BLK	GCP	PLR	CPA	M	RR	1	2			5	6	7		SALEABLE		N/A	N/A	N/A	N/A
KEY A, BLACK, W/CPA	160127-4858	A-BLK	GCP	PLR	CPA	M	RR	1	2	3		5	6	7		SALEABLE		N/A	N/A	N/A	N/A
KEY A, BLACK, W/O CPA	160127-4859	A-BLK	GCP	PLR		M	RR	1	2	3			6	7	8	SALEABLE		N/A	N/A	N/A	N/A
KEY D, BLACK, W/O CPA	160127-4860	D-BLK	GCP	PLR		M	RR				4					SALEABLE		N/A	N/A	N/A	N/A
KEY A, BLACK, W/O CPA	160127-4861	A-BLK	GCP	PLR		M	RR								8	SALEABLE		N/A	N/A	N/A	N/A
KEY A, BLACK, W/O CPA	160127-4862	A-BLK	GCP	PLR		M	RR	1								SALEABLE		N/A	N/A	N/A	N/A
KEY A, BLACK, W/O CPA	160127-4863	A-BLK	GCP	PLR		M	RR		2	3		5			8	SALEABLE		N/A	N/A	N/A	N/A
KEY A, BLACK, W/O CPA	160127-4864	A-BLK	GCP	PLR		M	RR	1		3		5				SALEABLE		N/A	N/A	N/A	N/A
KEY A, BLACK, W/O CPA	160127-4865	A-BLK	GCP	PLR		M	RR	1					6			SALEABLE		N/A	N/A	N/A	N/A
KEY A, BLACK, W/O CPA	160127-4866	A-BLK	GCP	PLR		M	RR		2	3		5	6		8	SALEABLE		N/A	N/A	N/A	N/A
KEY A, BLACK, W/O CPA	160127-4867	A-BLK	GCP	PLR		M	RR	1		3		5	6			SALEABLE		N/A	N/A	N/A	N/A
KEY A, BLACK, W/O CPA	160127-4868	A-BLK	GCP	PLR		M	RR					5	6		8	SALEABLE		N/A	N/A	N/A	N/A
KEY A, BLACK, W/O CPA	160127-4869	A-BLK	GCP	PLR		M	RR						6			SALEABLE		N/A	N/A	N/A	N/A
KEY A, BLACK, W/O CPA	160127-4870	A-BLK	GCP	PLR		M	RR	1		3		5	6	7	8	SALEABLE		N/A	N/A	N/A	N/A
KEY A, BLACK, W/O CPA	160127-4871	A-BLK	GCP	PLR		M	RR		2	3	4	5	6	7		SALEABLE		N/A	N/A	N/A	N/A
KEY A, BLACK, W/O CPA	160127-4872	A-BLK	GCP	PLR		M	RR							7	8	SALEABLE		N/A	N/A	N/A	N/A
KEY A, BLACK, W/O CPA	160127-4873	A-BLK	GCP	PLR		M	RR		2	3			6	7	8	SALEABLE		N/A	N/A	N/A	N/A
KEY A, BLACK, W/O CPA	160127-4874	A-BLK	GCP	PLR		M	RR		2	3						SALEABLE		N/A	N/A	N/A	N/A
KEY A, BLACK, W/O CPA	160127-4875	A-BLK	GCP	PLR		M	RR	1			4					SALEABLE		N/A	N/A	N/A	N/A
KEY A, BLACK, W/O CPA	160127-4876	A-BLK	GCP	PLR		M	RR		2	3		5	6	7	8	SALEABLE		N/A	N/A	N/A	N/A
KEY A, BLACK, W/CPA	160127-4877	A-BLK	GCP	PLR	CPA	M	RR								8	SALEABLE		N/A	N/A	N/A	N/A
KEY A, BLACK, W/O CPA	160127-4878	A-BLK	GCP	PLR		M	RR			3		5	6			SALEABLE		N/A	N/A	N/A	N/A
KEY C, DARK GRAY, W/O CPA	160127-4879	C-DG	GCO	PLR		M	RR									SALEABLE		N/A	N/A	N/A	N/A
KEY D, STONE GRAY, W/O CPA	160127-4880	D-SG	GCO	PLR		M	RR									SALEABLE		N/A	N/A	N/A	N/A
KEY C, DARK GRAY, W/CPA	160127-4881	C-DG	GCO	PLR	CPA	M	RR									SALEABLE		N/A	N/A	N/A	N/A
KEY D, STONE GRAY, W/CPA	160127-4882	D-SG	GCO	PLR	CPA	M	RR									SALEABLE		N/A	N/A	N/A	N/A
KEY A, BLACK, W/O CPA	160127-4883	A-BLK	GCP	PLR		M	RR		2	3	4	5		7	8	SALEABLE		N/A	N/A	N/A	N/A
KEY A, BLACK, W/O CPA	160127-4884	A-BLK	GCP	PLR		M	RR			3			6	7		SALEABLE		N/A	N/A	N/A	N/A
KEY A, BLACK, W/O CPA	160127-4885	A-BLK	GCP	PLR		M	RR		2	3	4	5	6		8	SALEABLE		N/A	N/A	N/A	N/A
KEY A, BLACK, W/O CPA	160127-4886	A-BLK	GCP	PLR		M	RR			3			6		8	SALEABLE		N/A	N/A	N/A	N/A
KEY B, LIGHT GRAY, W/CPA	160127-4887	B-LG	GCP	PLR	CPA	M	RR								8	SALEABLE		N/A	N/A	N/A	N/A
KEY B, LIGHT GRAY, W/O CPA	160127-4888	B-LG	GCP	PLR		M	RR	1					6			SALEABLE		N/A	N/A	N/A	N/A
KEY A, BLACK, W/O CPA	160127-4889	A-BLK	GCP	PLR		M	RR	1				5				SALEABLE		N/A	N/A	N/A	N/A
KEY A, YELLOW, W/CPA	160127-4890	A-YW	GCP	PLR	CPA	M	RR		2	3						NOT AVAILABLE		N/A	N/A	N/A	N/A
KEY A, YELLOW, W/CPA	160127-4891	A-YW	GCO	PLR	CPA	M	RR									NOT AVAILABLE		N/A	N/A	N/A	N/A
KEY A, YELLOW, W/O CPA	160127-4892	A-YW	GCO	PLR		M	RR									NOT AVAILABLE		N/A	N/A	N/A	N/A
KEY A, BLACK, W/CPA	160127-4893	A-BLK	GCP	PLR	CPA	M	RR						6			SALEABLE		N/A	N/A	N/A	N/A
KEY A, BLACK, W/CPA	160127-4894	A-BLK	GCP	PLR	CPA	M	RR	1	2	3			6	7	8	SALEABLE		N/A	N/A	N/A	N/A
KEY A, BLACK, W/O CPA	160127-4895	A-BLK	GCP	PLR		M	RR	1	2							SALEABLE		N/A	N/A	N/A	N/A
KEY A, BLACK, W/O CPA	160127-5001	A-BLK	GCP	PLR		M	RR	1	2	3	4					SALEABLE		N/A	N/A	N/A	N/A
KEY B, LIGHT GRAY, W/O CPA	160127-5002	B-LG	GCP	PLR		M	RR						6			SALEABLE		N/A	N/A	N/A	N/A
KEY A, BLACK, W/O CPA	160127-5003	A-BLK	GCP	PLR		M	RR	1			4					SALEABLE		N/A	N/A	N/A	N/A
KEY A, BLACK, W/O CPA	160127-5004	A-BLK	GCP	PLR		M	RR		2	3		5	6	7	8	SALEABLE		N/A	N/A	N/A	N/A
KEY A, BLACK, W/CPA	160127-5005	A-BLK	GCP	PLR	CPA	M	RR								8	SALEABLE		N/A	N/A	N/A	N/A
KEY A, BLACK, W/O CPA	160127-5006	A-BLK	GCP	PLR		M	RR	1	2	3	4	5	6			SALEABLE		N/A	N/A	N/A	N/A
KEY A, BLACK, W/CPA	160127-5007	A-BLK	GCP	PLR	CPA	M	RR						6	7		SALEABLE		N/A	N/A	N/A	N/A
KEY A, BLACK, W/CPA	160127-5008	A-BLK	GCP	PLR	CPA	M	RR							7		SALEABLE		N/A	N/A	N/A	N/A
KEY D, STONE GRAY, W/CPA	160127-5009	D-SG	GCP	PLR	CPA	M	RR				4					SALEABLE		N/A	N/A	N/A	N/A
KEY D, STONE GRAY, W/CPA	160127-5010	D-SG	GCP	PLR	CPA	M	RR				4	5				SALEABLE		N/A	N/A	N/A	N/A
KEY D, STONE GRAY, W/CPA	160127-5011	D-SG	GCP	PLR	CPA	M	RR				4	5	6			SALEABLE		N/A	N/A	N/A	N/A
KEY A, BLACK, W/O CPA	160127-5012	A-BLK	GCP	PLR		M	RR				4			7	8	SALEABLE		N/A	N/A	N/A	N/A
KEY A, BLACK, W/CPA	160127-5013	A-BLK	GCP	PLR	CPA	M	RR			3	4	5	6	7	8	SALEABLE		N/A	N/A	N/A	N/A
KEY A, BLACK, W/O CPA	160127-5014	A-BLK	GCP	PLR		M	RR			3	4	5	6	7	8	SALEABLE		N/A	N/A	N/A	N/A
KEY A, BLACK, W/CPA	160127-5015	A-BLK	GCP	PLR	CPA	M	RR				4			7	8	SALEABLE		N/A	N/A	N/A	N/A
KEY A, BLACK, W/O CPA	160127-5016	A-BLK	GCP	PLR		M	RR						6	7	8	SALEABLE		N/A	N/A	N/A	N/A
KEY A, BLACK, W/O CPA	160127-5017	A-BLK	GCP	PLR		M	RR	1		3	4				8	SALEABLE		N/A	N/A	N/A	N/A
KEY A, BLACK, W/CPA	160127-5018	A-BLK	GCP	PLR	CPA	M	RR					5	6	7	8	SALEABLE		N/A	N/A	N/A	N/A
KEY A, BLACK, W/CPA	160127-5019	A-BLK	GCP	PLR	CPA	M	RR							7	8	SALEABLE		N/A	N/A	N/A	N/A
KEY A, BLACK, W/CPA	160127-5020	A-BLK	GCP	PLR	CPA	M	RR		2	3	4		6	7	8	SALEABLE		N/A	N/A	N/A	N/A

molex

MX150 GEN 2 RECEPTACLE 2X4 SEALED ASSEMBLY MAT SEAL
BOM AND PIN OUT SHEET

ASSEMBLY DESCRIPTION	ASSEMBLY PART NUMBER	COMPONENT						BLOCKED TERMINALS								STATUS	COMMENTS	OPTIONAL ATTATCHMENTS SOLD SEPERATELY			
		THE PRESENCE OF AN ABBREVIATION INDICATES THE PRESENCE OF THAT COMPONENT.						CAVITY WITH A NUMBER INDICATES BLOCKED TERMINAL POSITION CAVITY WITHOUT A NUMBER INDICATES OPEN TERMINAL POSITION													
		HOUSING KEY/COLOR	GROMMET CAP	PLR	CPA	MAT SEAL	RING SEAL	1	2	3	4	5	6	7	8			BACKSHELL WITH RIBS	BACKSHELL WITHOUT RIBS	90˚ ADAPTOR WITH RIBS	90˚ ADAPTOR WITHOUT RIBS
KEY A, BLACK, W/CPA	160127-5021	A-BLK	GCP	PLR	CPA	M	RR	1	2	3	4	5	6	7	8	SALEABLE		N/A	N/A	N/A	N/A
KEY A, BLACK, W/CPA	160127-5022	A-BLK	GCP	PLR	CPA	M	RR	1				5				SALEABLE		N/A	N/A	N/A	N/A
KEY A, BLACK, W/O CPA	160127-5023	A-BLK	GCP	PLR		M	RR					5	6	7	8	SALEABLE		N/A	N/A	N/A	N/A
KEY A, BLACK, W/O CPA	160127-5024	A-BLK	GCP	PLR		M	RR			3	4					SALEABLE		N/A	N/A	N/A	N/A
KEY D, STONE GRAY, W/O CPA	160127-5025	D-SG	GCP	PLR		M	RR				4	5	6			SALEABLE		N/A	N/A	N/A	N/A
KEY D, STONE GRAY, W/O CPA	160127-5026	D-SG	GCP	PLR		M	RR				4					SALEABLE		N/A	N/A	N/A	N/A
KEY B, LIGHT GRAY, W/O CPA	160127-5027	B-LG	GCP	PLR		M	RR							7	8	SALEABLE		N/A	N/A	N/A	N/A
KEY A, BLACK, W/O CPA	160127-5028	A-BLK	GCP	PLR		M	RR	1	2	3	4			7	8	SALEABLE		N/A	N/A	N/A	N/A
KEY A, BLACK, W/O CPA	160127-5029	A-BLK	GCP	PLR		M	RR			3	4				8	SALEABLE		N/A	N/A	N/A	N/A
KEY A, BLACK, W/O CPA	160127-5030	A-BLK	GCP	PLR		M	RR	1	2	3	4	5		7		SALEABLE		N/A	N/A	N/A	N/A
KEY A, BLACK, W/O CPA	160127-5031	A-BLK	GCP	PLR		M	RR					5				SALEABLE		N/A	N/A	N/A	N/A
KEY A, BLACK, W/O CPA	160127-5032	A-BLK	GCP	PLR		M	RR		2			5				SALEABLE		N/A	N/A	N/A	N/A
KEY B, LIGHT GRAY, W/O CPA	160127-5033	B-LG	GCP	PLR		M	RR	1		3					8	SALEABLE		N/A	N/A	N/A	N/A
KEY B, LIGHT GRAY, W/O CPA	160127-5034	B-LG	GCP	PLR		M	RR			3					8	SALEABLE		N/A	N/A	N/A	N/A
KEY B, LIGHT GRAY, W/O CPA	160127-5035	B-LG	GCP	PLR		M	RR	1								SALEABLE		N/A	N/A	N/A	N/A
KEY A, BLACK, W/O CPA	160127-5036	A-BLK	GCP	PLR		M	RR	1							8	SALEABLE		N/A	N/A	N/A	N/A
KEY A, BLACK, W/O CPA	160127-5037	A-BLK	GCP	PLR		M	RR						6		8	SALEABLE		N/A	N/A	N/A	N/A
KEY A, BLACK, W/O CPA	160127-5038	A-BLK	GCP	PLR		M	RR	1			4	5	6	7	8	SALEABLE		N/A	N/A	N/A	N/A
KEY A, BLACK, W/O CPA	160127-5039	A-BLK	GCP	PLR		M	RR		2					7		SALEABLE		N/A	N/A	N/A	N/A
KEY B, LIGHT GRAY, W/O CPA	160127-5040	B-LG	GCP	PLR		M	RR					5		7		SALEABLE		N/A	N/A	N/A	N/A
KEY A, BLACK, W/O CPA	160127-5041	A-BLK	GCP	PLR		M	RR				4	5	6	7	8	SALEABLE		N/A	N/A	N/A	N/A
KEY A, BLACK, W/O CPA	160127-5042	A-BLK	GCP	PLR		M	RR					5			8	SALEABLE		N/A	N/A	N/A	N/A
KEY A, BLACK, W/O CPA	160127-5043	A-BLK	GCP	PLR		M	RR		2		4	5	6			SALEABLE		N/A	N/A	N/A	N/A
KEY A, BLACK, W/O CPA	160127-5044	A-BLK	GCP	PLR		M	RR	1	2	3	4		6	7		SALEABLE		N/A	N/A	N/A	N/A
KEY A, BLACK, W/O CPA	160127-5045	A-BLK	GCP	PLR		M	RR				4		6			SALEABLE		N/A	N/A	N/A	N/A
KEY A, BLACK, W/CPA	160127-5046	A-BLK	GCP	PLR	CPA	M	RR	1						7		SALEABLE		N/A	N/A	N/A	N/A
KEY B, LIGHT GRAY, W/O CPA	160127-5047	B-LG	GCP	PLR		M	RR					5				SALEABLE		N/A	N/A	N/A	N/A
KEY A, BLACK, W/O CPA	160127-5048	A-BLK	GCP	PLR		M	RR	1	2			5	6		8	SALEABLE		N/A	N/A	N/A	N/A
KEY A, BLACK, W/O CPA	160127-5049	A-BLK	GCP	PLR		M	RR	1	2						8	SALEABLE		N/A	N/A	N/A	N/A
KEY A, BLACK, W/O CPA	160127-5050	A-BLK	GCP	PLR		M	RR				4	5	6			SALEABLE		N/A	N/A	N/A	N/A
KEY A, BLACK, W/O CPA	160127-5051	A-BLK	GCP	PLR		M	RR	1	2	3			6			SALEABLE		N/A	N/A	N/A	N/A
KEY A, BLACK, W/O CPA	160127-5052	A-BLK	GCP	PLR		M	RR				4	5		7	8	SALEABLE		N/A	N/A	N/A	N/A
KEY A, BLACK, W/O CPA	160127-5053	A-BLK	GCP	PLR		M	RR			3	4			7	8	SALEABLE		N/A	N/A	N/A	N/A
KEY A, BLACK, W/O CPA	160127-5054	A-BLK	GCP	PLR		M	RR	1		3	4			7	8	SALEABLE		N/A	N/A	N/A	N/A
KEY A, BLACK, W/O CPA	160127-5055	A-BLK	GCP	PLR		M	RR				4				8	SALEABLE		N/A	N/A	N/A	N/A
KEY A, BLACK, W/O CPA	160127-5056	A-BLK	GCP	PLR		M	RR				4	5			8	SALEABLE		N/A	N/A	N/A	N/A
KEY A, BLACK, WITH CLIPSLOT, W/O CPA	160127-4901	A-BLK-CLIP	GCO	PLR		M	RR									SALEABLE		34951-0811	34951-0821	34951-0831	34951-0841
KEY B, LIGHT GRAY, WITH CLIPSLOT, W/O CPA	160127-4902	B-LG-CLIP	GCO	PLR		M	RR									SALEABLE		34951-0811	34951-0821	34951-0831	34951-0841
KEY C, BROWN, WITH CLIPSLOT, W/O CPA	160127-4903	C-BR-CLIP	GCO	PLR		M	RR									NOT AVAILABLE		34951-0811	34951-0821	34951-0831	34951-0841
KEY D, GREEN, WITH CLIPSLOT, W/O CPA	160127-4904	D-GR-CLIP	GCO	PLR		M	RR									NOT AVAILABLE		34951-0811	34951-0821	34951-0831	34951-0841
KEY D, BLACK, WITH CLIPSLOT, W/O CPA	160127-4905	D-BLK-CLIP	GCO	PLR		M	RR									NOT AVAILABLE		34951-0811	34951-0821	34951-0831	34951-0841
KEY A, BLACK, WITH CLIPSLOT, W/CPA	160127-4906	A-BLK-CLIP	GCO	PLR	CPA	M	RR									SALEABLE		34951-0811	34951-0821	34951-0831	34951-0841
KEY B, LIGHT GRAY, WITH CLIPSLOT, W/CPA	160127-4907	B-LG-CLIP	GCO	PLR	CPA	M	RR									SALEABLE		34951-0811	34951-0821	34951-0831	34951-0841
KEY C, BROWN, WITH CLIPSLOT, W/CPA	160127-4908	C-BR-CLIP	GCO	PLR	CPA	M	RR									NOT AVAILABLE		34951-0811	34951-0821	34951-0831	34951-0841
KEY D, GREEN, WITH CLIPSLOT, W/CPA	160127-4909	D-GR-CLIP	GCO	PLR	CPA	M	RR									NOT AVAILABLE		34951-0811	34951-0821	34951-0831	34951-0841
KEY A, BLACK, WITH CLIPSLOT, W/O CPA	160127-4910	A-BLK-CLIP	GCP	PLR		M	RR				4					SALEABLE		34951-0811	34951-0821	34951-0831	34951-0841
KEY A, BLACK, WITH CLIPSLOT, W/O CPA	160127-4920	A-BLK-CLIP	GCP	PLR		M	RR				4				8	SALEABLE		34951-0811	34951-0821	34951-0831	34951-0841
KEY A, BLACK, WITH CLIPSLOT, W/O CPA	160127-4921	A-BLK-CLIP	GCP	PLR		M	RR								8	SALEABLE		34951-0811	34951-0821	34951-0831	34951-0841
KEY C, DARK GRAY, WITH CLIPSLOT, W/O CPA	160127-4922	C-DG-CLIP	GCO	PLR		M	RR									SALEABLE		34951-0811	34951-0821	34951-0831	34951-0841
KEY D, STONE GRAY, WITH CLIPSLOT, W/O CPA	160127-4923	D-SG-CLIP	GCO	PLR		M	RR									SALEABLE		34951-0811	34951-0821	34951-0831	34951-0841
KEY C, DARK GRAY, WITH CLIPSLOT, W/CPA	160127-4924	C-DG-CLIP	GCO	PLR	CPA	M	RR									SALEABLE		34951-0811	34951-0821	34951-0831	34951-0841
KEY D, STONE GRAY, WITH CLIPSLOT, W/CPA	160127-4925	D-SG-CLIP	GCO	PLR	CPA	M	RR									SALEABLE		34951-0811	34951-0821	34951-0831	34951-0841
KEY B, LIGHT GRAY, WITH CLIPSLOT, W/O CPA	160127-4926	B-LG-CLIP	GCP	PLR		M	RR				4				8	SALEABLE		34951-0811	34951-0821	34951-0831	34951-0841
KEY A, BLACK, WITH CLIPSLOT, W/CPA	160127-4927	A-BLK-CLIP	GCP	PLR	CPA	M	RR				4				8	SALEABLE		34951-0811	34951-0821	34951-0831	34951-0841
KEY B, LIGHT GRAY, WITH CLIPSLOT, W/CPA	160127-4928	B-LG-CLIP	GCP	PLR	CPA	M	RR				4				8	SALEABLE		34951-0811	34951-0821	34951-0831	34951-0841
KEY A, BLACK, WITH CLIPSLOT, W/O CPA	160127-4929	A-BLK-CLIP	GCP	PLR		M	RR				4	5		7	8	SALEABLE		34951-0811	34951-0821	34951-0831	34951-0841
KEY A, BLACK, WITH CLIPSLOT, W/O CPA	160127-4930	A-BLK-CLIP	GCP	PLR		M	RR		2	3	4	5		7	8	SALEABLE		34951-0811	34951-0821	34951-0831	34951-0841
KEY A, BLACK, WITH CLIPSLOT, W/O CPA	160127-4931	A-BLK-CLIP	GCP	PLR		M	RR	1	2	3			6			SALEABLE		34951-0811	34951-0821	34951-0831	34951-0841
KEY A, BLACK, WITH CLIPSLOT, W/O CPA	160127-4932	A-BLK-CLIP	GCP	PLR		M	RR	1					6			SALEABLE		34951-0811	34951-0821	34951-0831	34951-0841
KEY A, BLACK, WITH CLIPSLOT, W/CPA	160127-4933	A-BLK-CLIP	GCP	PLR	CPA	M	RR								8	SALEABLE		34951-0811	34951-0821	34951-0831	34951-0841
KEY B, LIGHT GRAY, WITH CLIPSLOT, W/CPA	160127-4934	B-LG-CLIP	GCP	PLR	CPA	M	RR								8	SALEABLE		34951-0811	34951-0821	34951-0831	34951-0841
KEY A, BLACK, WITH CLIPSLOT, W/CPA	160127-4935	A-BLK-CLIP	GCP	PLR	CPA	M	RR		2	3	4		6	7	8	SALEABLE		34951-0811	34951-0821	34951-0831	34951-0841
KEY A, BLACK, WITH CLIPSLOT, W/O CPA	160127-4936	A-BLK-CLIP	GCP	PLR		M	RR						6	7	8	SALEABLE		34951-0811	34951-0821	34951-0831	34951-0841
KEY A, BLACK, WITH CLIPSLOT, W/O CPA	160127-4937	A-BLK-CLIP	GCP	PLR		M	RR					5			8	SALEABLE		34951-0811	34951-0821	34951-0831	34951-0841
KEY A, BLACK, WITH CLIPSLOT, W/O CPA	160127-4938	A-BLK-CLIP	GCP	PLR		M	RR					5				SALEABLE		34951-0811	34951-0821	34951-0831	34951-0841
KEY A, BLACK, WITH CLIPSLOT, W/O CPA	160127-4939	A-BLK-CLIP	GCP	PLR		M	RR				4	5	6	7	8	SALEABLE		34951-0811	34951-0821	34951-0831	34951-0841
KEY A, BLACK, WITH CLIPSLOT, W/O CPA	160127-4940	A-BLK-CLIP	GCP	PLR		M	RR	1	2			5	6			SALEABLE		34951-0811	34951-0821	34951-0831	34951-0841
KEY A, BLACK, WITH CLIPSLOT, W/O CPA	160127-4941	A-BLK-CLIP	GCP	PLR		M	RR	1	2	3	4	5	6			SALEABLE		34951-0811	34951-0821	34951-0831	34951-0841
KEY A, BLACK, WITH CLIPSLOT, W/O CPA	160127-4942	A-BLK-CLIP	GCP	PLR		M	RR				4	5	6			SALEABLE		34951-0811	34951-0821	34951-0831	34951-0841

molex

MX150 GEN 2 RECEPTACLE 2X6 SEALED ASSEMBLY MAT SEAL
BOM AND PIN OUT SHEET

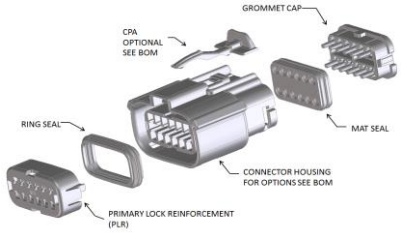



ABBREVIATION	DESCRIPTION	COLOR	MATERIAL
A-BLK	HOUSING KEYING OPTION A	BLACK	SPS/NYLON GF20
B-LG	HOUSING KEYING OPTION B	LIGHT GRAY	SPS/NYLON GF20
C-DG	HOUSING KEYING OPTION C	DARK GRAY	SPS/NYLON GF20
D-SG	HOUSING KEYING OPTION D	STONE GRAY	SPS/NYLON GF20
A-BLK-CLIP	HOUSING KEYING OPTION A WITH CLIPSLOT	BLACK	SPS/NYLON GF20
B-LG-CLIP	HOUSING KEYING OPTION B WITH CLIPSLOT	LIGHT GRAY	SPS/NYLON GF20
C-DG-CLIP	HOUSING KEYING OPTION C WITH CLIPSLOT	DARK GRAY	SPS/NYLON GF20
D-SG-CLIP	HOUSING KEYING OPTION D WITH CLIPSLOT	STONE GRAY	SPS/NYLON GF20
GCP	GROMMET CAP (PLUGGED)	BLACK	SPS/NYLON GF20
PLR	PLR	NATURAL	SPS/NYLON GF20
CPA	CPA	RED	PBT GF20
M	MAT SEAL	LIGHT BLUE	INHERENTLY LUBRICATED SILICONE
R	RING SEAL	GREEN	INHERENTLY LUBRICATED SILICONE

FOR ADDITIONAL INFORMATION SEE E-160008-0001
SD-160008-0001

ASSEMBLY DESCRIPTION	ASSEMBLY PART NUMBER	COMPONENT						BLOCKED TERMINALS												STATUS	COMMENTS	OPTIONAL ATTATCHMENTS SOLD SEPERATELY	
		THE PRESENCE OF AN ABBREVIATION INDICATES THE PRESENCE OF THAT COMPONENT.						CAVITY WITH A NUMBER INDICATES BLOCKED TERMINAL POSITION CAVITY WITHOUT A NUMBER INDICATES OPEN TERMINAL POSITION															
		HOUSING KEY/COLOR	GROMMET CAP	PLR	CPA	MAT SEAL	RING SEAL	1	2	3	4	5	6	7	8	9	10	11	12			BACKSHELL WITH RIBS	BACKSHELL WITHOUT RIBS
NOT CURRENTLY AVAILIBLE	160008-6005																			NOT AVAILIBLE		34951-1210	34951-1220
NOT CURRENTLY AVAILIBLE	160008-6006																			NOT AVAILIBLE		34951-1210	34951-1220
NOT CURRENTLY AVAILIBLE	160008-6011																			NOT AVAILIBLE		34951-1210	34951-1220
NOT CURRENTLY AVAILIBLE	160008-6012																			NOT AVAILIBLE		34951-1210	34951-1220
NOT CURRENTLY AVAILIBLE	160008-6017																			NOT AVAILIBLE		34951-1210	34951-1220
NOT CURRENTLY AVAILIBLE	160008-6018																			NOT AVAILIBLE		34951-1210	34951-1220
NOT CURRENTLY AVAILIBLE	160008-6023																			NOT AVAILIBLE		34951-1210	34951-1220
NOT CURRENTLY AVAILIBLE	160008-6024																			NOT AVAILIBLE		34951-1210	34951-1220
NOT CURRENTLY AVAILIBLE	160008-6029																			NOT AVAILIBLE		N/A	N/A
NOT CURRENTLY AVAILIBLE	160008-6030																			NOT AVAILIBLE		N/A	N/A
NOT CURRENTLY AVAILIBLE	160008-6035																			NOT AVAILIBLE		N/A	N/A
NOT CURRENTLY AVAILIBLE	160008-6036																			NOT AVAILIBLE		N/A	N/A
NOT CURRENTLY AVAILIBLE	160008-6041																			NOT AVAILIBLE		N/A	N/A
NOT CURRENTLY AVAILIBLE	160008-6042																			NOT AVAILIBLE		N/A	N/A
NOT CURRENTLY AVAILIBLE	160008-6047			PLR		M	R													NOT AVAILIBLE		N/A	N/A
NOT CURRENTLY AVAILIBLE	160008-6048			PLR		M	R													NOT AVAILIBLE		N/A	N/A
KEY A, BLACK, W/O CPA	160127-6001	A-BLK	GCP	PLR		M	R													DESIGN CONCEPT		34951-1210	34951-1220
KEY B, LIGHT GRAY, W/O CPA	160127-6002	B-LG	GCP	PLR		M	R													DESIGN CONCEPT		34951-1210	34951-1220
KEY C, DARK GRAY, W/O CPA	160127-6003	C-DG	GCP	PLR		M	R													DESIGN CONCEPT		34951-1210	34951-1220
KEY D, STONE GRAY, W/O CPA	160127-6004	D-SG	GCP	PLR		M	R													DESIGN CONCEPT		34951-1210	34951-1220

molex

MX150 GEN 2 RECEPTACLE 2X10 SEALED ASSEMBLY MAT SEAL
BOM AND PIN OUT SHEET

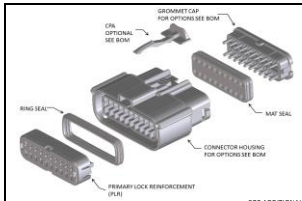

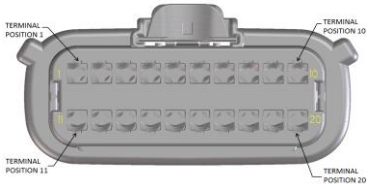

FOR ADDITIONAL INFORMATION SEE E-160008-0001
SD-160008-0001

ABBREVIATION	DESCRIPTION	COLOR	MATERIAL
A-BLK	HOUSING KEYING OPTION A	BLACK	SPS/NYLON GF20
B-LG	HOUSING KEYING OPTION B	LIGHT GRAY	SPS/NYLON GF20
C-DG	HOUSING KEYING OPTION C	DARK GRAY	SPS/NYLON GF20
D-SG	HOUSING KEYING OPTION D	STONE GRAY	SPS/NYLON GF20
A-BLK-CLIP	HOUSING KEYING OPTION A WITH CLIPSLOT	BLACK	SPS/NYLON GF20
B-LG-CLIP	HOUSING KEYING OPTION B WITH CLIPSLOT	LIGHT GRAY	SPS/NYLON GF20
C-DG-CLIP	HOUSING KEYING OPTION C WITH CLIPSLOT	DARK GRAY	SPS/NYLON GF20
D-SG-CLIP	HOUSING KEYING OPTION D WITH CLIPSLOT	STONE GRAY	SPS/NYLON GF20
GCP	GROMMET CAP (PLUGGED)	BLACK	SPS/NYLON GF20
GCO	GROMMET CAP (OPEN)	BLACK	SPS/NYLON GF20
PLR	PLR	NATURAL	SPS/NYLON GF20
CPA	CPA	RED	PBT GF20
M	MAT SEAL	LIGHT BLUE	INHERENTLY LUBRICATED SILICONE
R	RING SEAL	GREEN	INHERENTLY LUBRICATED SILICONE

ASSEMBLY DESCRIPTION	ASSEMBLY PART NUMBER	COMPONENT						BLOCKED TERMINALS																		STATUS	COMMENTS	OPTIONAL ATTATCHMENTS SOLD SEPERATELY			
		THE PRESENCE OF AN ABBREVIATION INDICATES THE PRESENCE OF THAT COMPONENT.						CAVITY WITH A NUMBER INDICATES BLOCKED TERMINAL POSITION CAVITY WITHOUT A NUMBER INDICATES OPEN TERMINAL POSITION																							
		HOUSING KEY/COLOR	GROMMET CAP	PLR	CPA	MAT SEAL	RING SEAL	1	2	3	4	5	6	7	8	9	10	11	12	13	14	15	16	17	18	19	20			BACKSHELL WITH RIBS	BACKSHELL WITHOUT RIBS	90° ADAPTOR WITH RIBS	90° ADAPTOR WITHOUT RIBS
NOT CURRENTLY AVAILIBLE	160008-0005																									NOT AVAILIBLE		N/A	N/A	N/A	N/A
NOT CURRENTLY AVAILIBLE	160008-0006																									NOT AVAILIBLE		N/A	N/A	N/A	N/A
NOT CURRENTLY AVAILIBLE	160008-0011																									NOT AVAILIBLE		N/A	N/A	N/A	N/A
NOT CURRENTLY AVAILIBLE	160008-0012																									NOT AVAILIBLE		N/A	N/A	N/A	N/A
NOT CURRENTLY AVAILIBLE	160008-0017																									NOT AVAILIBLE		N/A	N/A	N/A	N/A
NOT CURRENTLY AVAILIBLE	160008-0018																									NOT AVAILIBLE		N/A	N/A	N/A	N/A
NOT CURRENTLY AVAILIBLE	160008-0023																									NOT AVAILIBLE		N/A	N/A	N/A	N/A
NOT CURRENTLY AVAILIBLE	160008-0024																									NOT AVAILIBLE		N/A	N/A	N/A	N/A
NOT CURRENTLY AVAILIBLE	160008-0029																									NOT AVAILIBLE		N/A	N/A	N/A	N/A
NOT CURRENTLY AVAILIBLE	160008-0030																									NOT AVAILIBLE		N/A	N/A	N/A	N/A
NOT CURRENTLY AVAILIBLE	160008-0035																									NOT AVAILIBLE		N/A	N/A	N/A	N/A
NOT CURRENTLY AVAILIBLE	160008-0036																									NOT AVAILIBLE		N/A	N/A	N/A	N/A
NOT CURRENTLY AVAILIBLE	160008-0041																									NOT AVAILIBLE		N/A	N/A	N/A	N/A
NOT CURRENTLY AVAILIBLE	160008-0042																									NOT AVAILIBLE		N/A	N/A	N/A	N/A
NOT CURRENTLY AVAILIBLE	160008-0047			PLR		M	R																			NOT AVAILIBLE		N/A	N/A	N/A	N/A
NOT CURRENTLY AVAILIBLE	160008-0048			PLR		M	R																			NOT AVAILIBLE		N/A	N/A	N/A	N/A
KEY A, BLACK, W/O CPA	160127-2001	A-BLK	GCO	PLR		M	R																			SALEABLE		N/A	N/A	N/A	N/A
KEY B, LIGHT GRAY, W/O CPA	160127-2002	B-LG	GCO	PLR		M	R																			SALEABLE		N/A	N/A	N/A	N/A
KEY C, BROWN, W/O CPA	160127-2003	C-BR	GCO	PLR		M	R																			NOT RECOMMENDED	SEE 33472-2060	N/A	N/A	N/A	N/A
KEY D, GREEN, W/O CPA	160127-2004	D-GR	GCO	PLR		M	R																			NOT RECOMMENDED	SEE 33472-2061	N/A	N/A	N/A	N/A
KEY A, BLACK, W/CPA	160127-2006	A-BLK	GCO	PLR	CPA	M	R																			SALEABLE		N/A	N/A	N/A	N/A
KEY B, LIGHT GRAY, W/CPA	160127-2007	B-LG	GCO	PLR	CPA	M	R																			SALEABLE		N/A	N/A	N/A	N/A
KEY C, BROWN, W/CPA	160127-2008	C-BR	GCO	PLR	CPA	M	R																			NOT RECOMMENDED	SEE 33472-2062	N/A	N/A	N/A	N/A
KEY D, GREEN, W/CPA	160127-2009	D-GR	GCO	PLR	CPA	M	R																			NOT RECOMMENDED	SEE 33472-2063	N/A	N/A	N/A	N/A
KEY C, DARK GRAY, W/O CPA	160127-2060	C-DG	GCO	PLR		M	R																			SALEABLE		N/A	N/A	N/A	N/A
KEY D, STONE GRAY, W/O CPA	160127-2061	D-SG	GCO	PLR		M	R																			SALEABLE		N/A	N/A	N/A	N/A
KEY A, YELLOW, W/CPA	160127-2089	A-YW	GCO	PLR	CPA	M	R																			SALEABLE		N/A	N/A	N/A	N/A
KEY A, YELLOW, W/O CPA	160127-2093	A-YW	GCO	PLR		M	R																			SALEABLE		N/A	N/A	N/A	N/A

TABLE OF CONTENTS

SHEET NO.	SHEET DESCRIPTION
1	NOTES AND BOM
2	CONFIGURATIONS
3-4	KEY CONFIGURATIONS
5	RECEPTACLE CONNECTOR ASSEMBLY
6	BACKSHELL NOTES
7	BACKSHELL
8	BACKSHELL CONFIGURATIONS
9	2X10 CONNECTOR INTERFACE DEFINITION

NOTES: VALID UNLESS OTHERWISE SPECIFIED

1. GENERAL:
a. APPLICATION SPECIFICATION SEE: AS-33472-100
-CONTAINS: PRODUCT INTRODUCTION, PRODUCT SUMMARY, CONNECTOR ASSEMBLY, PACKAGING INFORMATION, CONNECTOR MATING, SERVICE INSTRUCTIONS, ELECTRICAL CONTINUITY CHECKING, CRIMPING, AND TROUBLESHOOTING.
-DESIGNED TO MATE WITH DEVICE OR CONNECTOR AS SPECIFIED IN THE MATING INTERFACE/CONNECTOR DRAWINGS CHART.
*DENOTES DRAWINGS THAT CAN BE ACCESSED AT <http://ewcap.uscarteams.org/>.
-ASSEMBLY SHIPPED WITH PLR IN PRE-LOCK POSITION (SEE PLR PRE-LOCK VIEW SHEET 5).
b. PRODUCT SPECIFICATION SEE:
-STANDARD CONFIGURATION (STD): PS-33472-000
-TRANSMISSION CONFIGURATION (TRNS):
CONTAINS SILICONE: TS-160038-0001
SILICONE FREE: TBD
-UL V0 CONFIGURATION (UL V0): TBD
CONTAINS: PRODUCT INTRODUCTION, PRODUCT SUMMARY, RATINGS (CURRENT, TEMPERATURE, SEALING, AND FLAMMABILITY), TERMINALS, WIRE DIAMETER RANGE, PRODUCT VALIDATION, AND PRODUCT DEVIATIONS.
c. PACKAGING SPECIFICATION PER MOLEX DRAWING: SEE PACKAGING CHART
d. PARTS MUST BE IN COMPLIANCE TO MOLEX CHEMICAL SUBSTANCES FOR PRODUCTS AND PACKAGING SPECIFICATION: QEHS-699000-301
e. DATA MUST BE SUBMITTED UNDER THE MOLEX PART NUMBER TO IMDS (COMPANY ID#13255)

2. DESIGN - MATERIALS:
a. FOR BILL OF MATERIALS SEE:
-STANDARD CONFIGURATION SD-33472-0002
-TRANSMISSION CONGURATION
CONTAINS SILICONE: SD-160038-0002
SILICONE FREE: SD-160092-0002
-UL V0 CONFIGURATION SD-160074-0002
b. TRANSMISSION CONNECTOR COMPONENTS MUST MEET THE MATERIAL REQUIREMENTS SPECIFIED IN TS-160038-0001 & TBD

3. DESIGN - GEOMETRY:
a. THE 3-D CAD DATA IS BASIC (WITHOUT TOLERANCE) AND MASTER FOR THIS PART WITH THE EXCEPTION OF UNDERLINED DIMENSIONS. DIMENSIONAL INFORMATION NOT SHOWN ON THIS DRAWING IS DEFINED BY THE DATA FILE AT ITS LATEST REVISION.
b. GEOMETRIC DIMENSIONS AND TOLERANCES PER ASME Y14.5M-2009
c. EDGES AND UNDIMENSIONED DETAILS PER ISO13715
d. CORNERS SHOWN AS SHARP TO BE R 0.2 MAX.
e. LETTERING SHALL BE 0.15 MAX RAISED IN 0.25 MAX RECESS PAD. THIS INCLUDES RECYCLING CODE, CAVITY ID, VENDOR IDENTIFICATION, AND CUSTOMER MATERIAL NUMBER.
f. VISUAL DEFECTS SHALL MEET COSMETIC STANDARD PS-45499-002 (Class B).
g. LASER MARKING:
1. PART NUMBER
2. DAY OF THE YEAR
3. SHIFT
4. YEAR
FOR ADDITIONAL INFORMATION SEE SECTION 5 UNDER PROCEDURES IN ES-34735-008.
B h. 2X2 CLIP-SLOT DESIGN IS BASED ON USCAR/EWCAP 7mm CLIP SLOT EWCAP - 005 - 7
2X3 THRU 2X10 CLIP-SLOT DESIGN IS BASED ON USCAR/EWCAP 11mm CLIP SLOT EWCAP - 005 - 11

DESCRIPTION	DRAWING NO.
2X2	PK-31300-635
2X3	PK-31300-903
2X4	PK-31300-903
2X6	PK-31300-903
2X8	PK-31300-903
2X10	PK-31300-903

MATING INTERFACE/CONNECTOR DRAWINGS

DESCRIPTION	INTERFACE DEFINITION	MOLEX INLINE
STANDARD 2X2	*150-S-004-2-Z02	SD-33482-0001
UL V0 2X2	*150-S-004-2-Z02	SD-33482-0001
STANDARD 2X3	*150-S-006-2-Z02	SD-33482-0001
TRANSMISSION 2X3	*150-S-006-2-Z02	N/A
STANDARD 2X4	*150-S-008-2-Z02	SD-33482-0001
UL V0 2X4	*150-S-008-2-Z02	SD-33482-0001
STANDARD 2X6	*150-S-012-2-Z01	SD-33482-0001
UL V0 2X6	*150-S-012-2-Z01	SD-33482-0001
STANDARD 2X8	*150-S-016-2-Z01	SD-33482-0001
STANDARD 2X10	SD-33472-0001	SD-33482-0001
UL V0 2X10	SD-33472-0001	SD-33482-0001

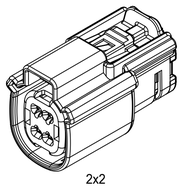
2x2

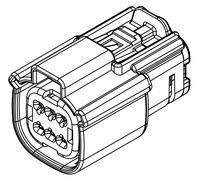
2x3

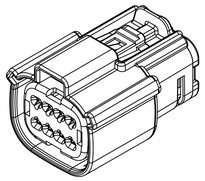
2x4

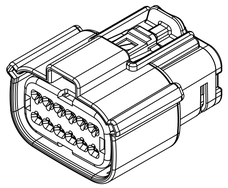
2x6

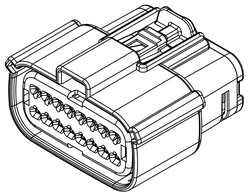
2x8

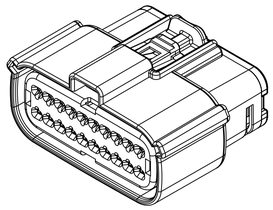
2x10

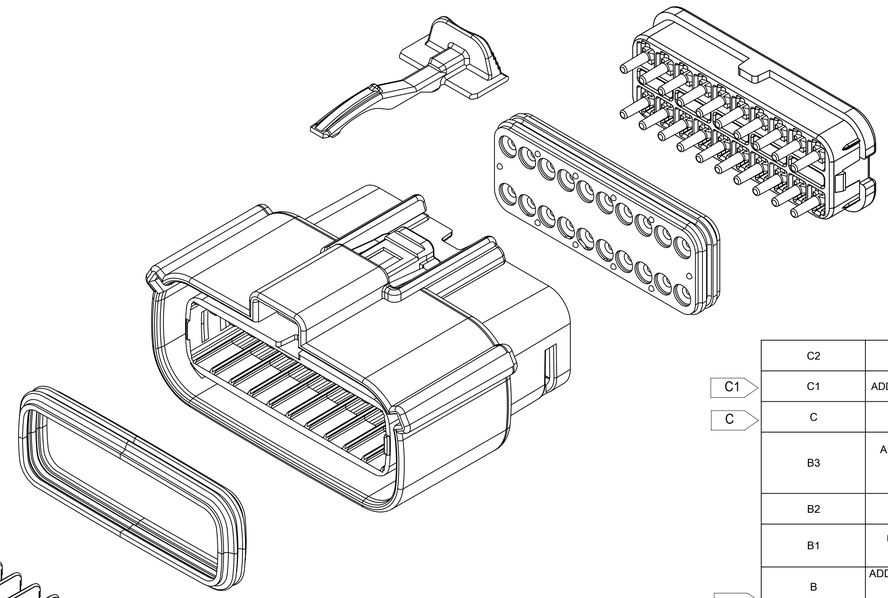

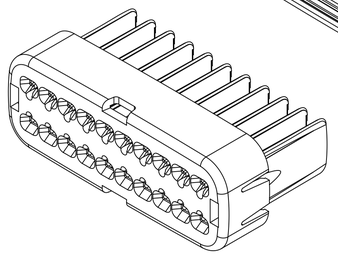

REV	REV DESCRIPTION
C2	ADDED MOLEX BACKSHELL DETAILS
C1	ADDED 2X6-TRNS.-WITH/WITHOUT CLIPSLOT *
C	ADDED 2X10-STD.-WITH CLIPSLOT *
B3	ADD ROW FOR 2X6 V0 ON SHEET 5DIM3# UPDATE TO 25.0 MAX FOR V0DIM11# UPDATE TO 33.85 MAX FOR V0
B2	ADD 2X6 UL V0 CONFIGURATIONS
B1	UPDATE 2X6 W/O CLIPSLOT DIM G ON TABLE OF SHEET 5
B	ADDED 2X2 - STD- WITH CLIPSLOT, 2X8 - STD- WITH CLIPSLOT AND NOTE h
A11	MINOR GEOMETRY CHANGE FOR UL V0
A10	UPDATED 2X4 DRAWING NUMBER
A9	UPDATED 2X10 PART NUMBERS
A8	UPDATED 2X3 DRAWING NUMBER
A7	UPDATED 2X10 INTERFACE
A6	ADDED TRANSMISSION REFERENCES
A5	ADD 2X10 INTERFACE SHEETS
A4	ADD UL V0 CONFIGURATIONS
A3	ADDED 2X3 STD AND TRANSMISSION
A2	UPDATED 2X8 BLD DRAWINGS
A1	FIXED TYPO IN NOTE 1a, UPDATED 2X6 MOLEX INLINE BLADE DRAWING
A	INITIAL RELEASE

C1 C C B B

INSPECTION NUMBER LOG
LAST NUMBER: 11
ADDED: 11
REMOVED:

DOCUMENT STATUS	P1	RELEASE DATE	2018/02/16 22:02:25

THIS DRAWING CONTAINS INFORMATION THAT IS PROPRIETARY TO MOLEX ELECTRONIC TECHNOLOGIES, LLC AND SHOULD NOT BE USED WITHOUT WRITTEN PERMISSION

SYMBOLS
E = 0
F = 0
F = 0
S = 0
= 0
C = 0
= 0
= 0
V = 0

DIMENSION UNITS	SCALE
mm	1:1

GENERAL TOLERANCES (UNLESS SPECIFIED)

ANGULAR TOL	±	1.0 °
4 PLACES	±	
3 PLACES	±	
2 PLACES	±	0.1
1 PLACE	±	0.2
0 PLACES	±	

DRAFT WHERE APPLICABLE MUST REMAIN WITHIN DIMENSIONS

CURRENT REV DESC:

EC NO: 171650
DRWN: DDEB 2018/01/19
CHK'D: MVANSLAMBROU 2018/02/16
APPR: MVANSLAMBROU 2018/02/16

INITIAL REVISION:
DRWN: APROFFITT 2014/05/14
APPR: VKOSHY 2014/06/27

THIRD ANGLE PROJECTION | DRAWING: A1-SIZE | SERIES: 33472

molex

MX150 RCPT
DUAL ROW SEALED ASSEMBLY MAT SEAL

PRODUCT CUSTOMER DRAWING

DOCUMENT NUMBER	DOC TYPE	DOC PART	REVISION
SD-33472-0001	PSD	001	C2

MATERIAL NUMBER	CUSTOMER	SHEET NUMBER
	GENERAL MARKET	1 OF 11

SHEET DESCRIPTION

CONFIGURATIONS

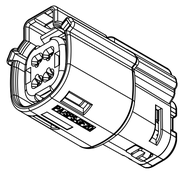

2X2 - STD.
2X2 - TRNS. - SILICONE FREE †

B

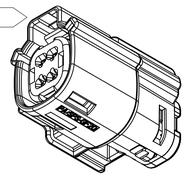

2X2 - STD. - WITH CLIPSLOT *

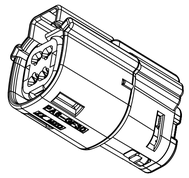

† 2X2 - UL V0

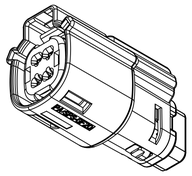

2X2 - STD. - LENGTHENED

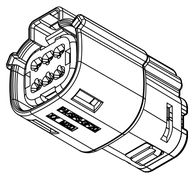

2X3 - STD.
2X3 - TRNS. - CONTAINS SILICONE †

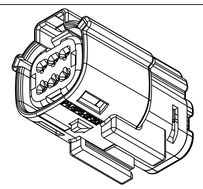

2X3 - STD. - WITH CLIPSLOT *

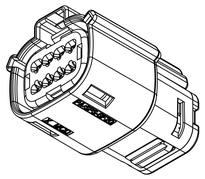

2X4 - STD.

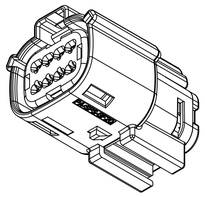

2X4 - STD. - WITH CLIPSLOT *

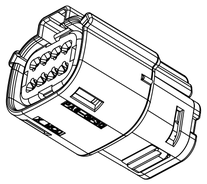

† 2X4 - UL V0

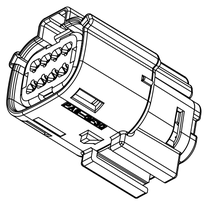

† 2X4 - UL V0-WITH CLIPSLOT*

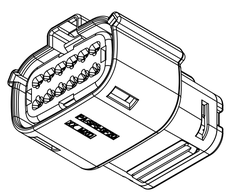

2X6 - STD.
C1 † 2X6 - TRNS.

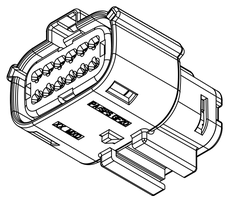

2X6 - STD. - WITH CLIPSLOT *
C1 † 2X6 - TRNS. - WITH CLIPSLOT *

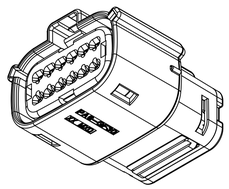

† 2X6 - UL V0

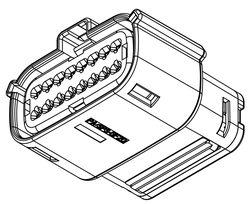

2X8 - STD.

B

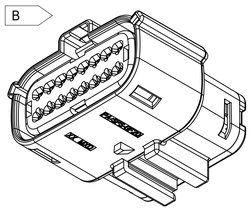

2X8 - STD. - WITH CLIPSLOT *

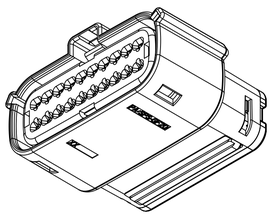

2X10 - STD.

C

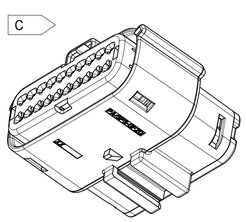

2X10 - STD. - WITH CLIPSLOT *

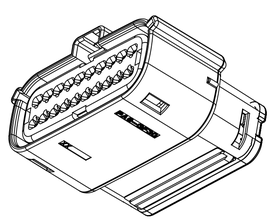

† 2X10 - UL V0

* WITH CLIPSLOT CONFIGURATION DOES NOT
MEET THE USCAR PACKAGING FRAME REQUIREMENTS
† MINOR GEOMETRY DIFFERENCE THAN STANDARD CONFIGURATION
SEE NOTES 1a & 2a-b FOR MORE INFORMATION

DOCUMENT STATUS	P1	RELEASE DATE	2018/02/16	22:02:25

SYMBOLS	
A =	0
C =	0
F =	0
S =	0
▼ =	0
▽ =	0
☒ =	0
■ =	0
V =	0

THIS DRAWING CONTAINS INFORMATION THAT IS PROPRIETARY TO MOLEX ELECTRONIC TECHNOLOGIES, LLC AND SHOULD NOT BE USED WITHOUT WRITTEN PERMISSION

DIMENSION UNITS	SCALE
mm	1:1

GENERAL TOLERANCES (UNLESS SPECIFIED)

ANGULAR TOL	±	1.0 °
4 PLACES	±	
3 PLACES	±	
2 PLACES	±	0.1
1 PLACE	±	0.2
0 PLACES	±	

DRAFT WHERE APPLICABLE MUST REMAIN WITHIN DIMENSIONS

CURRENT REV DESC:

EC NO: 171650
DRWN: DDEB 2018/01/19
CHK'D: MVANSLAMBROU 2018/02/16
APPR: MVANSLAMBROU 2018/02/16

INITIAL REVISION:
DRWN: APROFFITT 2014/05/14
APPR: VKOSHY 2014/06/27

THIRD ANGLE PROJECTION	DRAWING	SERIES
	A1-SIZE	33472

molex

MX150 RCPT
DUAL ROW SEALED ASSEMBLY MAT SEAL

PRODUCT CUSTOMER DRAWING

DOCUMENT NUMBER	DOC TYPE	DOC PART	REVISION
SD-33472-0001	PSD	001	C2

MATERIAL NUMBER	CUSTOMER	SHEET NUMBER
	GENERAL MARKET	2 OF 11

SHEET DESCRIPTION

KEY CONFIGURATIONS

2X2

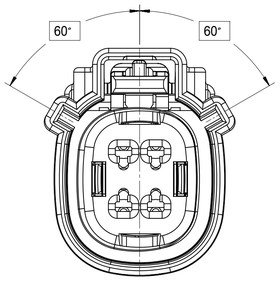

KEY A

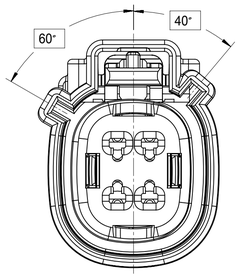

KEY B

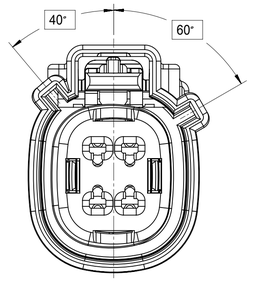

KEY C

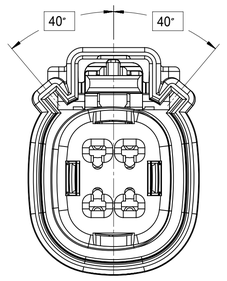

KEY D

2X3

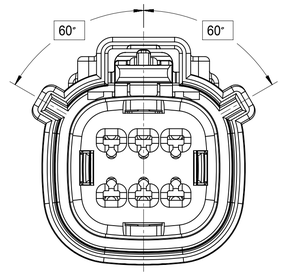

KEY A

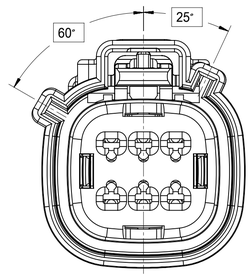

KEY B

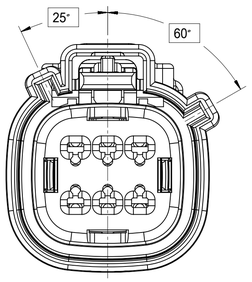

KEY C

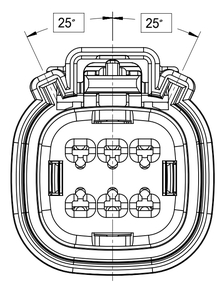

KEY D

2X4

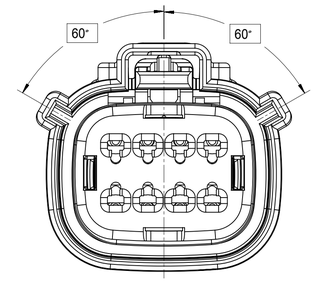

KEY A

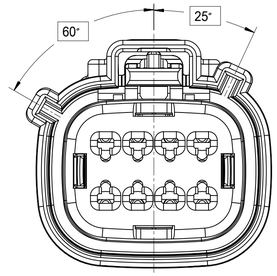

KEY B

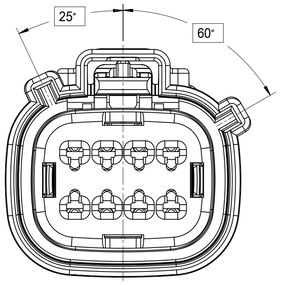

KEY C

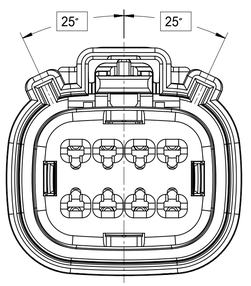

KEY D

SYMBOLS	
A	= 0
C	= 0
F	= 0
S	= 0
	= 0
C	= 0
	= 0
	= 0
V	= 0

THIS DRAWING CONTAINS INFORMATION THAT IS PROPRIETARY TO MOLEX ELECTRONIC TECHNOLOGIES, LLC AND SHOULD NOT BE USED WITHOUT WRITTEN PERMISSION

DIMENSION UNITS	SCALE
mm	1:1

GENERAL TOLERANCES (UNLESS SPECIFIED)

ANGULAR TOL	±	1.0 °
4 PLACES	±	
3 PLACES	±	
2 PLACES	±	0.1
1 PLACE	±	0.2
0 PLACES	±	

DRAFT WHERE APPLICABLE MUST REMAIN WITHIN DIMENSIONS

CURRENT REV DESC:

EC NO: 171650

DRWN:	DDEB	2018/01/19
CHK'D:	MVANSLAMBROU	2018/02/16
APPR:	MVANSLAMBROU	2018/02/16

INITIAL REVISION:

DRWN:	APROFFITT	2014/05/14
APPR:	VKOSHY	2014/06/27

THIRD ANGLE PROJECTION | DRAWING: A1-SIZE | SERIES: 33472

molex

MX150 RCPT
DUAL ROW SEALED ASSEMBLY MAT SEAL

PRODUCT CUSTOMER DRAWING

DOCUMENT NUMBER	DOC TYPE	DOC PART	REVISION
SD-33472-0001	PSD	001	C2

MATERIAL NUMBER	CUSTOMER	SHEET NUMBER
	GENERAL MARKET	3 OF 11

DOCUMENT STATUS	P1	RELEASE DATE	2018/02/16 22:02:25

TEMPLATE - creates 4th point A1+
ASYMETRIC.tpl
DATE: 2017/10/08

SHEET DESCRIPTION

KEY CONFIGURATIONS CONT.

2X6

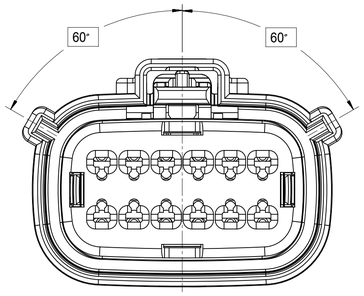

KEY A

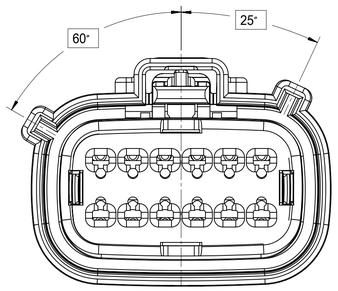

KEY B

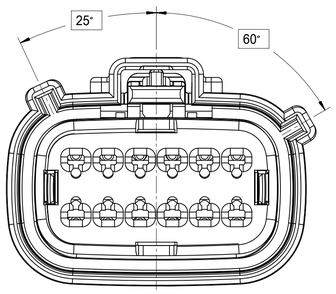

KEY C

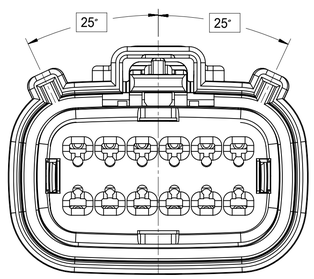

KEY D

2X8

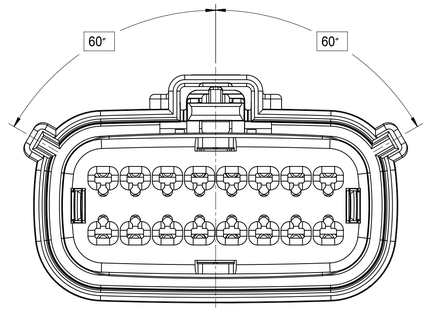

KEY A

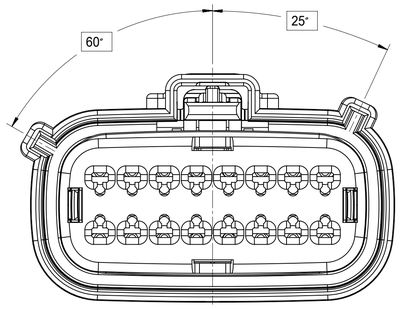

KEY B

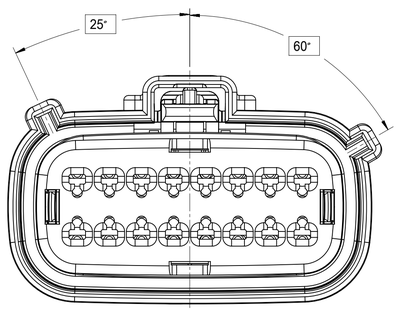

KEY C

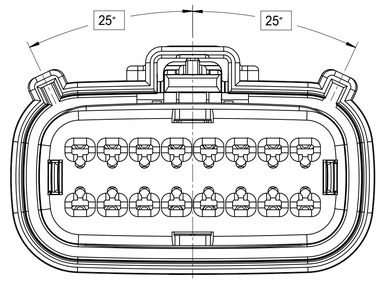

KEY D

2X10

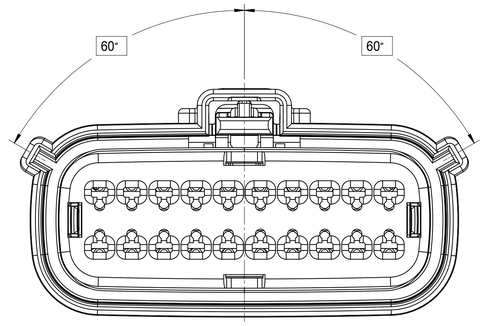

KEY A

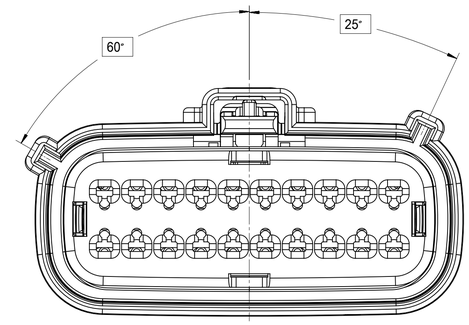

KEY B

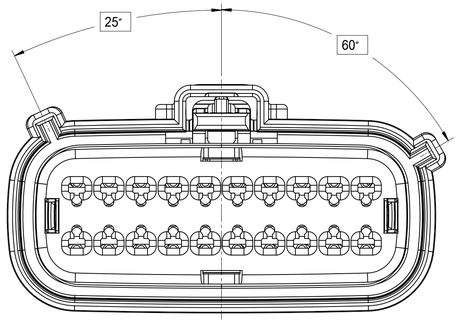

KEY C

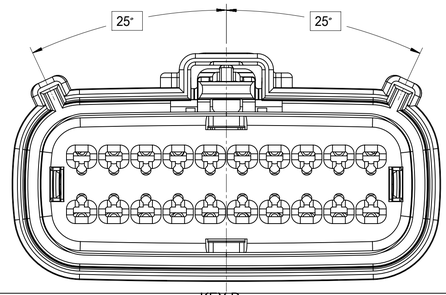

KEY D

THIS DRAWING CONTAINS INFORMATION THAT IS PROPRIETARY TO MOLEX ELECTRONIC TECHNOLOGIES, LLC AND SHOULD NOT BE USED WITHOUT WRITTEN PERMISSION

SYMBOLS	
A =	0
C =	0
F =	0
S =	0
=	0
C =	0
=	0
=	0
V =	0

DIMENSION UNITS	SCALE
mm	1:1

GENERAL TOLERANCES (UNLESS SPECIFIED)

ANGULAR TOL	±	1.0 °
4 PLACES	±	
3 PLACES	±	
2 PLACES	±	0.1
1 PLACE	±	0.2
0 PLACES	±	

DRAFT WHERE APPLICABLE MUST REMAIN WITHIN DIMENSIONS

CURRENT REV DESC:

EC NO: 171650

DRWN:	DDEB	2018/01/19
CHK'D:	MVANSLAMBROU	2018/02/16
APPR:	MVANSLAMBROU	2018/02/16

INITIAL REVISION:

DRWN:	APROFFITT	2014/05/14
APPR:	VKOSHY	2014/06/27

THIRD ANGLE PROJECTION

molex

MX150 RCPT
DUAL ROW SEALED ASSEMBLY MAT SEAL

PRODUCT CUSTOMER DRAWING

DOCUMENT NUMBER	DOC TYPE	DOC PART	REVISION
SD-33472-0001	PSD	001	C2

DRAWING	SERIES	MATERIAL NUMBER	CUSTOMER	SHEET NUMBER
A1-SIZE	33472		GENERAL MARKET	4 OF 11

DOCUMENT STATUS	P1	RELEASE DATE	2018/02/16 22:02:25

SHEET DESCRIPTION

RECEPTACLE CONNECTOR ASSEMBLY

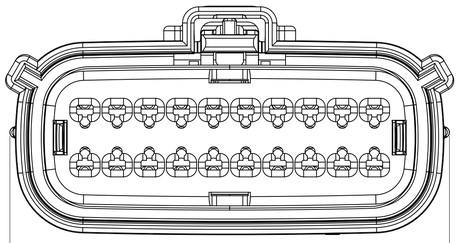

*DIM J MAX.
* APPLIES TO UL-V0 CONFIGURATIONS ONLY
(11)

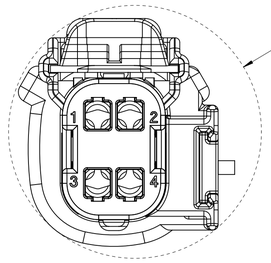

ØDIM C
MIN PASS-THRU
WITH NO CLEARANCE

B APPLIES TO 2X2 - STD. - WITH CLIPSLOT ONLY

CHARTED DIMENSIONS

DESCRIPTION	DIMENSIONS							
	A	B	C	D	E	F	G	J
2X2 W/O CLIPSLOT	18.58	1.75	25.45	24.81	37.65	N/A	2.75±0.50	
2X2 W/ CLIPSLOT	18.58	1.75	27.65	24.81	37.65	N/A	2.75±0.50	
2X2 LENGTHENED	18.58	1.75	25.45	24.81	42.25	N/A	2.75±0.50	20.04
2X3 W/ CLIPSLOT	22.25	3.5	30.50	N/A	37.65	27.96	4.0±0.4	
2X3 W/O CLIPSLOT	22.25	3.5	26.24	24.90	37.65	N/A	4.0±0.4	
2X4 W/ CLIPSLOT	25.75	1.75	31.50	N/A	37.65	28.00	2.75±0.50	27.04
2X4 W/O CLIPSLOT	25.75	1.75	29.19	24.81	37.65	N/A	2.75±0.50	27.04
2X6 W/ CLIPSLOT	32.75	1.75	35.58	N/A	37.65	27.76	2.75±0.50	
2X6 W/O CLIPSLOT	32.75	1.75	35.58	24.90	37.65	N/A	2.75±0.50	32.95
2X6 W/O CLIPSLOT V0	32.75	1.75	35.58	25.0	37.65	N/A	2.75±0.50	33.85
2X8 W/O CLIPSLOT	39.80	1.75	42.25	24.90	37.65	N/A	4.0±0.4	
2X8 W/ CLIPSLOT	39.80	1.75	42.25	N/A	37.65	27.80	4.0±0.4	
2X10 W/O CLIPSLOT	46.75	1.75	49.95	24.90	37.65	N/A	2.75±0.50	48.04
2X10 W/ CLIPSLOT	46.75	1.75	49.95	N/A	37.65	27.80	2.75±0.50	

LASER MARKING ON THIS SURFACE
SEE NOTE 3g.

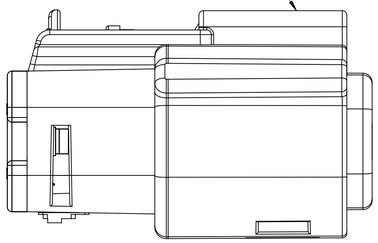

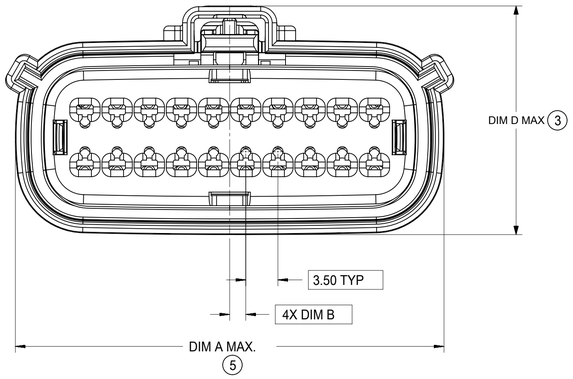

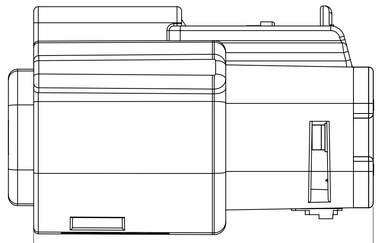

DIM E MAX
(1)

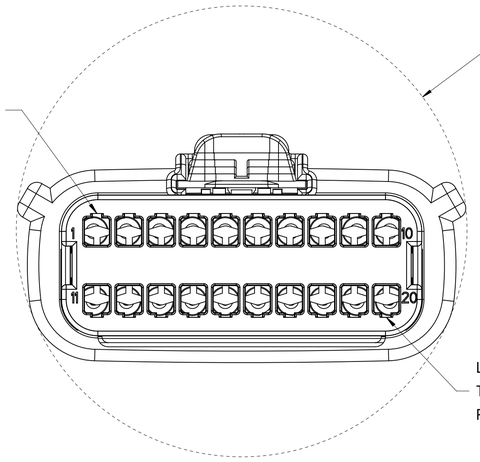

REAR VIEW
(WIRE HARNESS SIDE)

MOLD CAVITY I.D.
THIS LOCATION

MANUFACTURING LOCATION
CODE THIS LOCATION

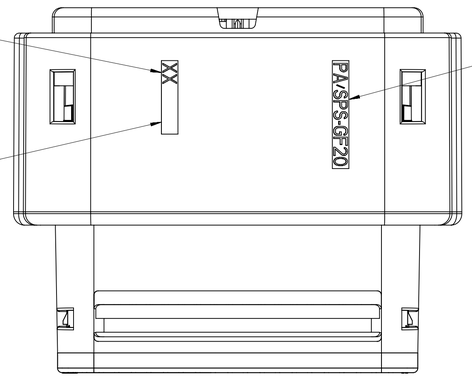

RECYCLE CODE
THIS LOCATION

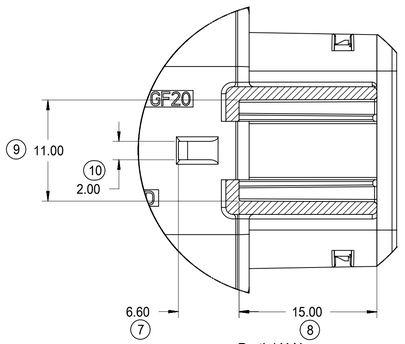

Partial X-X
SCALE 3:1

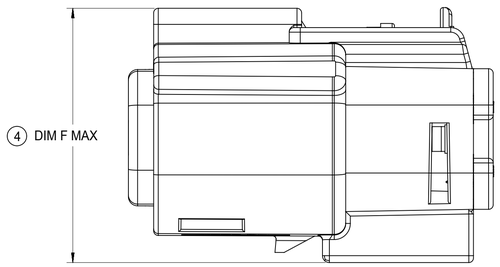

DIM G
(6)

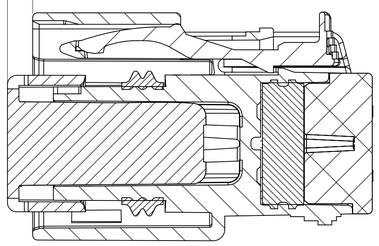

PRIMARY LOCK REINFORCEMENT (PLR) SHOWN
IN PRE-STAGED POSITION

SECTION Y-Y

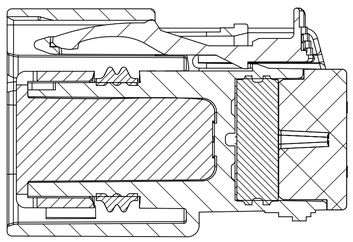

PRIMARY LOCK REINFORCEMENT (PLR) SHOWN
IN FINAL-LOCK POSITION

SECTION Z-Z

DOCUMENT STATUS	P1	RELEASE DATE	2018/02/16 22:02:25

SYMBOLS	
A = 0	
B = 0	
C = 0	
D = 0	
E = 0	
F = 0	
G = 0	
H = 0	

THIS DRAWING CONTAINS INFORMATION THAT IS PROPRIETARY TO MOLEX ELECTRONIC TECHNOLOGIES, LLC AND SHOULD NOT BE USED WITHOUT WRITTEN PERMISSION

DIMENSION UNITS	SCALE
mm	1:1

GENERAL TOLERANCES (UNLESS SPECIFIED)

ANGULAR TOL	±	1.0 °
4 PLACES	±	
3 PLACES	±	
2 PLACES	±	0.1
1 PLACE	±	0.2
0 PLACES	±	

DRAFT WHERE APPLICABLE MUST REMAIN WITHIN DIMENSIONS

CURRENT REV DESC:

EC NO: 171650
DRWN: DDEB 2018/01/19
CHK'D: MVANSLAMBROU 2018/02/16
APPR: MVANSLAMBROU 2018/02/16

INITIAL REVISION:
DRWN: APROFFITT 2014/05/14
APPR: VKOSHY 2014/06/27

THIRD ANGLE PROJECTION | DRAWING: A1-SIZE | SERIES: 33472

molex

MX150 RCPT
DUAL ROW SEALED ASSEMBLY MAT SEAL

PRODUCT CUSTOMER DRAWING

DOCUMENT NUMBER	DOC TYPE	DOC PART	REVISION
SD-33472-0001	PSD	001	C2

MATERIAL NUMBER	CUSTOMER	SHEET NUMBER
	GENERAL MARKET	5 OF 11

SHEET DESCRIPTION
BACKSHELL NOTES

BACKSHELL NOTES: VALID UNLESS OTHERWISE SPECIFIED

1. GENERAL:

a. APPLICATION SPECIFICATION SEE: AS-34951-001

-DESIGNED TO MATE WITH RECEPTACLE SEALED ASSEMBLY
SPECIFIED IN MOLEX DRAWING SD-33472-0001.

-SYSTEM TO BE USED WITH WIRE WITHIN DIAMETER RANGE OF 1.2mm TO 2.69mm.

-COMPONENTS ARE OPTIONAL AND MUST BE PURCHASED SEPERATELY.

-DESIGN IS OWNED BY SCHLEMMER FOR SCHLEMMER BACKSHELL.

-DESIGN IS OWNED BY MOLEX FOR MOLEX BACKSHELL.

-90° ADAPTOR DESIGN IS OWNED BY MOLEX.

-FOR ADDITIONAL INFORMATION SEE THE BACKSHELL COMPONENT DRAWING SD-34951-0001.

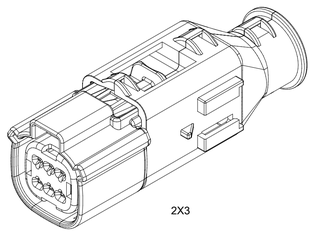

2X3

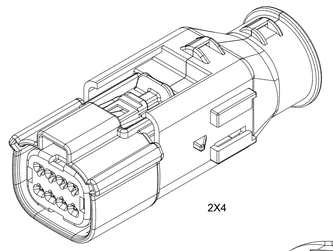

2X4

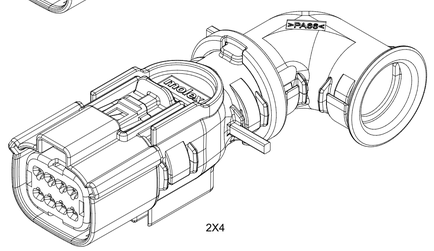

2X4

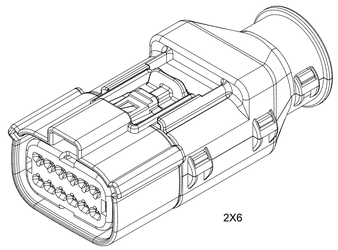

2X6

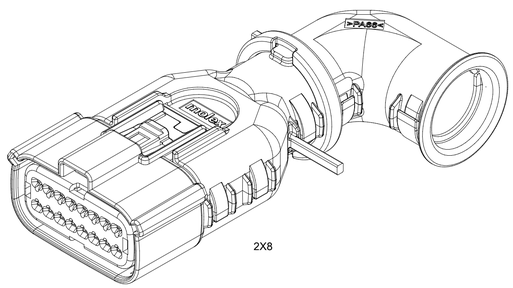

2X8

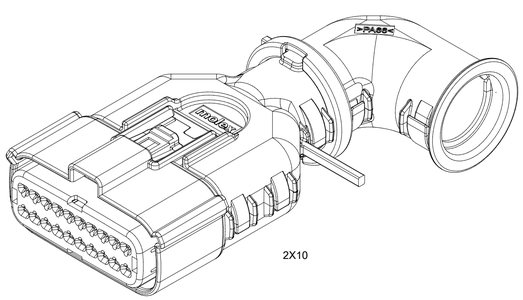

2X10

BACKSHELL CUSTOMER
MODEL NUMBER LEGEND

34951-XXXX

CUSTOMER MODEL COMPONENTS
- 0 - SCHLEMMER BACKSHELL ONLY
- 1 - SCHLEMMER BACKSHELL & MX150 HOUSING KEY A ASSEMBLY
- 2 - SCHLEMMER BACKSHELL & MX150 HOUSING KEY B ASSEMBLY
- 3 - SCHLEMMER BACKSHELL & MX150 HOUSING KEY C ASSEMBLY
- 4 - SCHLEMMER BACKSHELL & MX150 HOUSING KEY D ASSEMBLY
- 5 - MOLEX BACKSHELL ONLY
- 6 - MOLEX BACKSHELL & MX150 HOUSING KEY A ASSEMBLY
- 7 - MOLEX BACKSHELL & MX150 HOUSING KEY B ASSEMBLY
- 8 - MOLEX BACKSHELL & MX150 HOUSING KEY C ASSEMBLY
- 9 - MOLEX BACKSHELL & MX150 HOUSING KEY D ASSEMBLY

BACKSHELL FEATURES
- 1 - WITH RIBS
- 2 - WITHOUT RIBS
- 3 - 90° ADAPTOR

MX150 CIRCUIT SIZE 04, 06, 08, 12, 16, 20

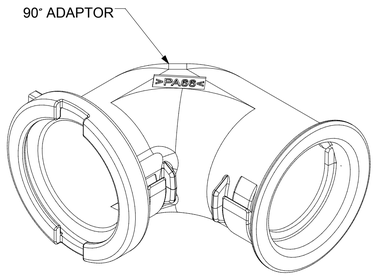

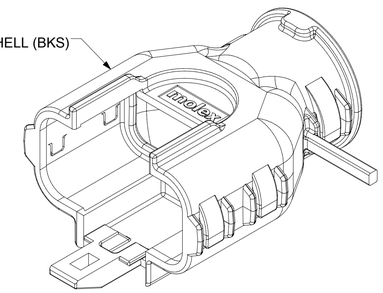

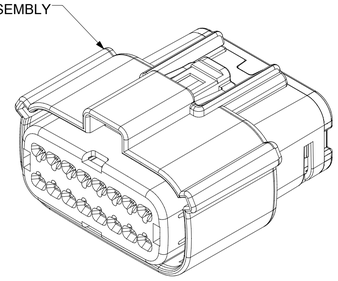

SCALE 2:1

DOCUMENT STATUS	P1	RELEASE DATE	2018/02/16 22:02:25

SYMBOLS	THIS DRAWING CONTAINS INFORMATION THAT IS PROPRIETARY TO MOLEX ELECTRONIC TECHNOLOGIES, LLC AND SHOULD NOT BE USED WITHOUT WRITTEN PERMISSION				
A = 0	DIMENSION UNITS: mm	SCALE: 1.5:1	CURRENT REV DESC:	molex	
C = 0	GENERAL TOLERANCES (UNLESS SPECIFIED)			MX150 RCPT DUAL ROW SEALED ASSEMBLY MAT SEAL	
F = 0	ANGULAR TOL ± 1.0 °		EC NO: 171650		
S = 0	4 PLACES ±		DRWN: DDEB 2018/01/19	PRODUCT CUSTOMER DRAWING	
= 0	3 PLACES ±		CHK'D: MVANSLAMBROU 2018/02/16		
C = 0	2 PLACES ± 0.1		APPR: MVANSLAMBROU 2018/02/16	DOCUMENT NUMBER: SD-33472-0001	DOC TYPE: PSD / DOC PART: 001 / REVISION: C2
= 0	1 PLACE ± 0.2		INITIAL REVISION:		
= 0	0 PLACES ±		DRWN: APROFFITT 2014/05/14		
= 0	DRAFT WHERE APPLICABLE MUST REMAIN WITHIN DIMENSIONS		APPR: VKOSHY 2014/06/27		
V = 0	THIRD ANGLE PROJECTION	DRAWING: A1-SIZE	SERIES: 33472	MATERIAL NUMBER	CUSTOMER: GENERAL MARKET / SHEET NUMBER: 6 OF 11

SHEET DESCRIPTION
SCHLEMMER BACKSHELL

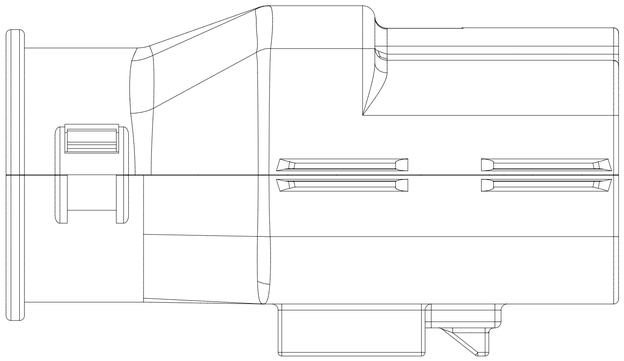

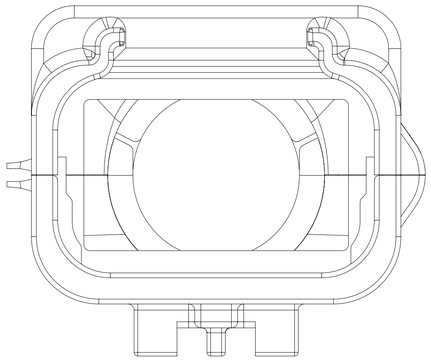

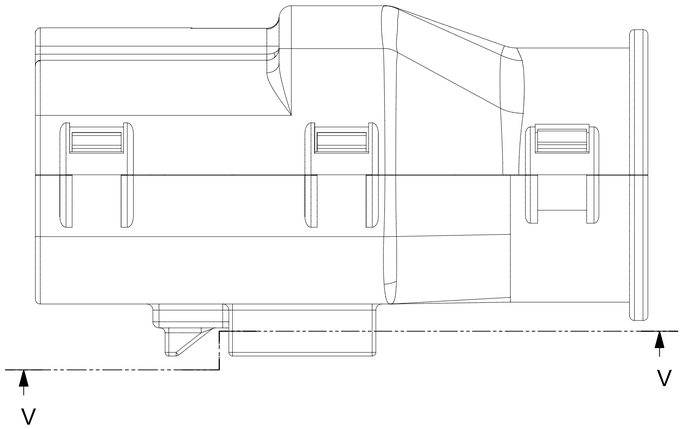

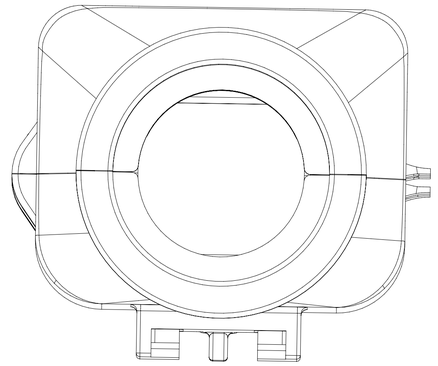

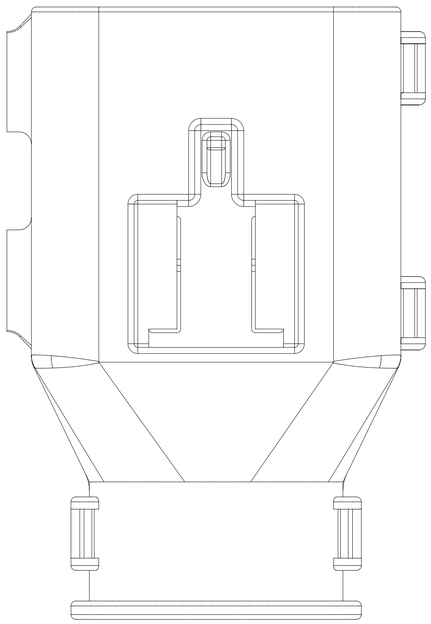

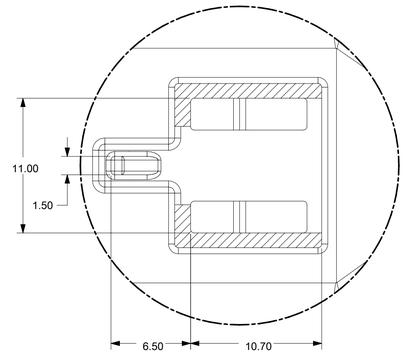

Partial V-V
SCALE 4:1

SYMBOLS	THIS DRAWING CONTAINS INFORMATION THAT IS PROPRIETARY TO MOLEX ELECTRONIC TECHNOLOGIES, LLC AND SHOULD NOT BE USED WITHOUT WRITTEN PERMISSION			
FA = 0	DIMENSION UNITS: mm	SCALE: 4:1	CURRENT REV DESC:	molex
EC = 0	GENERAL TOLERANCES (UNLESS SPECIFIED)			MX150 RCPT DUAL ROW SEALED ASSEMBLY MAT SEAL
EP = 0	ANGULAR TOL ± 1.0 °		EC NO: 171650	
S = 0	4 PLACES ±		DRWN: DDEB 2018/01/19	PRODUCT CUSTOMER DRAWING
▼ = 0	3 PLACES ±		CHK'D: MVANSLAMBROU 2018/02/16	
C = 0	2 PLACES ± 0.1		APPR: MVANSLAMBROU 2018/02/16	DOCUMENT NUMBER: SD-33472-0001 / DOC TYPE: PSD / DOC PART: 001 / REVISION: C2
☒ = 0	1 PLACE ± 0.2		INITIAL REVISION:	
■ = 0	0 PLACES ±		DRWN: APROFFITT 2014/05/14	
V = 0	DRAFT WHERE APPLICABLE MUST REMAIN WITHIN DIMENSIONS		APPR: VKOSHY 2014/06/27	
	THIRD ANGLE PROJECTION	DRAWING: A1-SIZE	SERIES: 33472	MATERIAL NUMBER / CUSTOMER: GENERAL MARKET / SHEET NUMBER: 7 OF 11

DOCUMENT STATUS	P1	RELEASE DATE	2018/02/16 22:02:25

SHEET DESCRIPTION

MOLEX BACKSHELL

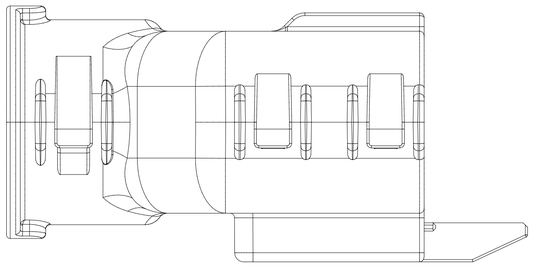

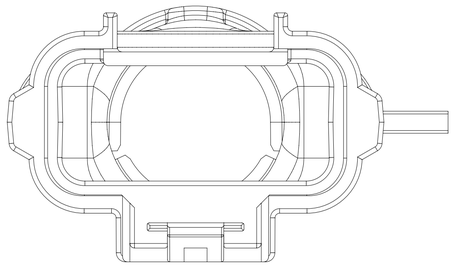

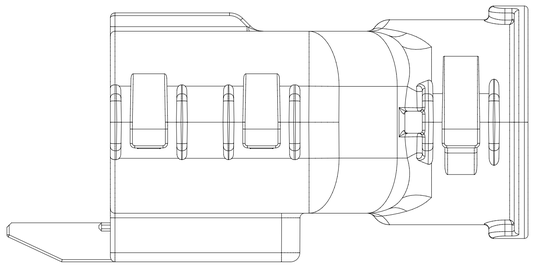

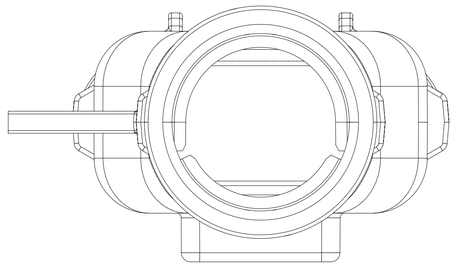

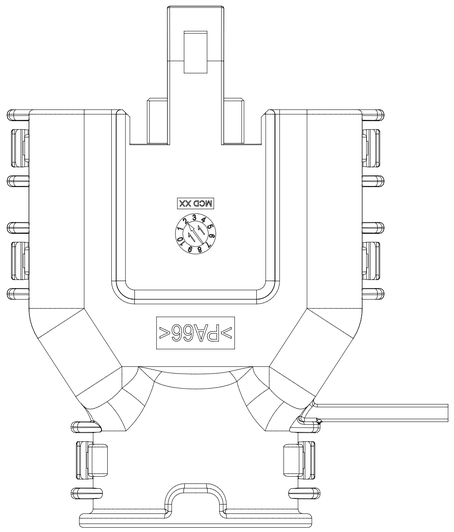

THIS DRAWING CONTAINS INFORMATION THAT IS PROPRIETARY TO MOLEX ELECTRONIC TECHNOLOGIES, LLC AND SHOULD NOT BE USED WITHOUT WRITTEN PERMISSION

SYMBOLS	DIMENSION UNITS	SCALE
= 0	mm	3:1

GENERAL TOLERANCES (UNLESS SPECIFIED)

ANGULAR TOL	±	1.0 °
4 PLACES	±	
3 PLACES	±	
2 PLACES	±	0.1
1 PLACE	±	0.2
0 PLACES	±	

DRAFT WHERE APPLICABLE MUST REMAIN WITHIN DIMENSIONS

CURRENT REV DESC:

EC NO: 171650

DRWN:	DDEB	2018/01/19
CHK'D:	MVANSLAMBROU	2018/02/16
APPR:	MVANSLAMBROU	2018/02/16

INITIAL REVISION:

DRWN:	APROFFITT	2014/05/14
APPR:	VKOSHY	2014/06/27

molex

MX150 RCPT
DUAL ROW SEALED ASSEMBLY MAT SEAL

PRODUCT CUSTOMER DRAWING

DOCUMENT NUMBER	DOC TYPE	DOC PART	REVISION
SD-33472-0001	PSD	001	C2

THIRD ANGLE PROJECTION	DRAWING	SERIES	MATERIAL NUMBER	CUSTOMER	SHEET NUMBER
	A1-SIZE	33472		GENERAL MARKET	8 OF 11

DOCUMENT STATUS	P1	RELEASE DATE	2018/02/16 22:02:25

FORMAT: master-tp-prod-A1-
dot-matrix_rx
DATE: 2017/10/06

SHEET DESCRIPTION
SCHLEMMER BACKSHELL CONFIGURATIONS

CHARTED DIMENSIONS	
DESCRIPTION	DIMENSIONS
	H
2X3 W/ CLIPSLOT	N/A
2X3 W/O CLIPSLOT	28.50
2X4 W/ CLIPSLOT	N/A
2X4 W/O CLIPSLOT	30.75
2X6 W/ CLIPSLOT	N/A
2X6 W/O CLIPSLOT	35.83

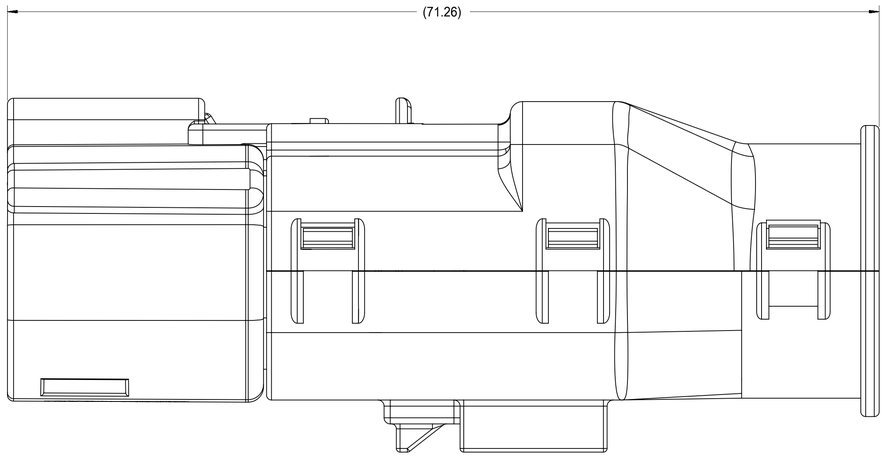

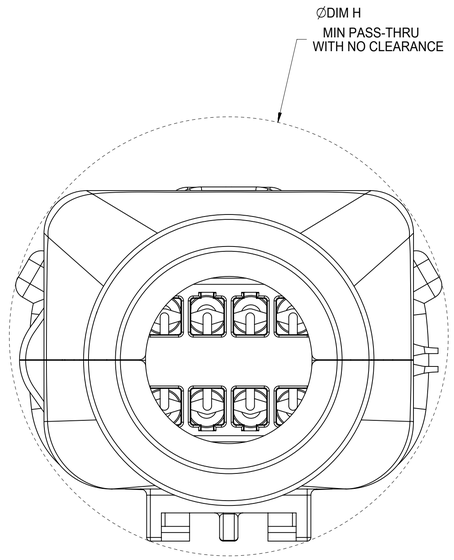

RECEPTACLE SEALED ASSEMBLY WITH RECEPTACLE BACKSHELL

QUALITY SYMBOLS
= 0
= 0
= 0
= 0
= 0
= 0
= 0
= 0

THIS DRAWING CONTAINS INFORMATION THAT IS PROPRIETARY TO MOLEX ELECTRONIC TECHNOLOGIES, LLC AND SHOULD NOT BE USED WITHOUT WRITTEN PERMISSION

EC NO: 171650 2018/01/19
DRWN: DDEB 2018/02/16
CHK'D: MVANSLAMBROU 2018/02/16
APPR: MVANSLAMBROU

GENERAL TOLERANCES (UNLESS SPECIFIED)

ANGULAR TOL	±	1.0 °
4 PLACES	±	
3 PLACES	±	
2 PLACES	±	0.1
1 PLACE	±	0.2
0 PLACES	±	

DRAFT WHERE APPLICABLE MUST REMAIN WITHIN DIMENSIONS

REV: C2

DIMENSION UNITS: mm
SCALE: 4:1
DRWN BY: APROFFITT DATE: 2014/05/14
CHK'D BY: KBORUSZEWSKI DATE: 2014/06/16
APPR BY: VKOSHY DATE: 2014/06/27
DRAWING SIZE: A1
THIRD ANGLE PROJECTION

molex®

MX150 RCPT
DUAL ROW SEALED ASSEMBLY MAT SEAL

PRODUCT CUSTOMER DRAWING

SERIES	MATERIAL NUMBER	CUSTOMER
33472		GENERAL MARKET

DOCUMENT NUMBER	DOC TYPE	DOC PART	SHEET NUMBER
SD-33472-0001	PSD	001	9 OF 11

RELEASE STATUS	P1	RELEASE DATE	2018/02/16 22:02:25

SHEET DESCRIPTION
MOLEX BACKSHELL CONFIGURATIONS

CHARTED DIMENSIONS				
DESCRIPTION	DIMENSIONS			
	J	K	L	M
2X2 W/O CLIPSLOT	TBD	TBD	TBD	TBD
B 2X2 W/ CLIP SLOT	TBD	TBD	TBD	TBD
2X2 LENGTHENED	TBD	TBD	TBD	TBD
2X4 W/ CLIPSLOT	58.39	32.85	32.10	44.26
2X4 W/O CLIPSLOT	N/A	N/A	N/A	N/A
2X8 W/ CLIPSLOT	67.19	42.65	36.10	56.49
B 2X8 W/O CLIPSLOT	N/A	N/A	N/A	N/A
2X10 W/ CLIPSLOT	67.19	42.65	36.10	56.49
C 2X10 W/O CLIPSLOT	N/A	N/A	N/A	N/A

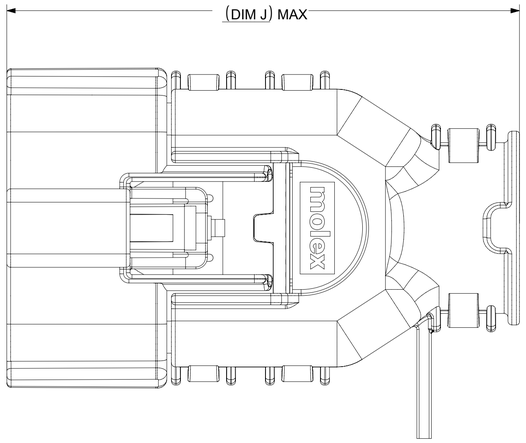

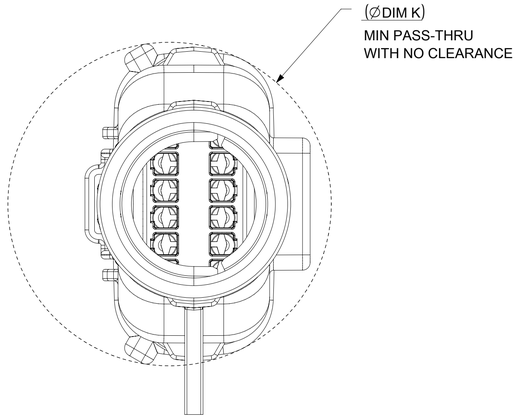

RECEPTACLE SEALED ASSEMBLY WITH RECEPTACLE BACKSHELL

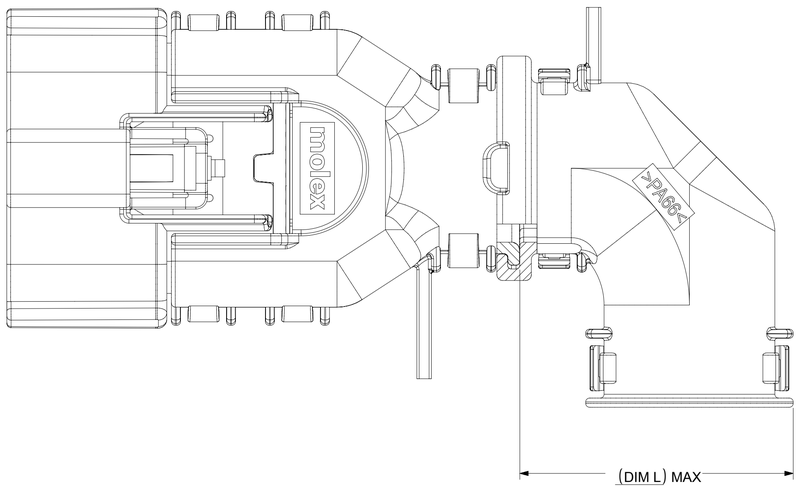

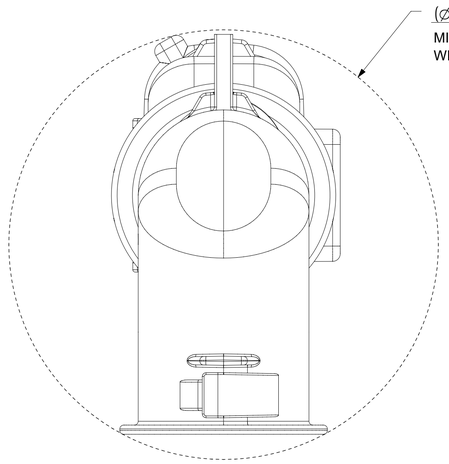

ADD THE VALUE OF 'L' TO THE TOTAL DIMENSION
WHENEVER ADAPTOR IS USED

DOCUMENT STATUS	P1	RELEASE DATE	2018/02/16 22:02:25

SYMBOLS
A = 0
E = 0
F = 0
S = 0
= 0
C = 0
= 0
= 0
V = 0

THIS DRAWING CONTAINS INFORMATION THAT IS PROPRIETARY TO MOLEX ELECTRONIC TECHNOLOGIES, LLC AND SHOULD NOT BE USED WITHOUT WRITTEN PERMISSION

DIMENSION UNITS	SCALE
mm	2.5:1

GENERAL TOLERANCES (UNLESS SPECIFIED)		
ANGULAR TOL	±	1.0 °
4 PLACES	±	
3 PLACES	±	
2 PLACES	±	0.1
1 PLACE	±	0.2
0 PLACES	±	

DRAFT WHERE APPLICABLE MUST REMAIN WITHIN DIMENSIONS

CURRENT REV DESC:

EC NO: 171650
DRWN: DDEB 2018/01/19
CHK'D: MVANSLAMBROU 2018/02/16
APPR: MVANSLAMBROU 2018/02/16

INITIAL REVISION:
DRWN: APROFFITT 2014/05/14
APPR: VKOSHY 2014/06/27

THIRD ANGLE PROJECTION | DRAWING: A1-SIZE | SERIES: 33472

molex

MX150 RCPT
DUAL ROW SEALED ASSEMBLY MAT SEAL

PRODUCT CUSTOMER DRAWING

DOCUMENT NUMBER	DOC TYPE	DOC PART	REVISION
SD-33472-0001	PSD	001	C2

MATERIAL NUMBER	CUSTOMER	SHEET NUMBER
	GENERAL MARKET	10 OF 11

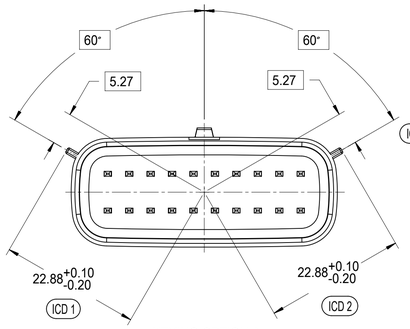

KEYING OPTION A
SCALE 4:1

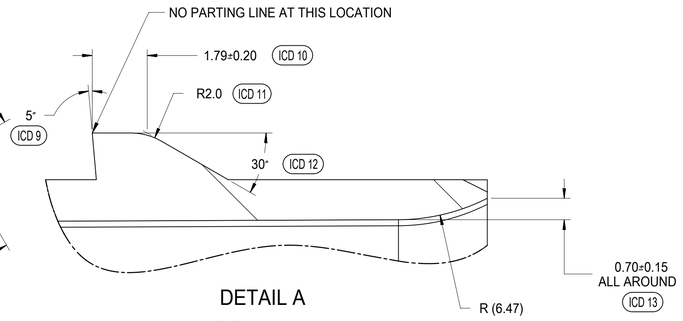

DETAIL A
SCALE 10:1

IF HEADER IS RECESSED INTO A POCKET, THESE DIMENSIONS REPRESENT
THE MINIMUM CLEARANCE REQUIRED FOR THE MATING CONNECTOR SHROUD

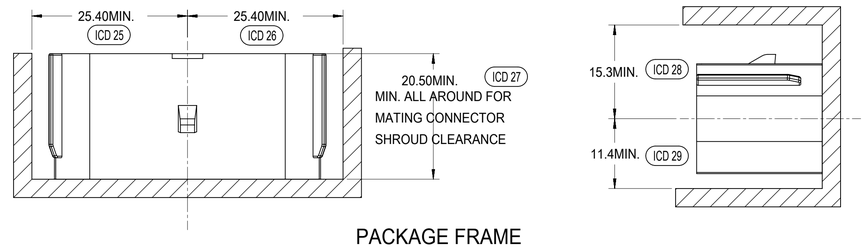

PACKAGE FRAME

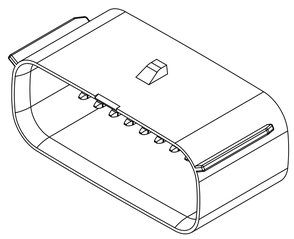

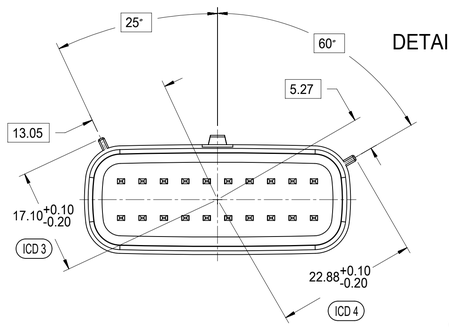

KEYING OPTION B
SCALE 4:1

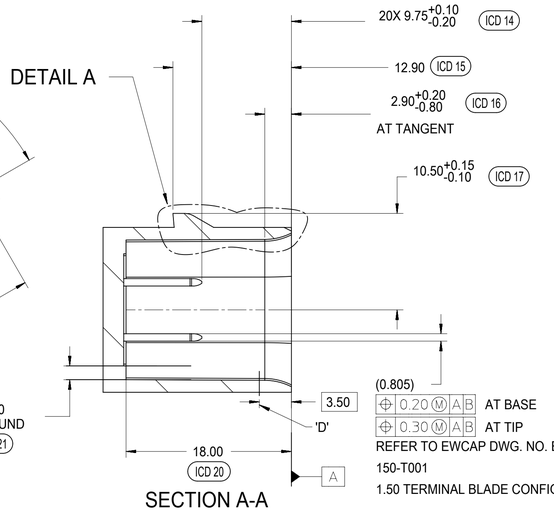

SECTION A-A

REFER TO EWCAP DWG. NO. EWCAP-001
150-T001
1.50 TERMINAL BLADE CONFIGURATION

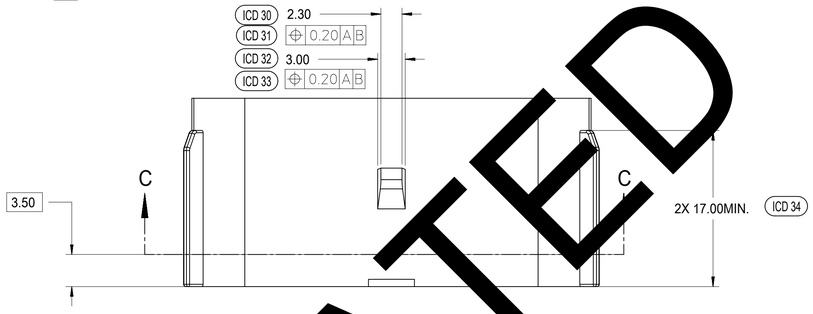

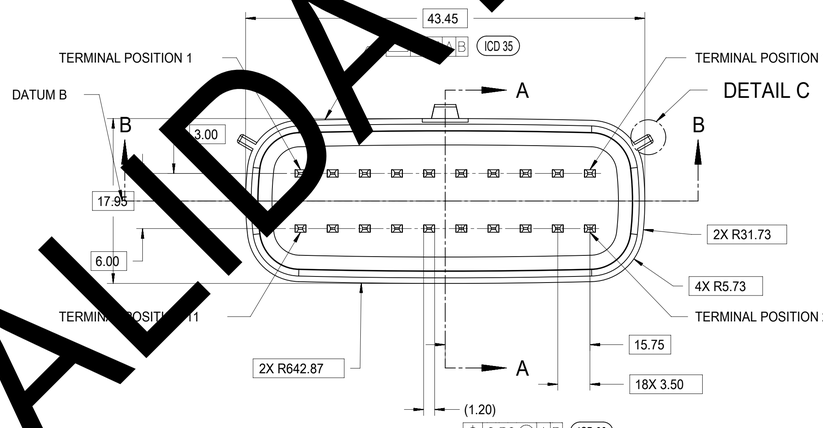

DETAIL C

REFER TO EWCAP DWG. NO. EWCAP-001
150-T001
1.50 TERMINAL BLADE CONFIGURATION

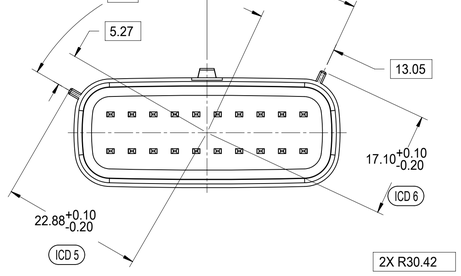

KEYING OPTION C
SCALE 4:1

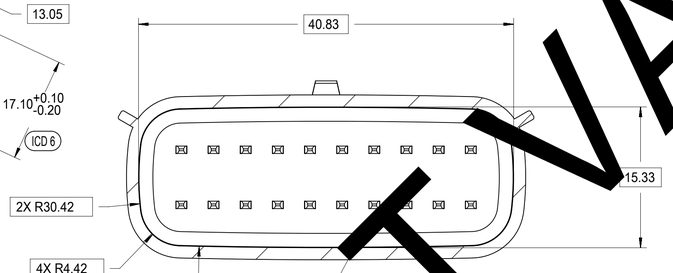

SECTION C-C

SURFACE MUST BE FREE
OF SURFACE DEFECTS AND
PARTING LINES FOR
SEALING ALL AROUND

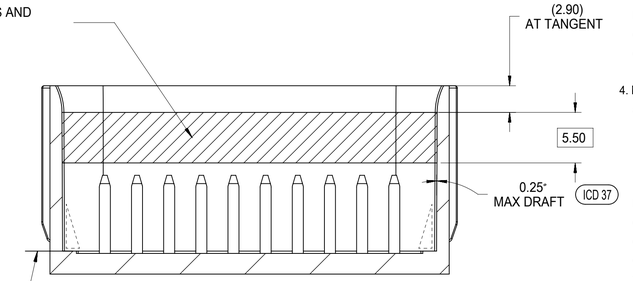

SECTION B-B

CONSTRUCTION BELOW THIS SURFACE IS
NOT CONTROLLED BY EWCAP. NO PLASTIC
FEATURES MAY EXTEND ABOVE THIS SURFACE.

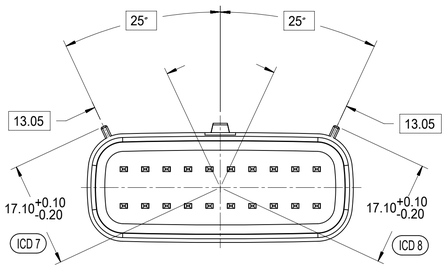

KEYING OPTION D
SCALE 4:1



DETAIL C
SCALE 20:1
APPLIES 2X
SEE KEYING OPTION VIEWS
FOR POSITIONS

P/N	OPTION	MATING CONNECTOR COLOR
150-S-020-2-D02	D	STONE GRAY
150-S-020-2-C02	C	DK GRAY
150-S-020-2-B02	B	LT GRAY
150-S-020-2-A02	A	BLACK

DOCUMENT STATUS	P1	RELEASE DATE	2018/02/16 22:02:25

MATING INTERFACE NOTES: VALID UNLESS OTHERWISE SPECIFIED

1. GENERAL:
   a. DESIGNED TO MATE WITH MOLEX CONNECTOR 33472-2XXX & 160008-0XXX & 160074-0XXX
      A FULL SHROUD ON THE MATING CONNECTOR IS REQUIRED TO INSURE THAT THE
      CONNECTOR-HEADER POLARIZATION FEATURES (OPTIONS A THRU D) WILL FUNCTION.
      THE FULL SHROUD ALSO PREVENTS SCOOP DAMAGE TO THE HEADER PINS. REFER TO
      'SAE/USCAR-12 CONNECTOR DESIGN GUIDE LINES' FOR ADDITIONAL INFORMATION
   b. PARTS MUST BE IN COMPLIANCE TO MOLEX CHEMICAL SUBSTANCES FOR
      PRODUCTS AND PACKAGING SPECIFICATION: ES-40000-5016
   c. FLAMMABILITY REQUIREMENT: PER ISO3795 OR GM3191
      1. BURN RATE 100mm/MIN MAXIMUM
      2. MATERIAL MUST BE SELF EXTINGUISHING

2. MATERIALS:
   a. MATERIAL: SPS/NYLON GF20, REGRIND 20% MAX BY WEIGHT
   b. STANDARD COLORS FOR POLARIZATION (SEE KEYING OPTIONS TABLE).
      DEVIATION REQUIRES APPROVAL OF AUTHORIZED PERSON
   c. FOR BLADE BASE MATERIAL, PLATING AND PROCESS LUBRICANT:
      1. TIN: - BASE MATERIAL:COPPER ALLOY, CONDUCTIVITY >=60% IACS AT 20°C;
         TENSILE STRENGTH >= 410 N/mm㎡P - BARRIER MATERIAL: NICKEL DEPOSIT FROM NICKEL SULFAMATE
         PLATING SOLUTION W/O ANY ADDITIVES
         THICKNESS: 1.25 - 2.25 MICROMETERS
         - TOP LAYER: 100% ELECTRO-DEPOSITED TIN, MATTE FINISH
         THICKNESS: 2.5 - 4.0 MICROMETERS
      2. SILVER: - BARRIER MATERIAL: ELECTRO-DEPOSITED DUCTILE SULPHAMATE NICKEL
         THICKNESS: 1.25 - 2.25 MICROMETERS
         - TOP LAYER: ELECTRO-DEPOSITED SEMI-BRIGHT PURE SILVER
         (0.5% MAX IMPURITIES) OVER NICKEL ANTI-TARNISH TREATMENT
         EVERBRIGHT WS
         THICKNESS: 1.9 - 3.3 MICROMETERS
   3. BLADES MUST CONFORM TO ES-40000-5007, EXCEPT FOR SPECULAR
      REFLECTIVITY - SECTION 6.0
   4. ANY PROCESS LUBRICANT REMAINING ON THE TERMINAL MUST NOT VARNISH
      OR DEGRADE IT'S ELECTRICAL PERFORMANCE UP TO A MAXIMUM CLASS
      AMBIENT TERMPERATURE PER SAE USCAR-2 FOR 1008 HOURS, PROCESS
      LUBRICANTS SHOULD BE APPROVED BY THE RESPONSIBLE ENGINEER.
   5. INFORMATION FOR BLADE DESIGN WAS DEVELOPED FROM EWCAP DWG: EWCAP-001

3. GEOMETRY:
   a. THIS IS A 100% CAD GENERATED PART. THE CAD MATHEMATICAL DATA IS THE MASTER
      FOR THIS PART. FOR DIMENSIONAL OR ANY INFORMATION NOT SHOWN ON THIS DRAWING,
      ANALYZE THE CAD MODEL.
   b. GEOMETRIC DIMENSIONS AND TOLERANCES PER ASME Y14.5M - 1994
   c. GENERAL TOLERANCES: SEE TITLE BLOCK
   d. EDGES AND UNDIMENSIONED DETAILS PER ISO13715

4. MANUFACTURING:
   a. DRAFT TO BE WITHIN TOLERANCE.
      PLUS DRAFT - INDICATES A DIMENSION REPRESENTS THE SMALLEST SIZE
      OF A FEATURE. DRAFT WILL ADD MATERIAL.
      MINUS DRAFT - INDICATES A DIMENSION REPRESENTS THE LARGEST SIZE
      OF A FEATURE. DRAFT WILL REMOVE MATERIAL.
   b. ALLOWABLE FLASH MAX 0.20 HIGH BY MAX 0.13 THICK.
   c. ALLOWABLE SPLIT/PARTING LINE MISMATCH 0.2 MAX.
   d. VISUAL DEFECTS SHALL MEET COSMETIC STANDARD PS-45499-002 (Class B)
   e. NO EXTERNAL MOLD RELEASE AGENT ALLOWED DURING MANUFACTURING
   f. NO PARTING LINES, NO DRAFT, MISMATCHES OR EJECTOR MARKS PERMISSIBLE WITHIN
      SEALING SURFACE. SEALING SURFACE TOOLING TO BE PROCESSED
      TO A SURFACE FINISH OF Ra16 (#32 PAPER) MINIMUM.

NOT VALIDATED

SYMBOLS	DIMENSION UNITS	SCALE
A = 0	mm	1:1
C = 0	GENERAL TOLERANCES (UNLESS SPECIFIED)	
F = 0	ANGULAR TOL ± 1.0 °	
S = 0	4 PLACES ±	
= 0	3 PLACES ±	
C = 0	2 PLACES ± 0.1	
= 0	1 PLACE ± 0.2	
= 0	0 PLACES ±	
= 0	DRAFT WHERE APPLICABLE MUST REMAIN WITHIN DIMENSIONS	
V = 0		

THIS DRAWING CONTAINS INFORMATION THAT IS PROPRIETARY TO MOLEX ELECTRONIC TECHNOLOGIES, LLC AND SHOULD NOT BE USED WITHOUT WRITTEN PERMISSION

CURRENT REV DESC:

EC NO:	171650	
DRWN:	DDEB	2018/01/19
CHK'D:	MVANSLAMBROU	2018/02/16
APPR:	MVANSLAMBROU	2018/02/16

INITIAL REVISION:

DRWN:	APROFFITT	2014/05/14
APPR:	VKOSHY	2014/06/27

molex

MX150 RCPT
DUAL ROW SEALED ASSEMBLY MAT SEAL

PRODUCT CUSTOMER DRAWING

THIRD ANGLE PROJECTION	DRAWING	SERIES
	A1-SIZE	33472

DOCUMENT NUMBER	DOC TYPE	DOC PART	REVISION
SD-33472-0001	PSD	001	C2

MATERIAL NUMBER	CUSTOMER	SHEET NUMBER
	GENERAL MARKET	11 OF 11

TABLE OF CONTENTS	
SHEET NO.	SHEET DESCRIPTION
1	NOTES AND BOM
2	CONFIGURATIONS
3	SCHLEMMER BACKSHELL DETAIL
4	MOLEX BACKSHELL DETAIL

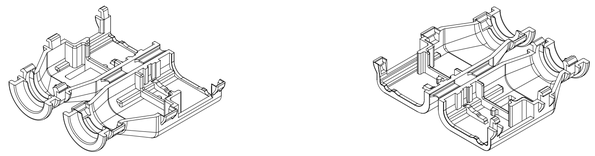

2X3 RECEPTACLE

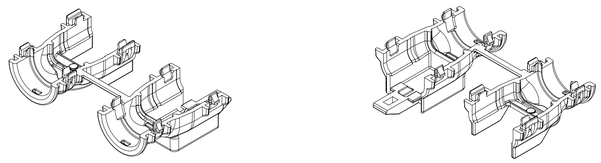

2X4 RECEPTACLE

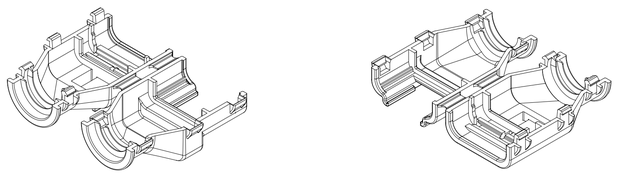

2X6 RECEPTACLE

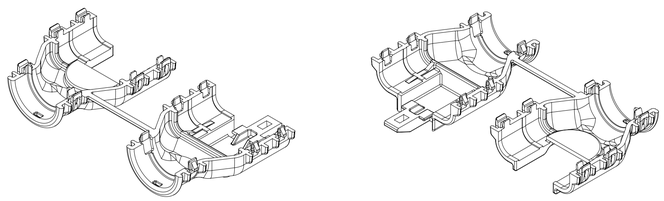

2X8 RECEPTACLE

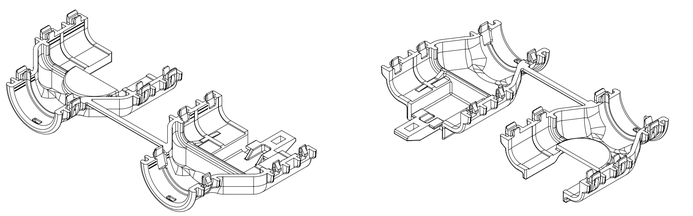

2X10 RECEPTACLE

BACKSHELL NOTES: VALID UNLESS OTHERWISE SPECIFIED

1. GENERAL:
a. APPLICATION SPECIFICATION SEE: AS-34951-001
-DESIGNED TO MATE WITH RECEPTACLE SEALED ASSEMBLY AS SPECIFIED IN SD-33472-0001.
-COMPONENTS ARE OPTIONAL AND MUST BE PURCHASED SEPERATELY
b. MOLEX PRODUCT SPECIFICATION SEE: TBD
-BACKSHELL DESIGN IS OWNED BY MOLEX.
c. OUTSOURCED MFG PRODUCT SPECIFICATION
-BACKSHELL DESIGN IS OWNED BY SCHLEMMER.
-THESE PRODUCTS ARE ONE TIME USE ONLY.
-REMOVAL FORCE OF THE BACKSHELL FROM THE MOLEX CONNECTOR TO BE 100N MIN.
-REMOVAL FORCE OF SLIT CONVOLUTE FROM THE WITH RIB OPTION BACKSHELLS TO BE 100N MIN.
-REMOVAL FORCE OF UNSLIT CONVOLUTE FROM THE WITH RIB OPTION BACKSHELLS TO BE 100N MIN.
d. PACKAGING SPECIFICATION: SEE BOM
e. PARTS MUST BE IN COMPLIANCE TO MOLEX CHEMICAL SUBSTANCES FOR PRODUCTS AND PACKAGING SPECIFICATION: QEHS-699000-300
f. DATA MUST BE SUBMITTED UNDER THE MOLEX PART NUMBER TO IMDS (COMPANY ID#13255)
g. FOLLOWING PRODUCTION CODES TO BE PRESENT
-DATE CODE
-MOLD CAVITY CODE
-MOLEX LOGO
-RECYCLE CODE
-SUPPLIER PART NUMBER - SCHLEMMER PARTS ONLY
h. CONNECTOR MUST HAVE CLIPSLOT FEATURE FOR USE WITH MOLEX BACKSHELLS

2. DESIGN - MATERIALS:
a. PA66 0% GLASS FILLED
b. BLACK

3. DESIGN GEOMETRY:
a. THIS IS A 100% CAD GENERATED PART. THE CAD MATHEMATICAL DATA IS THE MASTER FOR THIS PART. FOR DIMENSIONAL OR ANY INFORMATION NOT SHOWN ON THIS DRAWING, ANALYZE THE CAD MODEL.
b. GEOMETRIC DIMENSIONS AND TOLERANCES PER ASME Y14.5M - 2009.
c. CORNERS SHOWN AS SHARP TO BE R 0.1.
d. VISUAL DEFECTS SHALL MEET COSMETEIC STANDARD PS-45499-002 (CLASS C).
e. ALLOWABLE FLASH, PARTING LINES MISMATCH, EJECTOR PINS MARK, AND GATE VESTIGE TO BE +0.30 MAX PROTUSION.

	BILL OF MATERIALS (BOM)							
DESCRIPTION	PART NUMBER	CIRCUIT SIZE	COLOR	RIBS	CONVOLUTE SIZE	PACKAGING DRAWING NUMBER	STATUS	MANUFACTURER
2X3, WITH RIB	34951-0610	2X3	BLACK	YES	9 mm DELPHI	PK-31302-118	SALEABLE	OUTSOURCED MFG
2X3, WITHOUT RIB	34951-0620	2X3	BLACK	NO	9 mm DELPHI	PK-31302-118	SALEABLE	OUTSOURCED MFG
2X4, WITH RIB	34951-0811	2X4	BLACK	YES	NW 12 SCHLEMMER	349509000 PDD	SALEABLE	MOLEX
2X4, WITHOUT RIB	34951-0821	2X4	BLACK	NO	NW 12 SCHLEMMER	349509000 PDD	SALEABLE	MOLEX
2X6, WITH RIB	34951-1210	2X6	BLACK	YES	13 mm DELPHI	PK-31302-118	SALEABLE	OUTSOURCED MFG
2X6, WITHOUT RIB	34951-1220	2X6	BLACK	NO	13 mm DELPHI	PK-31302-118	SALEABLE	OUTSOURCED MFG
2X8, WITH RIB	34951-1611	2X8	BLACK	YES	NW 16 SCHLEMMER	349509000 PDD	SALEABLE	MOLEX
2X8, WITHOUT RIB	34951-1621	2X8	BLACK	NO	NW 16 SCHLEMMER	349509000 PDD	SALEABLE	MOLEX
2X10, WITH RIB	34951-2011	2X10	BLACK	YES	NW 16 SCHLEMMER	349509000 PDD	SALEABLE	MOLEX
2X10, WITHOUT RIB	34951-2021	2X10	BLACK	NO	NW 16 SCHLEMMER	349509000 PDD	SALEABLE	MOLEX

REV	REV DESCRIPTION
B10	ADDED BALLOON NUMBER TO PAGE 3 -SCHLEMMER PAGE
B9	CHANGED PARTS STATUS TO SALEABLE
B8	ADDED BALLOON NO. 90
B7	UPDATED BALLON NUMBERS
B6	UPDATED RIB AND WEDGE FEATURES
B3	UPDATED TOLERANCES
B2	ADDED BALLOONS & UPDATED BOM
B1	ADDED MOLEX PART NUMBERS
B	MIGRATION
A6	UPDATED BILL OF MATERIALS
A5	UPDATED STATUS COLUMN
A4	MINOR NOMENCLATURE CLEAN UP
A3	UPDATED VIEWSET & NOTES
A2	UPDATED REFERENCE DRAWINGS
A1	UPDATED NOTES
A	INITIAL RELEASE

INSPECTION NUMBER LOG
LAST NUMBER: 1 - 5
ADDED: 40 42 44 46 48 49 89 90 50 67
REMOVED: 40 44

THIS DRAWING CONTAINS INFORMATION THAT IS PROPRIETARY TO MOLEX ELECTRONIC TECHNOLOGIES, LLC AND SHOULD NOT BE USED WITHOUT WRITTEN PERMISSION

EC NO: 632862
DRWN: PPALLAN 2020/02/20
CHK'D: MVANSLAMBROU 2020/02/26
APPR: MVANSLAMBROU 2020/02/26

GENERAL TOLERANCES (UNLESS SPECIFIED)
ANGULAR TOL ± 3.0 °
4 PLACES ±
3 PLACES ±
2 PLACES ± 0.1
1 PLACE ± 0.2
0 PLACES ±
DRAFT WHERE APPLICABLE MUST REMAIN WITHIN DIMENSIONS

DIMENSION UNITS: mm
SCALE: 1:1
DRWN BY: DAHALL DATE: 2013/03/27
CHK'D BY: DATE:
APPR BY: VKOSHY DATE: 2013/04/08
DRAWING SIZE: A1
THIRD ANGLE PROJECTION

molex®

MX150 DUAL ROW RECPT BACKSHELLS

PRODUCT CUSTOMER DRAWING

SERIES	MATERIAL NUMBER	CUSTOMER
34951		GENERAL MARKET

DOCUMENT NUMBER	DOC TYPE	DOC PART	SHEET NUMBER
SD-34951-0001	PSD	001	1 OF 4

B10 REV

RELEASE STATUS	P1	RELEASE DATE	2020/02/26 00:51:11

SHEET DESCRIPTION
CONFIGURATIONS

WITH RIB

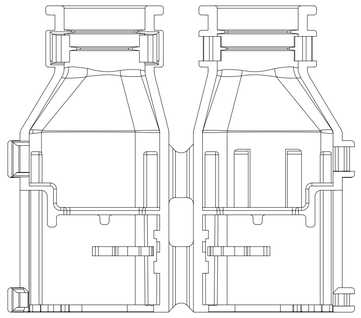

2X3
SCHLEMMER

WITHOUT RIB

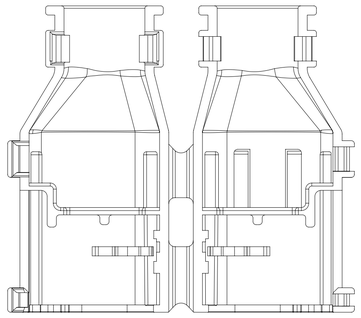

2X3
SCHLEMMER

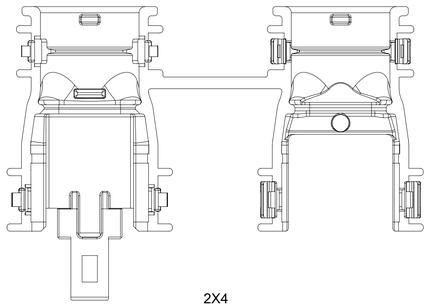

2X4
MOLEX

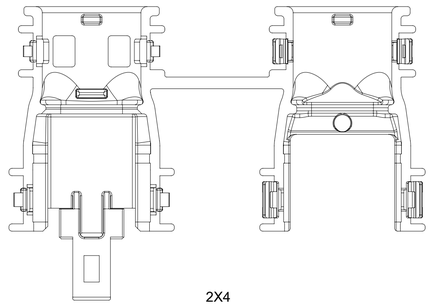

2X4
MOLEX

WITH RIB

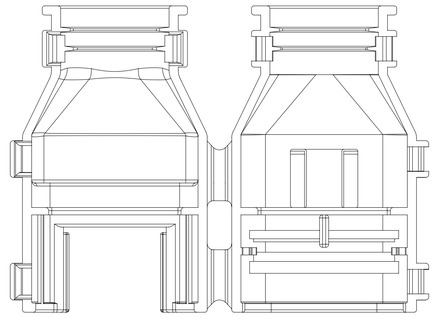

2X6
SCHLEMMER

WITHOUT RIB

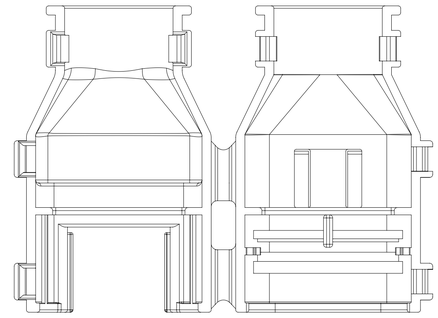

2X6
SCHLEMMER

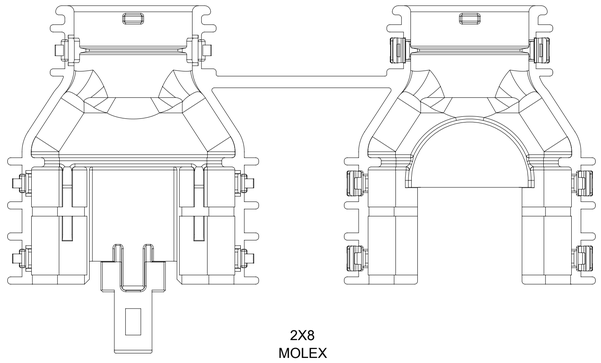

2X8
MOLEX

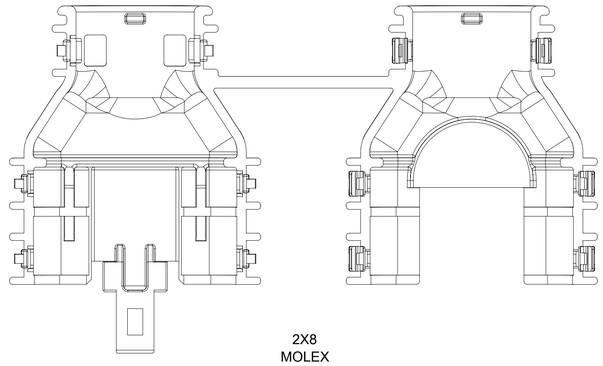

2X8
MOLEX

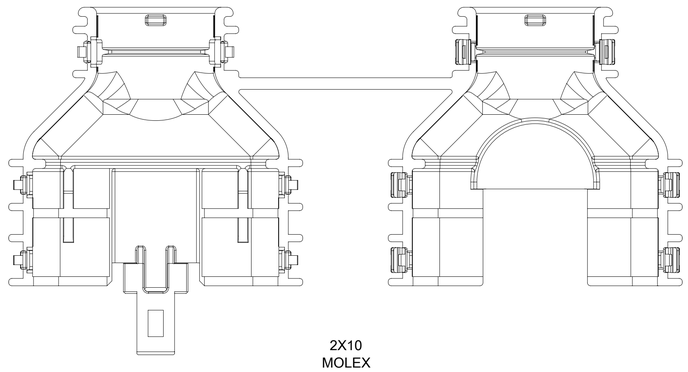

2X10
MOLEX

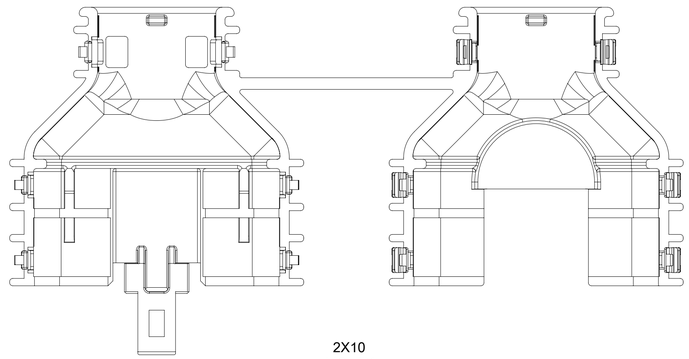

2X10
MOLEX

THIS DRAWING CONTAINS INFORMATION THAT IS PROPRIETARY TO MOLEX ELECTRONIC TECHNOLOGIES, LLC AND SHOULD NOT BE USED WITHOUT WRITTEN PERMISSION

EC NO: 632862
DRWN: PPALLAN 2020/02/20
CHK'D: MVANSLAMBROU 2020/02/26
APPR: MVANSLAMBROU 2020/02/26

GENERAL TOLERANCES (UNLESS SPECIFIED)

ANGULAR TOL ±	3.0	°
4 PLACES	±	
3 PLACES	±	
2 PLACES	±	0.1
1 PLACE	±	0.2
0 PLACES	±	

DRAFT WHERE APPLICABLE MUST REMAIN WITHIN DIMENSIONS

REV: B10

DIMENSION UNITS: mm
SCALE: 2:1
DRWN BY: DAHALL
DATE: 2013/03/27
CHK'D BY:
DATE:
APPR BY: VKOSHY
DATE: 2013/04/08
DRAWING SIZE: A1
THIRD ANGLE PROJECTION

molex®

MX150 DUAL ROW RECPT BACKSHELLS

PRODUCT CUSTOMER DRAWING

SERIES	MATERIAL NUMBER	CUSTOMER
34951		GENERAL MARKET

DOCUMENT NUMBER	DOC TYPE	DOC PART	SHEET NUMBER
SD-34951-0001	PSD	001	2 OF 4

RELEASE STATUS	P1	RELEASE DATE	2020/02/26 00:51:11

SHEET DESCRIPTION
SCHLEMMER BACKSHELL DETAIL

CHARTED DIMENSION						
DESCRIPTION	DIMENSIONS					
	A	B	C	D	E	F
2X3, WITH RIB	50.00	13.20	9.75	3.93	0.65	2.74
2X3, WITHOUT RIB	50.00	13.20	N/A	N/A	N/A	N/A
2X4, WITH RIB	TBD	TBD	TBD	TBD	TBD	TBD
2X4, WITHOUT RIB	TBD	TBD	TBD	TBD	TBD	TBD
2X6, WITH RIB	50.00	17.70	13.60	3.50	0.83	3.10
2X6, WITHOUT RIB	50.00	17.70	N/A	N/A	N/A	N/A

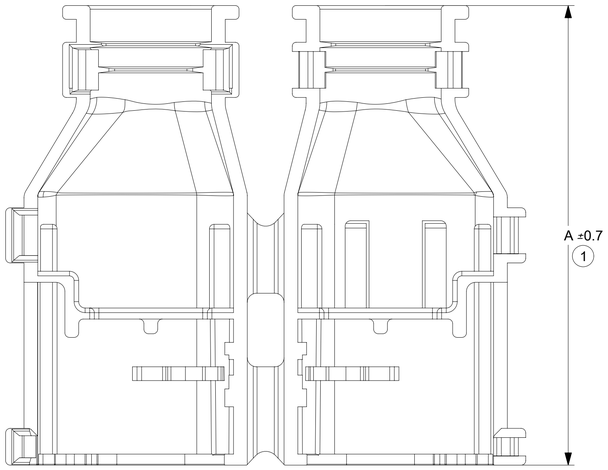

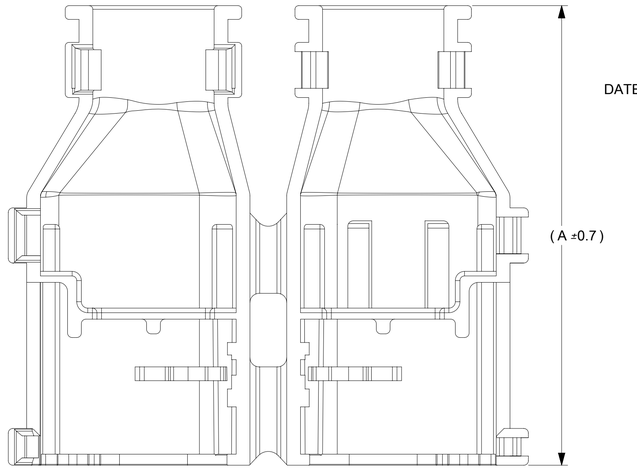

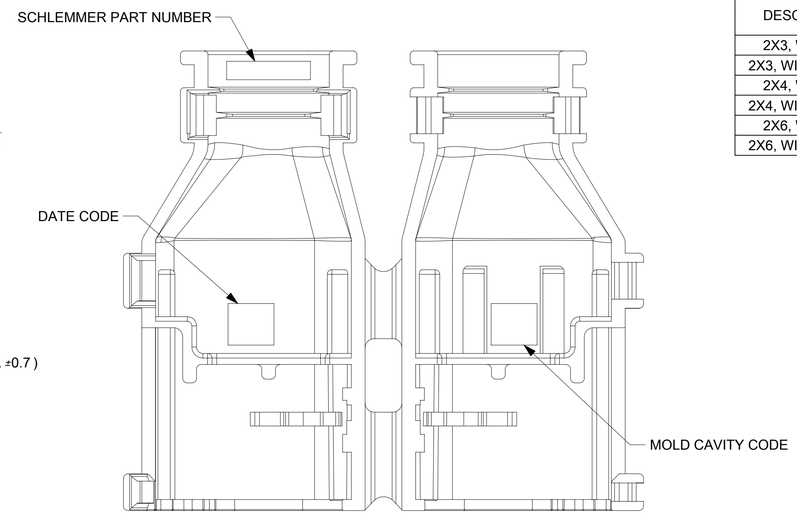

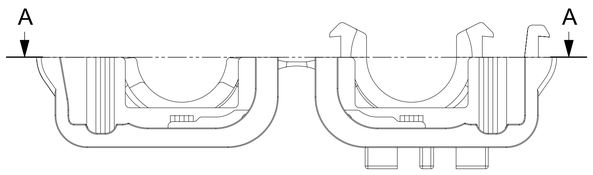

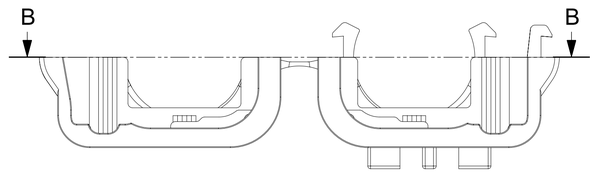

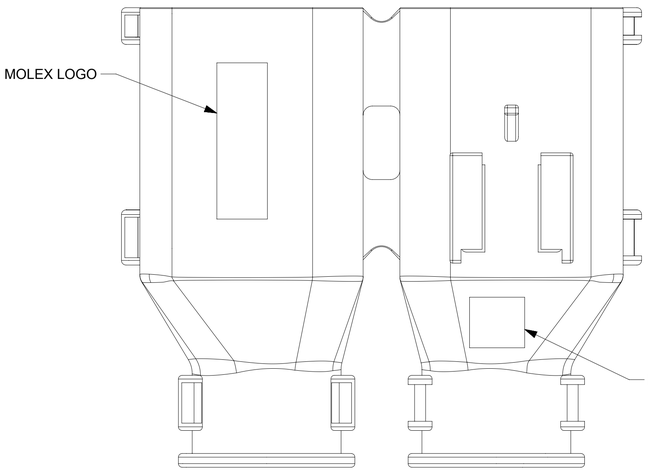

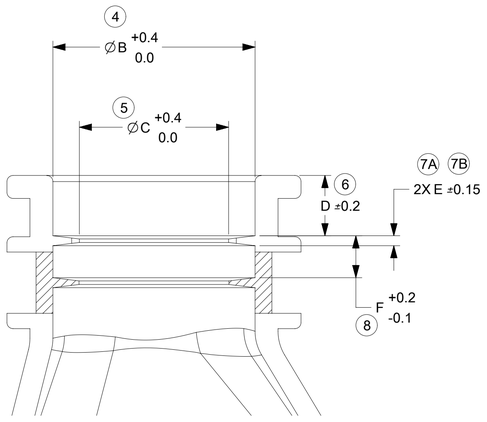

PARTIAL SECTION A-A

SCALE 5:1
WITH RIBS

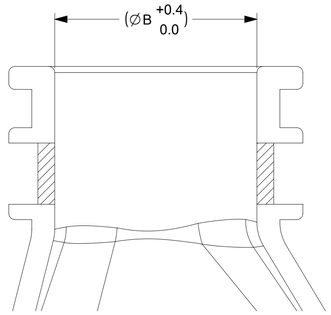

PARTIAL SECTION B-B

SCALE 5:1
WITHOUT RIBS

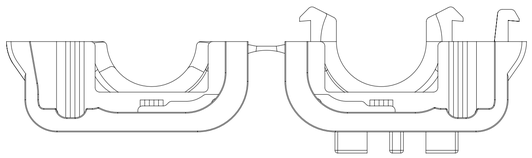

THIS DRAWING CONTAINS INFORMATION THAT IS PROPRIETARY TO MOLEX ELECTRONIC TECHNOLOGIES, LLC AND SHOULD NOT BE USED WITHOUT WRITTEN PERMISSION

EC NO: 632862	2020/02/20	GENERAL TOLERANCES (UNLESS SPECIFIED)	
DRWN: PPALLAN	2020/02/26		
CHK'D: MVANSLAMBROU	2020/02/26		
APPR: MVANSLAMBROU			
		ANGULAR TOL ± 3.0 °	
		4 PLACES ±	
		3 PLACES ±	
		2 PLACES ± 0.1	
		1 PLACE ± 0.2	
		0 PLACES ±	
		DRAFT WHERE APPLICABLE MUST REMAIN WITHIN DIMENSIONS	
B10	REV		

DIMENSION UNITS	mm
SCALE	3:1
DRWN BY	DAHALL
DATE	2013/03/27
CHK'D BY	
DATE	
APPR BY	VKOSHY
DATE	2013/04/08
DRAWING SIZE	A1
THIRD ANGLE PROJECTION	

molex®

MX150 DUAL ROW RECPT BACKSHELLS

PRODUCT CUSTOMER DRAWING

SERIES	MATERIAL NUMBER	CUSTOMER
34951		GENERAL MARKET

DOCUMENT NUMBER	DOC TYPE	DOC PART	SHEET NUMBER
SD-34951-0001	PSD	001	3 OF 4

RELEASE STATUS	P1	RELEASE DATE	2020/02/26 00:51:11

SHEET DESCRIPTION

MOLEX BACKSHELL DETAIL

DESCRIPTION	CHARTED DIMENSION							
	DIMENSIONS							
	V	H	J	K	L	M	N	**Z**
2X4, WITH RIB	16.10	36.80	48.11	16.10	0.80	N/A	N/A	**1.35**
2X4, WITHOUT RIB	16.10	36.80	48.11	16.10	N/A	3.60	5.10	**N/A**
2X8, WITH RIB	19.30	45.60	56.91	19.30	0.80	N/A	N/A	**1.45**
2X8, WITHOUT RIB	19.30	45.60	56.91	19.30	N/A	3.60	5.10	**N/A**
2X10, WITH RIB	19.30	45.60	56.91	19.30	0.80	N/A	N/A	**1.45**
2X10, WITHOUT RIB	19.30	45.60	56.91	19.30	N/A	3.60	5.10	**N/A**

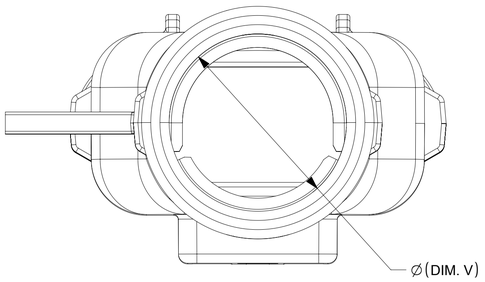

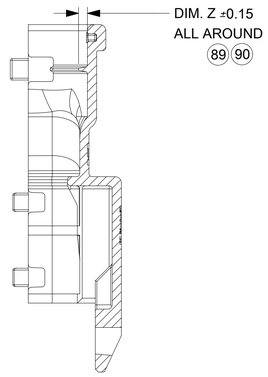

SECTION E-E

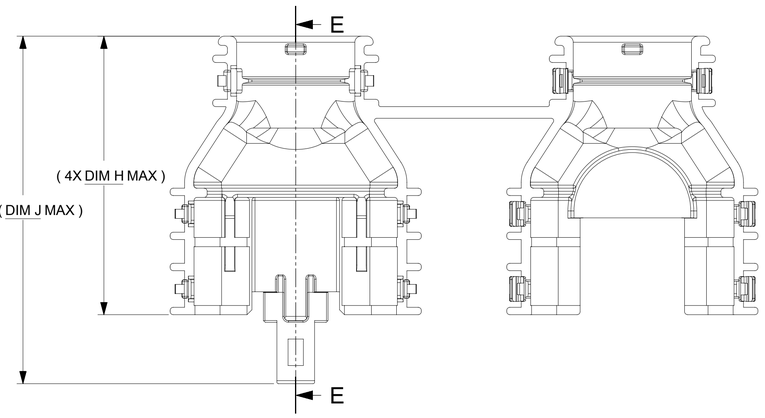

C C

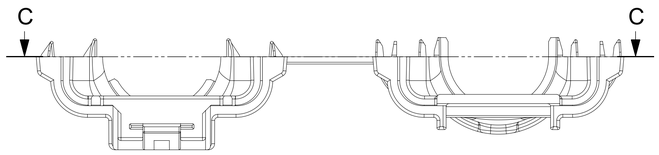

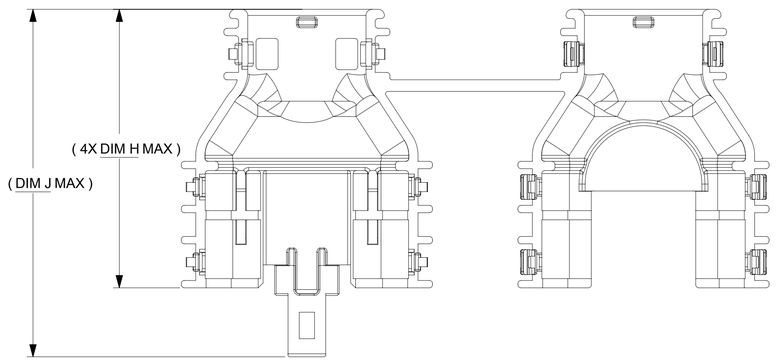

D D

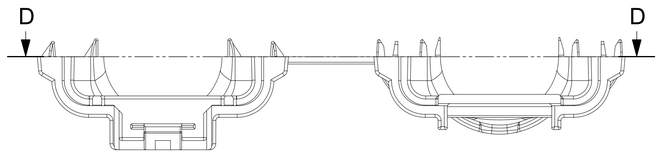

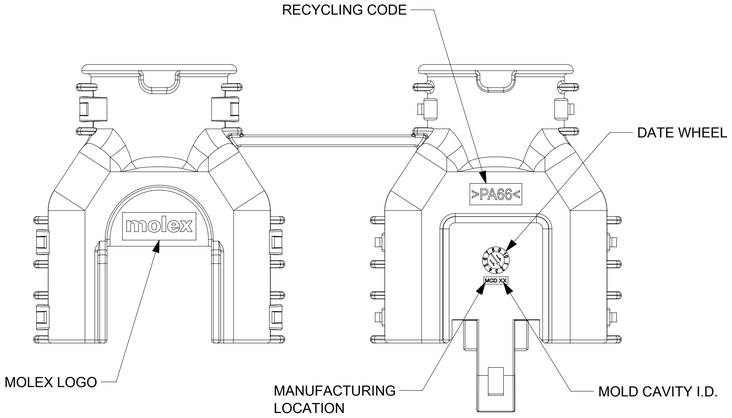

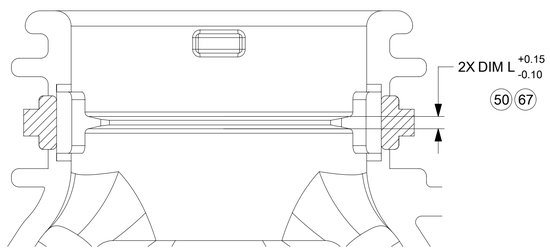

PARTIAL SECTION C-C

SCALE 5:1
WITH RIBS

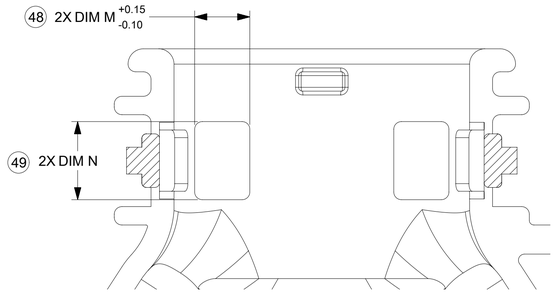

PARTIAL SECTION D-D

SCALE 5:1
WITHOUT RIBS

THIS DRAWING CONTAINS INFORMATION THAT IS PROPRIETARY TO MOLEX ELECTRONIC TECHNOLOGIES, LLC AND SHOULD NOT BE USED WITHOUT WRITTEN PERMISSION

EC NO: 632862
DRWN: PPALLAN 2020/02/20
CHK'D: MVANSLAMBROU 2020/02/26
APPR: MVANSLAMBROU 2020/02/26

GENERAL TOLERANCES (UNLESS SPECIFIED)

ANGULAR TOL ±	3.0 °
4 PLACES	±
3 PLACES	±
2 PLACES	± 0.1
1 PLACE	± 0.2
0 PLACES	±

DRAFT WHERE APPLICABLE MUST REMAIN WITHIN DIMENSIONS

REV: B10

DIMENSION UNITS: mm
SCALE: 2:1
DRWN BY: DAHALL DATE: 2013/03/27
CHK'D BY: DATE:
APPR BY: VKOSHY DATE: 2013/04/08
DRAWING SIZE: A1
THIRD ANGLE PROJECTION

molex®

MX150 DUAL ROW RECPT BACKSHELLS

PRODUCT CUSTOMER DRAWING

SERIES	MATERIAL NUMBER	CUSTOMER
34951		GENERAL MARKET

DOCUMENT NUMBER	DOC TYPE	DOC PART	SHEET NUMBER
SD-34951-0001	PSD	001	4 OF 4

RELEASE STATUS	P1	RELEASE DATE	2020/02/26 00:51:11