HC-HPR-B06-BCLWH-E-BK - Protective cover

1418441

https://www.phoenixcontact.com/us/products/1418441

Please be informed that the data shown in this PDF document is generated from our online catalog. Please find the complete data in the user documentation. Our general terms of use for downloads are valid.

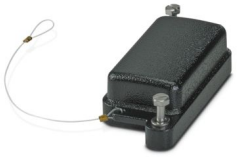

Protective cover B6, with screw locking, material: die-cast aluminum, protective cover material: Al, height: 32 mm, for increased environmental and EMC requirements

Your advantages

- Vibration and shock: IEC 61373/EN 50155, category 1, class 1B

Commercial data

Item number	1418441
Packing unit	1 pc
Minimum order quantity	1 pc
Sales key	BF66
Product key	BF7AZC
GTIN	4055626140223
Weight per piece (including packing)	139.1 g
Weight per piece (excluding packing)	132.2 g
Customs tariff number	85389099
Country of origin	CN

Technical data

Notes

General	Protective cover for supporting base elements

Product properties

Product type	Protective cover
Housing type	Protective cover
Series	HPR-B6
Application	for increased environmental and EMC requirements
Type	B6

Dimensions

Dimensional drawing	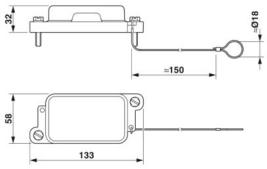
Width	58 mm
Height	32 mm
Length	133 mm

Material specifications

Color	black (RAL 9005)
Material Protective cover	die-cast aluminum
Housing material	die-cast aluminum
Housing surface material	Powder-coated, black
Material, protective cover	Al
Locking latch material	Stainless steel

Mechanical properties

Mechanical data

Locking type	Screw

Environmental and real-life conditions

Ambient conditions

Degree of protection	IP66
	IP68
	IP69 (ISO 20653:2013-02)
Ambient temperature (operation)	-40 °C ... 125 °C

Drawings

Dimensional drawing

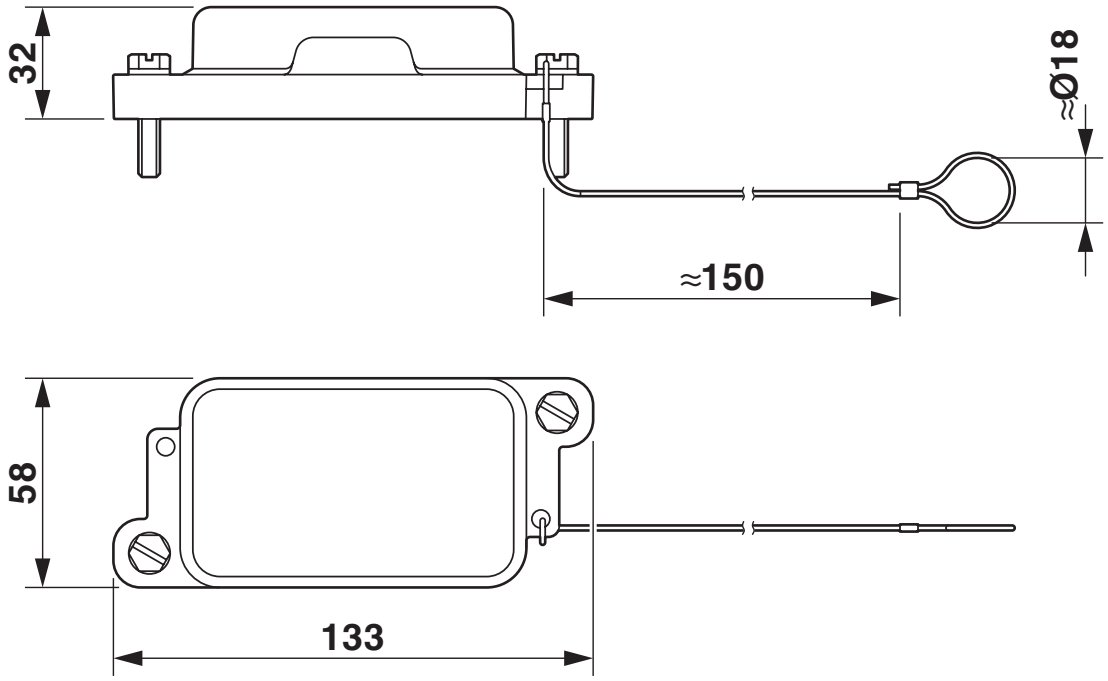

Dimensional drawing

Approvals

To download certificates, visit the product detail page: https://www.phoenixcontact.com/us/products/1418441

DNV
Approval ID: TAE000037S

EAC
Approval ID: RU C-DE.AI30.B.01102

Classifications

ECLASS

ECLASS-11.0	27440208
ECLASS-12.0	27440208
ECLASS-13.0	27440208

ETIM

ETIM 9.0	EC002314

UNSPSC

UNSPSC 21.0	39121400

Environmental product compliance

EU RoHS

Fulfills EU RoHS substance requirements	Yes
Exemption	6(c)

China RoHS

Environment friendly use period (EFUP)	EFUP-E
	No hazardous substances above the limits

EU REACH SVHC

REACH candidate substance (CAS No.)	Lead(CAS: 7439-92-1)

Phoenix Contact 2024 © - all rights reserved
https://www.phoenixcontact.com

Phoenix Contact USA
586 Fulling Mill Road
Middletown, PA 17057, United States
(+717) 944-1300
info@phoenixcon.com