# SMA Female Commercial Grade Connector Solder Attachment .078 inch End Launch PCB, .020 Inches Diameter Pin



## PE51738

### Configuration

- SMA Female Connector
- 50 Ohms
- Straight Body Geometry
- Connector Interface Types: .078 inch End Launch
- Commercial Grade Design

### Features

- Max. Operating Frequency 18 GHz
- Excellent VSWR of 1.2:1
- Gold Plated Beryllium Copper Contact

### Applications

- General Purpose Test
- PCB Applications

### Description

Pasternack's PE51738 , SMA, Commercial Grade, connector with solder attachment for .078 inch End Launch PCB is part of our full line of RF components available for same-day shipping. Our SMA female connector operates up to a maximum frequency of 18 GHz and offers excellent VSWR of 1.2:1.

Our SMA female connector PE51738 datasheet specifications and drawing with dimensions are shown below in this PDF. Pasternack's broad catalog of RF, microwave and millimeter wave connectors allows designers to configure and customize their signal connections however they like. Whether the need is to provide an I/O for a board design, or simply create a custom cable assembly configuration, Pasternack has the right connector for the job. Pasternack can also expertly build your custom cable assemblies for you and ship same-day.

### Electrical Specifications

| Description | Minimum | Typical | Maximum | Units |
|---|---|---|---|---|
| Frequency Range | DC | | 18 | GHz |
| VSWR | | | 1.2:1 | |
| Insertion Loss | | | 0.3 | dB |
| Dielectric Withstanding Voltage (AC) | | | 1,000 | Vrms |
| Inner Conductor DC Resistance | | | 6 | mOhms |
| Outer Conductor DC Resistance | | | 2.5 | mOhms |
| Insulation Resistance | 5,000 | | | MOhms |
| RF Leakage | -90 | | | dB |
| Impedance | | 50 | | Ohms |

### Mechanical Specifications

**Size**

| | |
|---|---|
| Length | 0.52 in [13.21 mm] |
| Width | 0.32 in [8.13 mm] |
| Height | 0.4 in [10.16 mm] |
| Weight | 0.00489 lbs [2.22 g] |
| Mating Cycles | 500 Cycles |
| Mating Torque | 0.9 to 1.13 in-lbs [[0.10 to 0.13 Nm]] |


© 2023 Infinite Electronics, Inc. Pasternack is a registered trademark of Infinite Electronics, Inc.
+1 (866) 558-2786 | sales@pasternack.com | pasternack.com

# SMA Female Commercial Grade Connector Solder Attachment .078 inch End Launch PCB, .020 Inches Diameter Pin



## PE51738

### Material Specifications

| Description | Material | Plating |
|---|---|---|
| Contact | Beryllium Copper | Gold |
| Insulation | PTFE | |
| Outer Conductor | Brass | Nickel |
| Body | Brass | Gold |

### Environmental Specifications

**Temperature**

| | |
|---|---|
| Operating Range | -55 to +125 deg C |

### Compliance Certifications (see product page for current document)

### Plotted and Other Data

Notes:

SMA Female Commercial Grade Connector Solder Attachment .078 inch End Launch PCB, .020 Inches Diameter Pin from Pasternack Enterprises has same day shipment for domestic and International orders. Our RF, microwave and millimeter wave products maintain a 99.4% availability and are part of the broadest selection in the industry.

Click the following link (or enter part number in "SEARCH" on website) to obtain additional part information including price, inventory and certifications: SMA Female Commercial Grade Connector Solder Attachment .078 inch End Launch PCB, .020 Inches Diameter Pin PE51738

URL: https://www.pasternack.com/sma-female-.078-end-launch-pcb-connector-pe51738-p.aspx

The information contained within this document is accurate to the best of our knowledge and representative of the part described herein. It may be necessary to make modifications to the part and/or the documentation of the part in order to impliment improvements. Pasternack Enterprises reserves the right to make such changes as required. Unless otherwise stated, all specifications are nominal. Pasternack Enterprises does not make any representation or warranty regarding the suitability of the part described herein for any particular purpose, and Pasternack Enterprises does not assume liability arising out of the use of any part or document.


© 2023 Infinite Electronics, Inc. Pasternack is a registered trademark of Infinite Electronics, Inc.

# PE51738 CAD Drawing

SMA Female Commercial Grade Connector Solder Attachment
.078 inch End Launch PCB, .020 Inches Diameter Pin

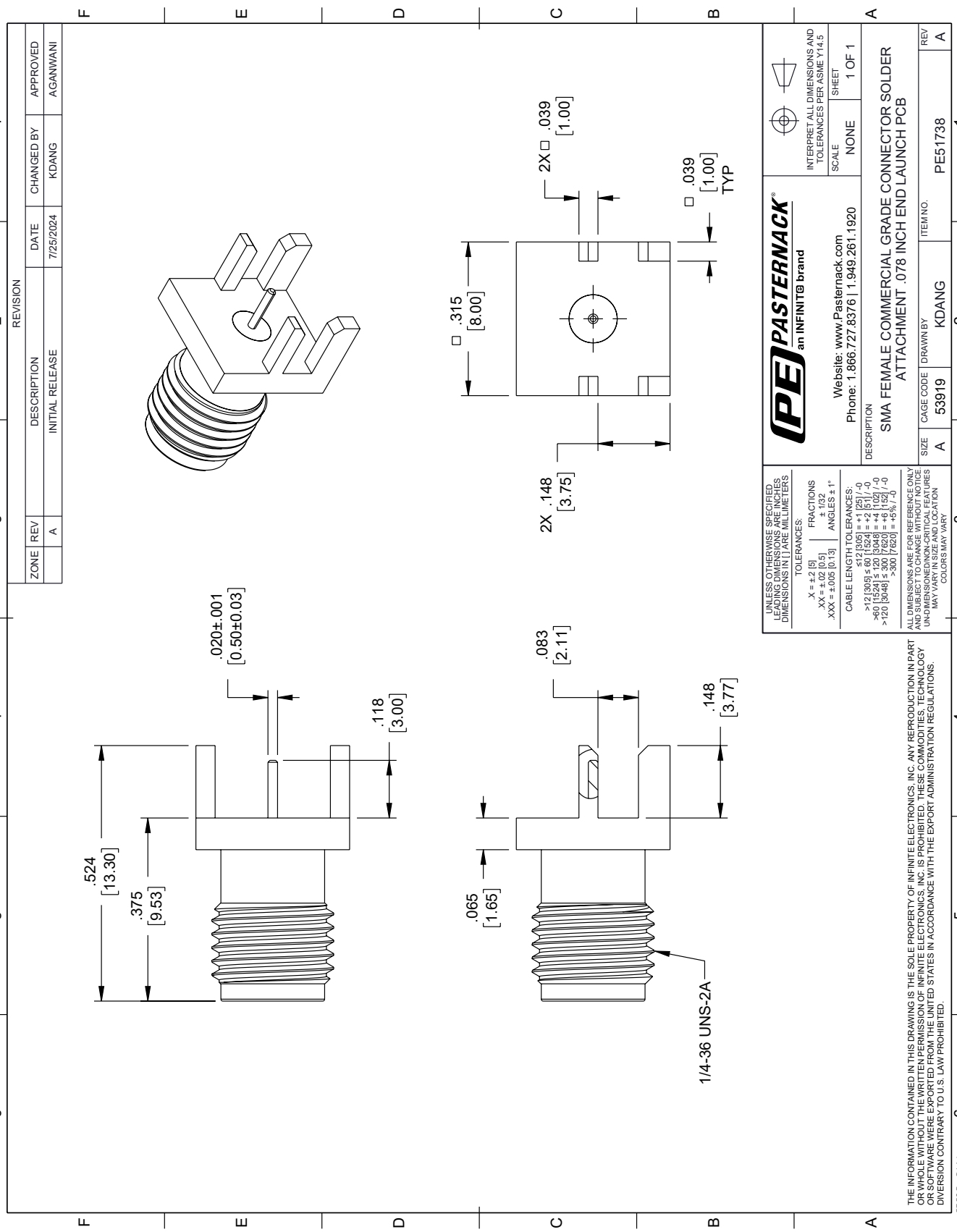



© 2023 Infinite Electronics, Inc. Pasternack is a registered trademark of Infinite Electronics, Inc.