PASTERNACK
an INFINITE brand



4.1/9.5 Mini DIN Male Low PIM Connector Solder Attachment for TFT-402, TFT-402-LF

RF Connectors
Technical Data Sheet

TIMES MICROWAVE SYSTEMS
An Amphenol Company

TC-402-4195M-LP

Times Microwave Systems Connector Specification

Configuration

- 4.1/9.5 Mini DIN Male Connector
- 50 Ohms
- Straight Body Geometry
- Connector Interface Types: TFT-402, TFT-402-LF
- Low PIM Design

Features

- Max. Operating Frequency 3 GHz
- Excellent VSWR of 1.15:1
- PIM levels lower than -160 dBc
- Silver Plated Brass Contact
- 5 µm contact plating
- IP 67 Rated

Applications

- General Purpose Test
- Wireless Communications
- Custom Cable Assemblies
- Low PIM Applications
- Distributed Antenna Systems (DAS)

Description

Pasternack's TC-402-4195M-LP 4.1/9.5 Mini DIN male connector with solder/solder attachment for TFT-402 and TFT-402-LF is part of our full line of RF components available for same-day shipping. Our 4.1/9.5 Mini DIN male connector operates up to a maximum frequency of 3 GHz and offers excellent VSWR of 1.15:1. The 4.1/9.5 Mini DIN male connector also has low passive intermodulation of -160 dBc. The connector has an IP67 rating to protect against dust and temporary moisture protection under immersion conditions.

Our 4.1/9.5 Mini DIN male connector TC-402-4195M-LP datasheet specifications and drawing with dimensions are shown below in this PDF. Pasternack's broad catalog of RF, microwave and millimeter wave connectors allows designers to configure and customize their signal connections however they like. Whether the need is to provide an I/O for a board design, or simply create a custom cable assembly configuration, Pasternack has the right connector for the job. Pasternack can also expertly build your custom cable assemblies for you and ship same-day.

Electrical Specifications

Description	Minimum	Typical	Maximum	Units
Frequency Range	DC		3	GHz
VSWR			1.15:1	
Insertion Loss			0.1	dB
Passive Intermodulation			-160	dBc
Operating Voltage (DC)			2,000	Vdc
Inner Conductor DC Resistance			1	mOhms
Outer Conductor DC Resistance			0.5	mOhms
Insulation Resistance	5,000			MOhms

Click the following link (or enter part number in "SEARCH" on website) to obtain additional part information including price, inventory and certifications: 4.1/9.5 Mini DIN Male Low PIM Connector Solder Attachment for TFT-402, TFT-402-LF TC-402-4195M-LP

Pasternack Enterprises, Inc. • P.O. Box 16759, Irvine, CA 92623
Phone: (866) 727-8376 or (949) 261-1920 • **Fax:** (949) 261-7451
Sales@Pasternack.com • Techsupport@Pasternack.com

© 2020 Pasternack Enterprises All Rights Reserved



4.1/9.5 Mini DIN Male Low PIM Connector Solder Attachment for TFT-402, TFT-402-LF

Electrical Specification Notes:
Insertion Loss is 0.1*sqrt(FGHz)

Mechanical Specifications

Size

Length	0.964 in [24.49 mm]
Width/Dia.	0.866 in [22.00 mm]
Mating Torque	106 in-lbs [11.98 Nm]
Cable Retention Force	33 lbs [14.97 kg]

Material Specifications

Description	Material	Plating
Contact	Brass	Silver 5 µm
Insulation	PTFE	
Body	Brass	Tri-Metal 2 µm
Coupling Nut	Brass	Nickel 5 µm
Gasket	Silicone Rubber	

Environmental Specifications

Temperature

Operating Range	-40 to +85 deg C
Ingress Protection (IP) Rating	IP 67 Rated
Shock	IEC 60068 -2-27
Vibration	IEC 60068 -2-6-Fc
Thermal Shock	IEC 60068 -2-14-Na

Environmental Specification Notes:
Weather Standard: IEC 60068 40/085/21

Compliance Certifications (see product page for current document)

Plotted and Other Data

Notes:

Click the following link (or enter part number in “SEARCH” on website) to obtain additional part information including price, inventory and certifications: 4.1/9.5 Mini DIN Male Low PIM Connector Solder Attachment for TFT-402, TFT-402-LF TC-402-4195M-LP

Pasternack Enterprises, Inc. • P.O. Box 16759, Irvine, CA 92623
Phone: (866) 727-8376 or (949) 261-1920 • **Fax:** (949) 261-7451
Sales@Pasternack.com • Techsupport@Pasternack.com

© 2020 Pasternack Enterprises All Rights Reserved



4.1/9.5 Mini DIN Male Low PIM Connector Solder Attachment for TFT-402, TFT-402-LF

RF Connectors
Technical Data Sheet

TIMES MICROWAVE SYSTEMS An Amphenol Company

TC-402-4195M-LP

4.1/9.5 Mini DIN Male Low PIM Connector Solder Attachment for TFT-402, TFT-402-LF from Pasternack Enterprises has same day shipment for domestic and International orders. Our RF, microwave and millimeter wave products maintain a 99.4% availability and are part of the broadest selection in the industry.

Click the following link (or enter part number in “SEARCH” on website) to obtain additional part information including price, inventory and certifications: 4.1/9.5 Mini DIN Male Low PIM Connector Solder Attachment for TFT-402, TFT-402-LF TC-402-4195M-LP

URL: https://www.pasternack.com/4.1-9.5-mini-din-male-tft-402-connector-tc-402-4195m-lp-p.aspx

The information contained in this document is accurate to the best of our knowledge and representative of the part described herein. It may be necessary to make modifications to the part and/or the documentation of the part, in order to implement improvements. Pasternack reserves the right to make such changes as required. Unless otherwise stated, all specifications are nominal. Pasternack does not make any representation or warranty regarding the suitability of the part described herein for any particular purpose, and Pasternack does not assume any liability arising out of the use of any part or documentation.

Pasternack Enterprises, Inc. • P.O. Box 16759, Irvine, CA 92623
Phone: (866) 727-8376 or (949) 261-1920 • **Fax:** (949) 261-7451
Sales@Pasternack.com • Techsupport@Pasternack.com

© 2020 Pasternack Enterprises All Rights Reserved

TC-402-4195M-LP CAD Drawing

4.1/9.5 Mini DIN Male Low PIM Connector Solder Attachment for TFT-402, TFT-402-LF

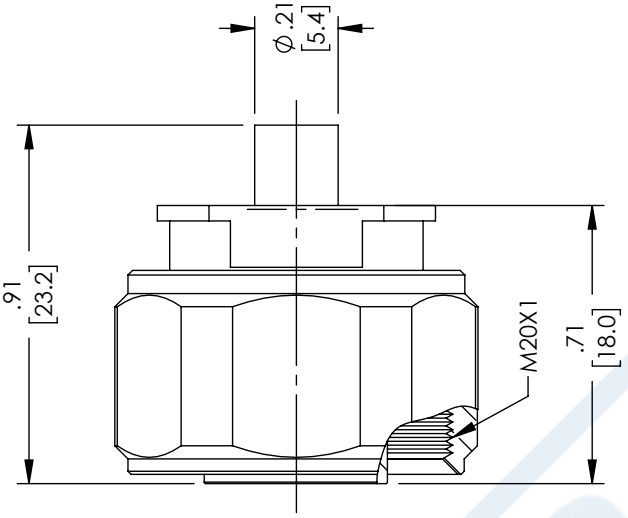

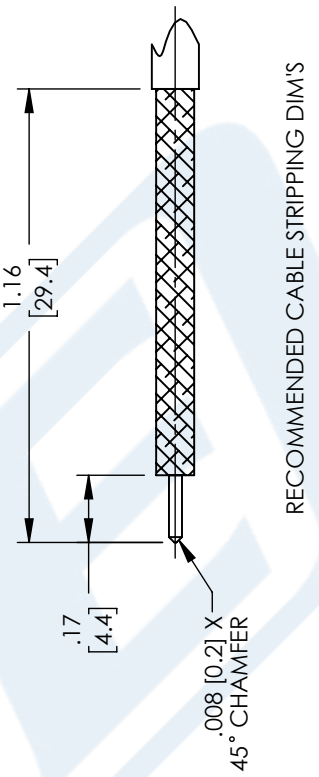

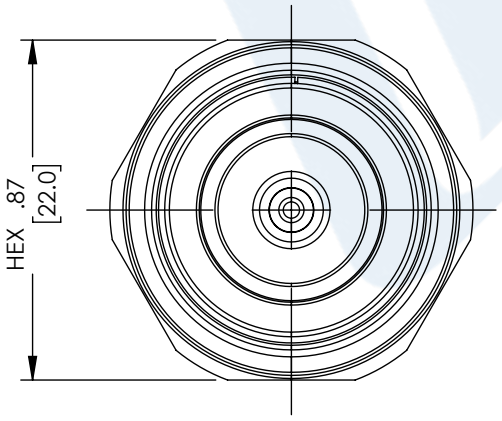

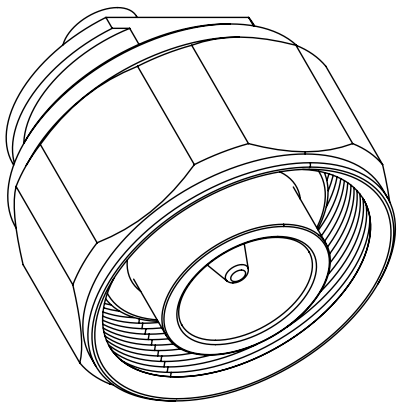

THIRD-ANGLE PROJECTION

THE INFORMATION AND DESIGN IN THIS DOCUMENT IS THE PROPERTY OF PASTERNACK CORPORATION ALL RIGHTS RESERVED.

SHEET 1 OF 1 | SCALE 2:1 | REV A

PASTERNACK an INFINITE brand

Pasternack Enterprises, Inc.
P.O.Box 16759, Irvine, CA 92623.
Phone: 1.949.261.1920 | 1.866.727.8376
Fax: 1.949.261.7451
Website: www.pasternack.com
E-mail: sales@pasternack.com

SIZE	CAGE CODE	DRAWN BY	ITEM NO.
A	53919	DMAY	TC-402-4195M-LP

UNLESS OTHERWISE SPECIFIED
LEADING DIMENSIONS ARE INCHES
DIMENSIONS IN [ ] ARE MILLIMETERS

TOLERANCES:

.X = ± .2	[5.08]	FRACTIONS
.XX = ± .02	[.51]	± 1/32
.XXX = ± .005	[.13]	ANGLES ± 1°

CABLE LENGTH (L) TOLERANCES:

L ≤ 12 [305] = +1 [25] / -0
12 [305] < L ≤ 60 [1524] = +2 [51] / -0
60 [1524] < L ≤ 120 [3048] = +4 [102] / -0
120 [3048] < L ≤ 300 [7620] = +6 [152] / -0
300 [7620] < L = +5%L / -0

ALL DIMENSIONS SHOWN ARE FOR REFERENCE ONLY.

THESE COMMODITIES, TECHNOLOGY OR SOFTWARE WERE EXPORTED FROM THE UNITED STATES IN ACCORDANCE WITH THE EXPORT ADMINISTRATION REGULATIONS. DIVERSION CONTRARY TO U.S. LAW PROHIBITED.

T-Rev.D

© 2020 Pasternack Enterprises All Rights Reserved