CM1402

SIM Card EMI Filter Array with ESD Protection

ON Semiconductor®

http://onsemi.com



WLCSP10
CP SUFFIX
CASE 567BL

MARKING DIAGRAM

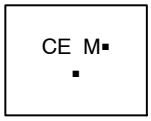

CE = CM1402−03CP
M = Date Code
▪ = Pb−Free Package
(Note: Microdot may be in either location)

ORDERING INFORMATION

Device	Package	Shipping†
CM1402−03CP	CSP−10 (Pb−Free)	3500/Tape & Reel

†For information on tape and reel specifications, including part orientation and tape sizes, please refer to our Tape and Reel Packaging Specification Brochure, BRD8011/D.

Product Description

The CM1402 is an EMI filter array with ESD protection, which integrates three pi filters (C−R−C) and two additional channels of ESD protection. The CM1402 has component values of 20 pF − 47 Ω − 20 pF, and 20 pF − 100 Ω − 20 pF. The parts include avalanche−type ESD diodes on every pin, which provide a very high level of protection for sensitive electronic components that may be subjected to electrostatic discharge (ESD). The ESD diodes connected to the filter ports are designed and characterized to safely dissipate ESD strikes of ±10 kV, beyond the maximum requirement of the IEC 61000−4−2 international standard. Using the MIL−STD−883 (Method 3015) specification for Human Body Model (HBM) ESD, the pins are protected for contact discharges at greater than ±25 kV.

The ESD diodes on pins A4 and C4 ports are designed and characterized to safely dissipate ESD strikes of ±10 kV, well beyond the maximum requirement of the IEC 61000−4−2 international standard.

This device is particularly well suited for portable electronics (e.g. mobile handsets, PDAs, notebook computers) because of its small package format and easy−to−use pin assignments. In particular, the CM1402 is ideal for EMI filtering and protecting data lines from ESD for the SIM card slot in mobile handsets.

The CM1402 incorporates *OptiGuard™* coating which results in improved reliability at assembly. The CM1402 is available in a space−saving, low−profile Chip Scale Package.

Features

- Functionally and Pin−Compatible with CSPEMI400 Device
- *OptiGuard™* Coated for Improved Reliability at Assembly
- Three Channels of EMI Filtering, Each with ESD Protection
- Two Additional Channels of ESD−Only Protection
- ±10 kV ESD Protection (IEC 61000−4−2, Contact Discharge) on All Pins
- ±25 kV ESD Protection (HBM)
- Greater than 30 dB of Attenuation at 1 GHz
- 10−Bump, 1.960 mm x 1.330 mm Footprint Chip Scale Package (CSP)
- Chip Scale Package Features Extremely Low Lead Inductance for Optimum Filter and ESD Performance
- These Devices are Pb−Free and are RoHS Compliant

Applications

- SIM Card Slot in Mobile Handsets
- I/O Port Protection for Mobile Handsets, Notebook Computers, PDAs, etc.
- EMI Filtering for Data Ports in Cell Phones, PDAs or Notebook Computers

© Semiconductor Components Industries, LLC, 2011

ELECTRICAL SCHEMATIC

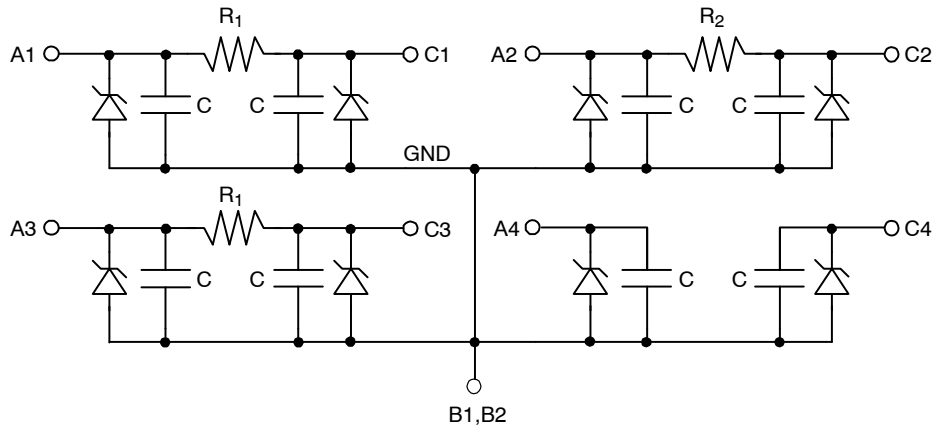

Table 1. PIN DESCRIPTIONS

10−bump CSP Package		
Type	**Pin**	**Description**
EMI Filter	A1	EMI Filter with ESD Protection for RST Signal
	C1	EMI Filter with ESD Protection for RST Signal
EMI Filter	A2	EMI Filter with ESD Protection for CLK Signal
	C2	EMI Filter with ESD Protection for CLK Signal
Device Ground	B1	Device Ground
	B2	Device Ground
EMI Filter	A3	EMI Filter with ESD Protection for DAT Signal
	C3	EMI Filter with ESD Protection for DAT Signal
ESD Channel	A4	ESD Protection Channel – V_{CC} Supply
ESD Channel	C4	ESD Protection Channel

PACKAGE / PINOUT DIAGRAMS

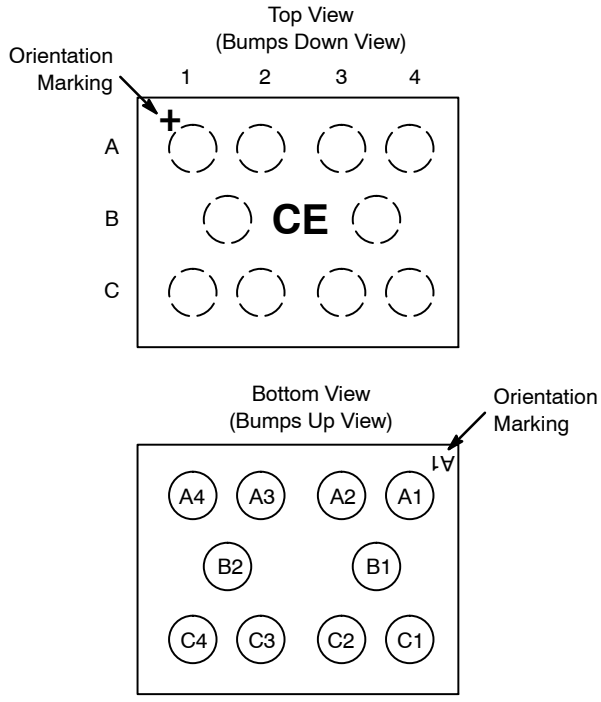

CM1402
CSP Package with OptiGuard coating

SPECIFICATIONS

Table 2. ABSOLUTE MAXIMUM RATINGS

Parameter	Rating	Units
Storage Temperature Range	−65 to +150	°C
DC Power per Resistor	100	mW
DC Package Power Rating	300	mW

Stresses exceeding Maximum Ratings may damage the device. Maximum Ratings are stress ratings only. Functional operation above the Recommended Operating Conditions is not implied. Extended exposure to stresses above the Recommended Operating Conditions may affect device reliability.

Table 3. STANDARD OPERATING CONDITIONS

Parameter	Rating	Units
Operating Temperature Range	–40 to +85	°C

Table 4. ELECTRICAL OPERATING CHARACTERISTICS (Note 1)

Symbol	Parameter	Conditions	Min	Typ	Max	Units
R_1	Resistance of R_1		80	100	120	Ω
R_2	Resistance of R_2		38	47	56	Ω
C	Capacitance	VIN = 2.5 VDC, 1 MHz, 30 mV ac	16	20	24	pF
$V_{STANDOFF}$	Stand–off Voltage	I = 10 μA		6.0		V
I_{LEAK}	Diode Leakage Current	V_{BIAS} = 3.3 V		0.1	1.0	μA
V_{SIG}	Signal Voltage Positive Clamp Negative Clamp	 I_{LOAD} = 10 mA I_{LOAD} = –10 mA	 5.6 –1.5	 6.8 –0.8	 9.0 –0.4	V
V_{ESD}	In–system ESD Withstand Voltage a) Human Body Model, MIL–STD–883, Method 3015 b) Contact Discharge per IEC 61000–4–2	(Notes 2 and 4)	 ±25 ±10			kV
V_{CL}	Clamping Voltage during ESD Discharge MIL–STD–883 (Method 3015), 8 kV Positive Transients Negative Transients	(Notes 2, 3 and 4)			 +12 –7	V
f_{C1}	Cut–off Frequency Z_{SOURCE} = 50 Ω, Z_{LOAD} = 50 Ω	R = 100 Ω, C = 20 pF		77		MHz
f_{C2}	Cut–off Frequency Z_{SOURCE} = 50 Ω, Z_{LOAD} = 50 Ω	R = 47 Ω, C = 20 pF		85		MHz

1. T_A = 25°C unless otherwise specified.
2. ESD applied to input and output pins with respect to GND, one at a time.
3. Clamping voltage is measured at the opposite side of the EMI filter to the ESD pin. For example, if ESD is applied to Pin A1, then clamping voltage is measured at Pin C1.
4. Unused pins are left open.

PERFORMANCE INFORMATION

Typical Filter Performance (nominal conditions unless specified otherwise, 50 Ω Environment)

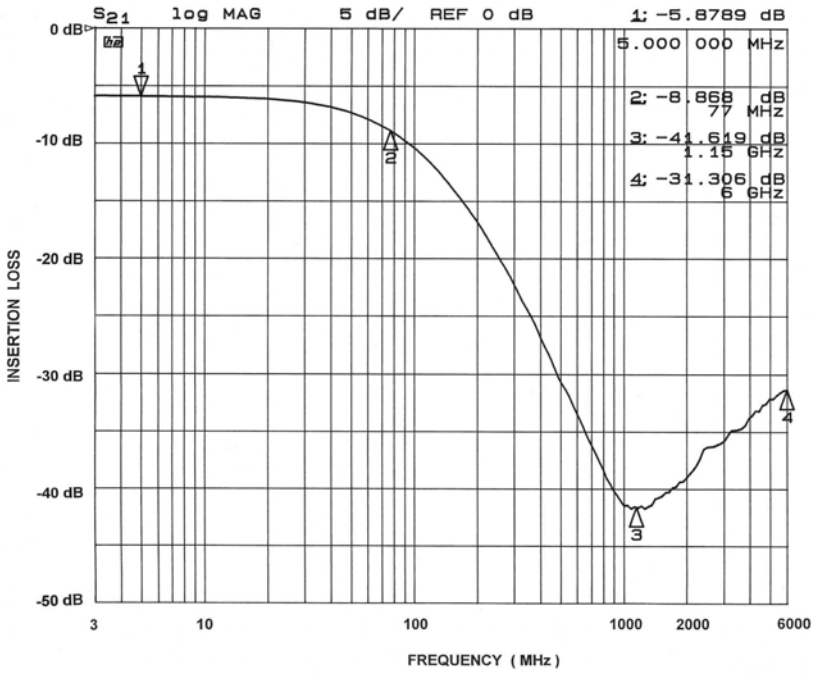

Figure 1. A1−C1 EMI Filter Performance

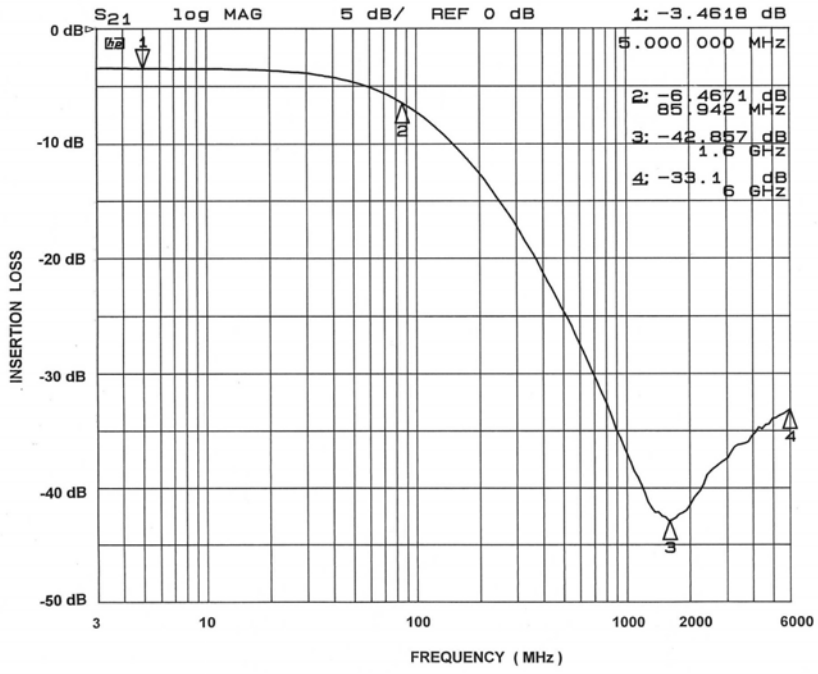

Figure 2. A2−C2 EMI Filter Performance

PERFORMANCE INFORMATION (Cont'd)

Typical Filter Performance (nominal conditions unless specified otherwise, 50 Ω Environment)

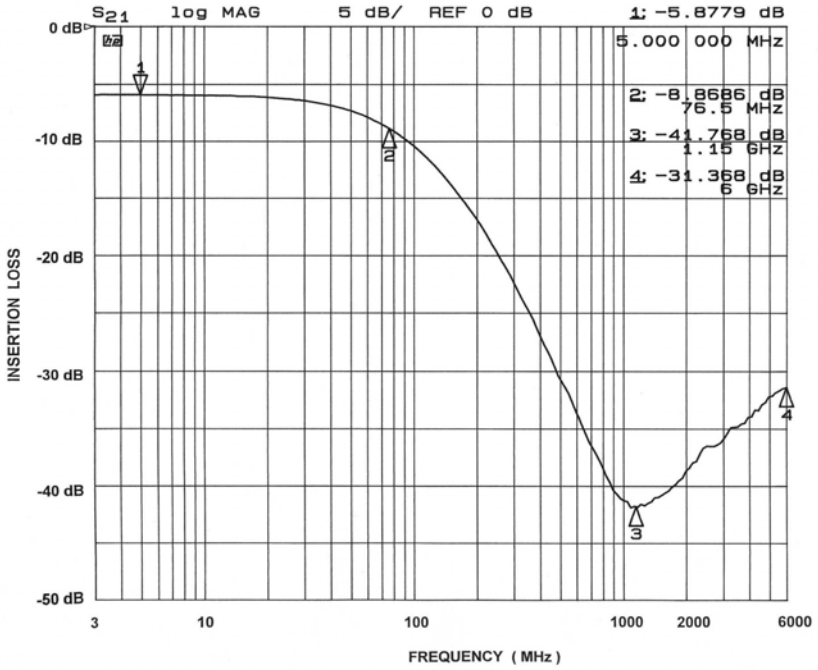

Figure 3. A3−C3 EMI Filter Performance

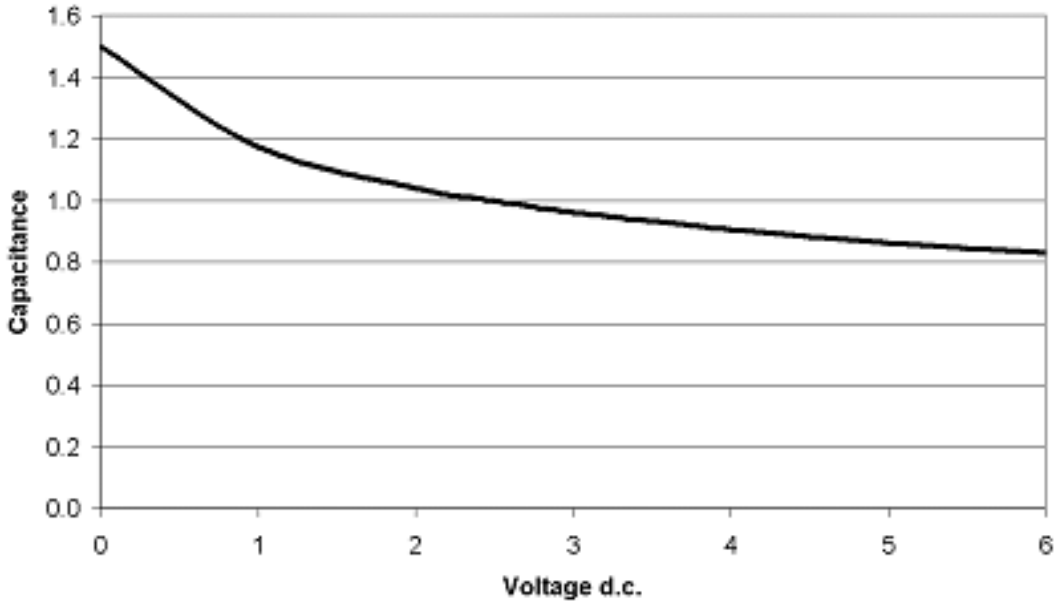

Figure 4. Typical Diode Capacitance vs. Input Voltage (normalized to 2.5 VDC)

APPLICATION INFORMATION

The CM1402 provides a bidirectional filter and protector for all the signals and the power line on the SIM (subscriber identity module) card connector. SIM cards are found in all GSM cellular phones and in some other handheld devices or card readers. The ESD diodes protect the controller against possible ESD strikes that may occur when the connector pins are exposed during direct contact, or during insertion of the SIM card into the card slot. The EMI filter suppresses all high−frequency noise, preventing the unwanted EMI signals from both entering and exiting the main board. The signals that interface with the SIM card are the Reset, the Clock and the bidirectional data I/O, as shown in Typical Application Diagram for the SIM Card Interface.

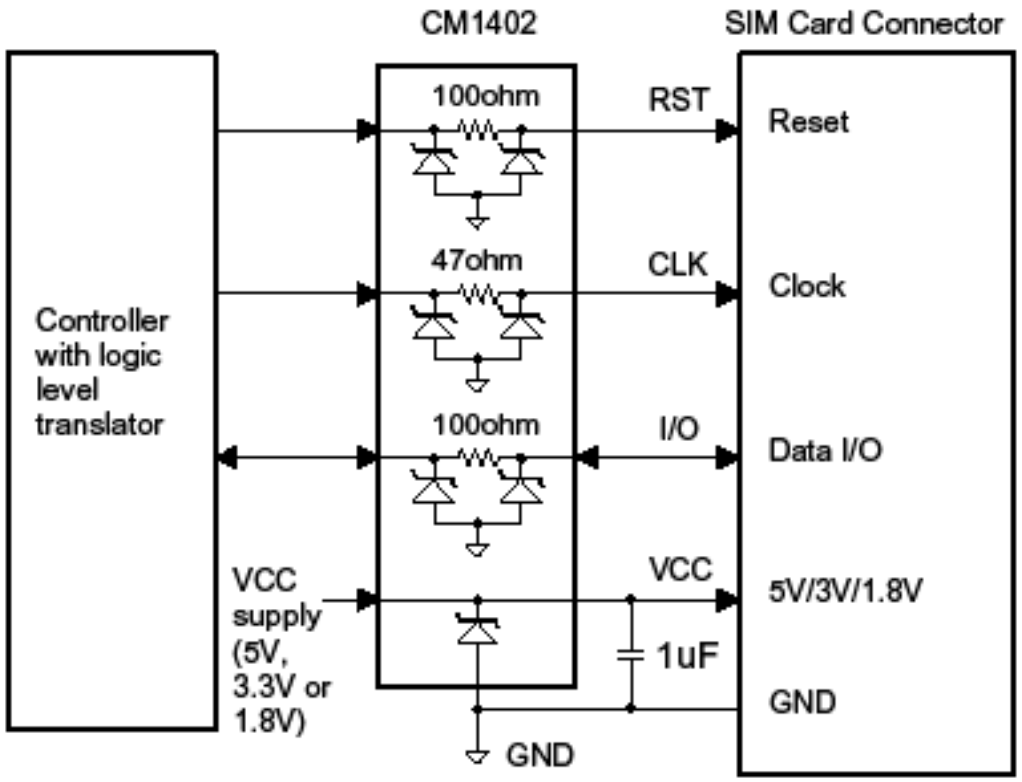

Note: One channel of the CM1402 with a zener diode is not shown on the diagram.

Figure 5. Typical Application Diagram for the SIM Card Interface

For best filter and ESD performance, both GND bumps (B1, B2) of the CM1402 should be directly connected to the Ground plane. A small capacitor of about 1 μF is required next to the V_{CC} pin of the SIM connector in order to improve stability of the SIM card supply rail.

For information on the assembly of the CM1402 to the PCB (printed circuit board), please refer to the Chip Scale Package (CSP) Application Note AP217, or contact factory at 800−282−9855 for technical support.

APPLICATION INFORMATION

Table 5. PRINTED CIRCUIT BOARD RECOMMENDATIONS

Parameter	Value
Pad Size on PCB	0.240 mm
Pad Shape	Round
Pad Definition	Non−Solder Mask defined pads
Solder Mask Opening	0.290 mm Round
Solder Stencil Thickness	0.125 − 0.150 mm
Solder Stencil Aperture Opening (laser cut, 5% tapered walls)	0.300 mm Round
Solder Flux Ratio	50/50 by volume
Solder Paste Type	No Clean
Pad Protective Finish	OSP (Entek Cu Plus 106A)
Tolerance − Edge To Corner Ball	±50 μm
Solder Ball Side Coplanarity	±20 μm
Maximum Dwell Time Above Liquidous (183°C)	60 seconds
Maximum Soldering Temperature for Lead−free Devices using a Lead−free Solder Paste	260°C

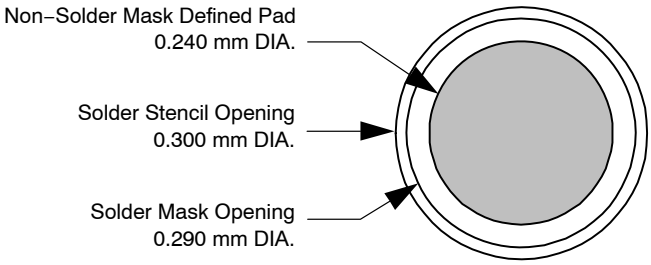

Figure 6. Recommended Non−Solder Mask Defined Pad Illustration

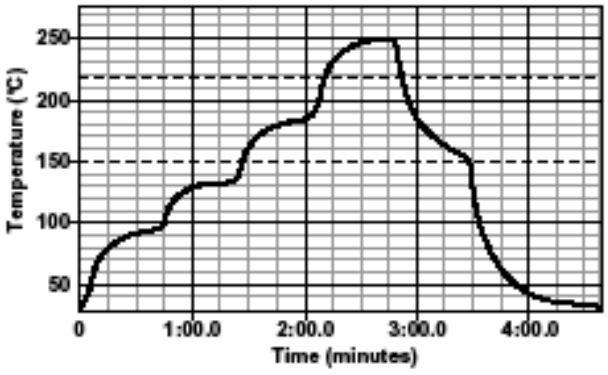

Figure 7. Lead−free (SnAgCu) Solder Ball Reflow Profile



SCALE 4:1

WLCSP10, 1.96x1.33
CASE 567BL
ISSUE O

DATE 26 JUL 2010

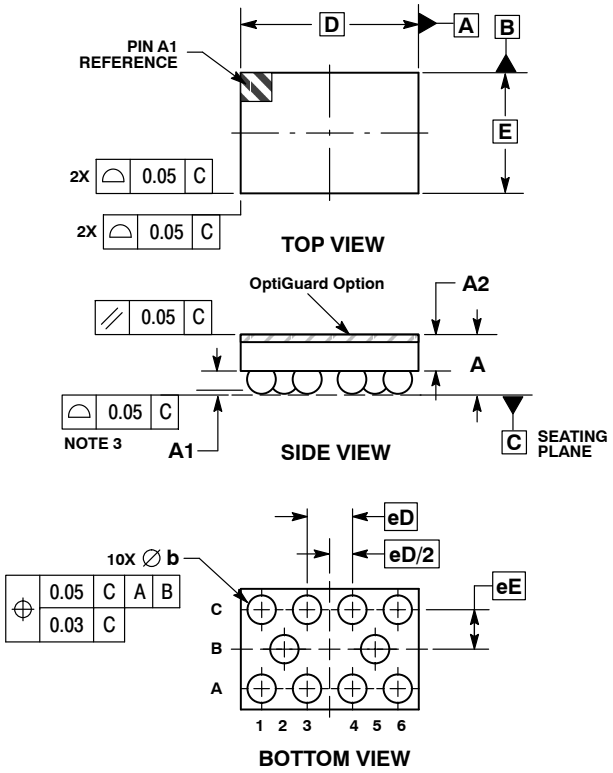

NOTES:
1. DIMENSIONING AND TOLERANCING PER ASME Y14.5M, 1994.
2. CONTROLLING DIMENSION: MILLIMETERS.
3. COPLANARITY APPLIES TO SPHERICAL CROWNS OF SOLDER BALLS.

	MILLIMETERS	
DIM	MIN	MAX
A	0.56	0.72
A1	0.21	0.27
A2	0.40 REF	
b	0.29	0.35
D	1.96 BSC	
E	1.33 BSC	
eD	0.50 BSC	
eE	0.435 BSC	

RECOMMENDED SOLDERING FOOTPRINT*

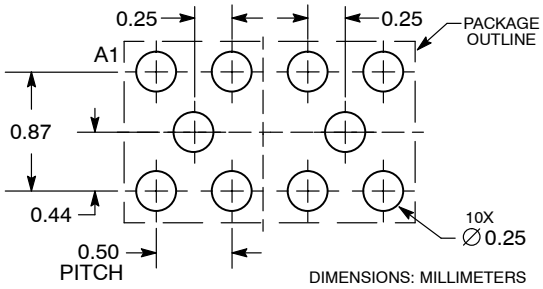

*For additional information on our Pb−Free strategy and soldering details, please download the **onsemi** Soldering and Mounting Techniques Reference Manual, SOLDERRM/D.

DOCUMENT NUMBER:	**98AON49820E**	Electronic versions are uncontrolled except when accessed directly from the Document Repository. Printed versions are uncontrolled except when stamped "CONTROLLED COPY" in red.	
DESCRIPTION:	**WLCSP10, 1.96X1.33**		**PAGE 1 OF 1**

onsemi and onsemi are trademarks of Semiconductor Components Industries, LLC dba **onsemi** or its subsidiaries in the United States and/or other countries. **onsemi** reserves the right to make changes without further notice to any products herein. **onsemi** makes no warranty, representation or guarantee regarding the suitability of its products for any particular purpose, nor does **onsemi** assume any liability arising out of the application or use of any product or circuit, and specifically disclaims any and all liability, including without limitation special, consequential or incidental damages. **onsemi** does not convey any license under its patent rights nor the rights of others.

© Semiconductor Components Industries, LLC, 2010

onsemi, , and other names, marks, and brands are registered and/or common law trademarks of Semiconductor Components Industries, LLC dba "**onsemi**" or its affiliates and/or subsidiaries in the United States and/or other countries. **onsemi** owns the rights to a number of patents, trademarks, copyrights, trade secrets, and other intellectual property. A listing of **onsemi**'s product/patent coverage may be accessed at www.onsemi.com/site/pdf/Patent−Marking.pdf. **onsemi** reserves the right to make changes at any time to any products or information herein, without notice. The information herein is provided "as−is" and **onsemi** makes no warranty, representation or guarantee regarding the accuracy of the information, product features, availability, functionality, or suitability of its products for any particular purpose, nor does **onsemi** assume any liability arising out of the application or use of any product or circuit, and specifically disclaims any and all liability, including without limitation special, consequential or incidental damages. Buyer is responsible for its products and applications using **onsemi** products, including compliance with all laws, regulations and safety requirements or standards, regardless of any support or applications information provided by **onsemi**. "Typical" parameters which may be provided in **onsemi** data sheets and/or specifications can and do vary in different applications and actual performance may vary over time. All operating parameters, including "Typicals" must be validated for each customer application by customer's technical experts. **onsemi** does not convey any license under any of its intellectual property rights nor the rights of others. **onsemi** products are not designed, intended, or authorized for use as a critical component in life support systems or any FDA Class 3 medical devices or medical devices with a same or similar classification in a foreign jurisdiction or any devices intended for implantation in the human body. Should Buyer purchase or use **onsemi** products for any such unintended or unauthorized application, Buyer shall indemnify and hold **onsemi** and its officers, employees, subsidiaries, affiliates, and distributors harmless against all claims, costs, damages, and expenses, and reasonable attorney fees arising out of, directly or indirectly, any claim of personal injury or death associated with such unintended or unauthorized use, even if such claim alleges that **onsemi** was negligent regarding the design or manufacture of the part. **onsemi** is an Equal Opportunity/Affirmative Action Employer. This literature is subject to all applicable copyright laws and is not for resale in any manner.

ADDITIONAL INFORMATION

TECHNICAL PUBLICATIONS:
Technical Library: www.onsemi.com/design/resources/technical−documentation
onsemi Website: www.onsemi.com

ONLINE SUPPORT: www.onsemi.com/support
For additional information, please contact your local Sales Representative at www.onsemi.com/support/sales