# SAC-4P-P12MR/ 3,0-PUR - Sensor/actuator cable

1392755

https://www.phoenixcontact.com/us/products/1392755

Please be informed that the data shown in this PDF document is generated from our online catalog. Please find the complete data in the user documentation. Our general terms of use for downloads are valid.



Sensor/actuator cable, 4-position, PUR halogen-free, black-gray RAL 7021, Plug angled M12 Push Pull, coding: A, on free cable end, cable length: 3 m

## Your advantages

- Easy and safe: 100 % electrically tested plug-in components
- Save time, thanks to installation with push-pull fast locking

## Commercial data

| | |
|---|---|
| Item number | 1392755 |
| Packing unit | 1 pc |
| Minimum order quantity | 1 pc |
| Sales key | BF03 |
| Product key | BF1CCC |
| GTIN | 4063151818128 |
| Weight per piece (including packing) | 93 g |
| Weight per piece (excluding packing) | 87.15 g |
| Customs tariff number | 85444290 |
| Country of origin | PL |

# Technical data

## Product properties

| | |
|---|---|
| Product type | Sensor/actuator cable |
| Application | Standard |
| Number of positions | 4 |
| No. of cable outlets | 1 |
| Shielded | no |
| Coding | A |

### Insulation characteristics

| | |
|---|---|
| Overvoltage category | II |
| Degree of pollution | 3 |

## Material specifications

| | |
|---|---|
| Material | PK |
| Flammability rating according to UL 94 | V0 |
| Seal material | FKM |
| Material of grip body | TPU, hardly inflammable, self-extinguishing |
| Contact material | CuSn |
| Contact surface material | Ni/Au |
| Material for screw connection | Brass, nickel-plated |

## Electrical properties

| | |
|---|---|
| Insulation resistance | ≥ 100 MΩ |
| Nominal voltage $U_N$ | 250 V AC |
| | 250 V DC |
| Nominal current $I_N$ | 4 A |

## Mechanical properties

### Mechanical data

| | |
|---|---|
| Insertion/withdrawal cycles | ≥ 100 |

## Signaling

| | |
|---|---|
| Status display | No |
| Status display present | No |

## Connection data

### Conductor connection

| | |
|---|---|
| Tightening torque | M12 push-pull connectors |

## Connector

### Connection 1

| | |
|---|---|
| Type | Plug angled M12 Push Pull |
| Number of positions | 4 |
| Locking type | Push Pull |
| Coding type | A |

Connection 2

| | |
|---|---|
| Type | free cable end |

## Cable/line

| | |
|---|---|
| Cable length | 3 m |

PUR halogen-free black [PUR]

| | |
|---|---|
| Dimensional drawing | 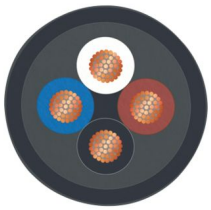 |
| Cable weight | 30 kg/km |
| UL AWM Style | 20549 / 10493 (80°C/300 V) |
| Number of positions | 4 |
| Shielded | no |
| Cable type | PUR halogen-free black [PUR] |
| Conductor structure signal line | 42x 0.10 mm |
| AWG signal line | 22 |
| Conductor cross section | 4x 0.34 mm² (Signal line) |
| Wire diameter incl. insulation | 1.27 mm ±0.02 mm |
| External cable diameter | 4.20 mm ±0.15 mm |
| Outer sheath, material | PUR |
| External sheath, color | black-gray RAL 7021 |
| Conductor material | Bare Cu litz wires |
| Material wire insulation | PP |
| Single wire, color | brown, white, blue, black |
| Thickness, insulation | ≥ 0.21 mm |
| Thickness, outer sheath | approx. 0.50 mm |
| Overall twist | 4 wires, twisted |
| Max. conductor resistance | ≤ 58 Ω/km |
| Insulation resistance | ≥ 1 GΩ*km |
| Nominal voltage, cable | ≤ 300 V |
| Test voltage | ≥ 3000 V |
| Minimum bending radius, fixed installation | 5 x D |
| Minimum bending radius, flexible installation | 10 x D |
| Smallest bending radius, fixed installation | 21 mm |

| | |
|---|---|
| Smallest bending radius, movable installation | 42 mm |
| Max. bending cycles | 10000000 |
| Halogen-free | in accordance with DIN VDE 0472 part 815 |
| | in accordance with DIN EN 50267-2-1 |
| Flame resistance | in accordance with UL 758/1581 FT2 |
| | DIN EN 60332-2-2 (20 s) |
| Resistance to oil | in accordance with DIN EN 60811-2-1 |
| Other resistance | Highly resistant to acids, alkaline solutions and solvents |
| | hydrolysis and microbe resistant |
| | partly UV-resistant (in accordance with DIN EN ISO 4892-2-A) |
| | Low adhesion |
| | abrasion-resistant |
| Special properties | Flexible cable conduit capable |
| | Silicone-free |
| | Free of substances which would hinder coating with paint or varnish |
| | flexible |
| Ambient temperature (operation) | -40 °C ... 80 °C (cable, fixed installation) |
| | -25 °C ... 80 °C (Cable, flexible installation) |

## Environmental and real-life conditions

Ambient conditions

| | |
|---|---|
| Degree of protection | IP65 |
| | IP67 |
| Ambient temperature (operation) | -25 °C ... 85 °C (Plug / socket) |

## Standards and regulations

| | |
|---|---|
| Standard designation | M12-Push-Pull |
| Standards/specifications | IEC 61076-2-010 |

## Drawings

Schematic diagram

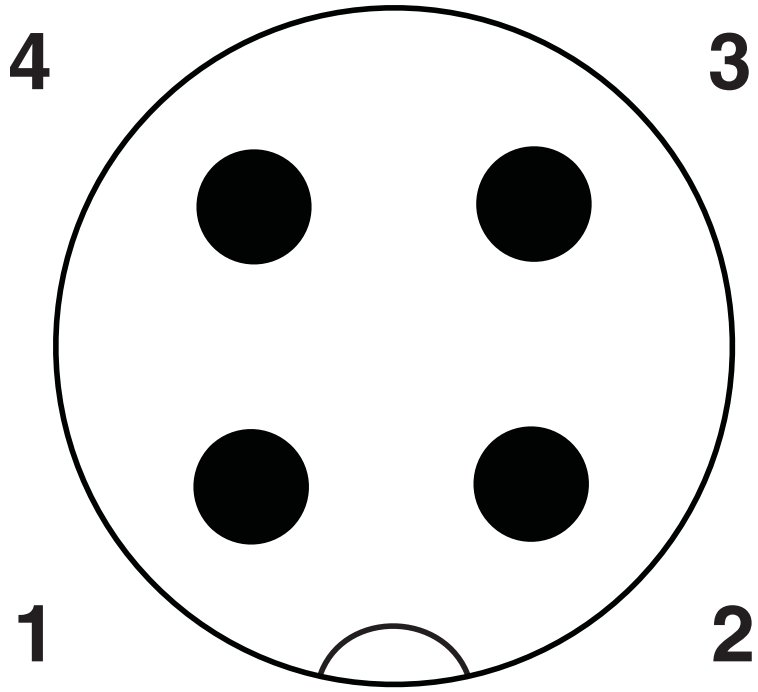


Pin assignment M12 male connector

Circuit diagram

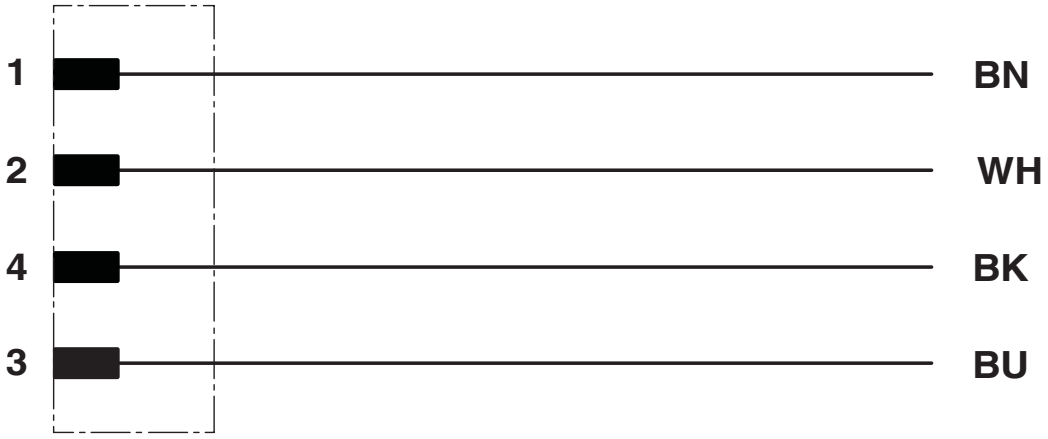

Dimensional drawing

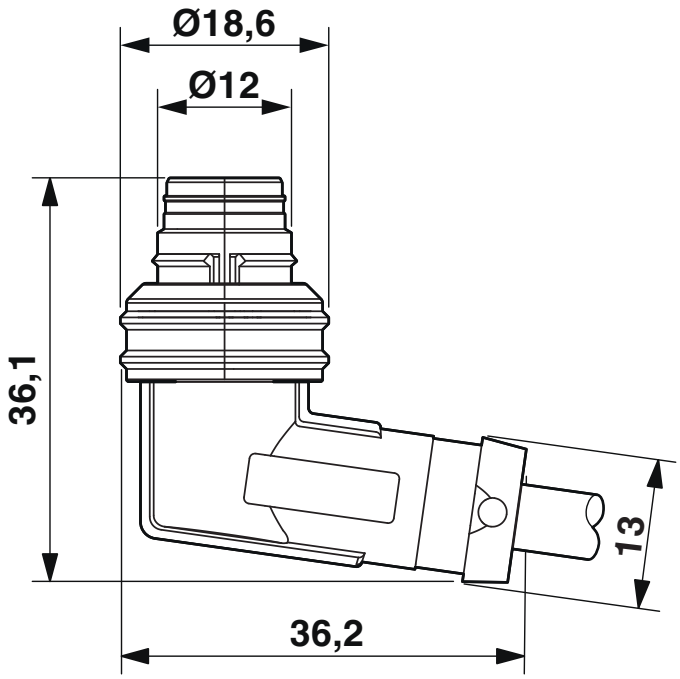


M12 push-pull male connector, angled

## Classifications

### ECLASS

| | |
|---|---|
| ECLASS-11.0 | 27060311 |
| ECLASS-12.0 | 27060311 |
| ECLASS-13.0 | 27060311 |

### ETIM

| | |
|---|---|
| ETIM 9.0 | EC001855 |

### UNSPSC

| | |
|---|---|
| UNSPSC 21.0 | 26121600 |


Phoenix Contact 2024 © - all rights reserved
https://www.phoenixcontact.com



Phoenix Contact USA
586 Fulling Mill Road
Middletown, PA 17057, United States
(+717) 944-1300
info@phoenixcon.com