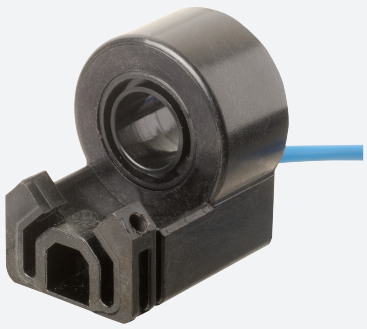

Inductive ring sensor

RC10-14-N3-Y115614

- 10 mm inside diameter
- Bistable
- Direction detection

Dimensions

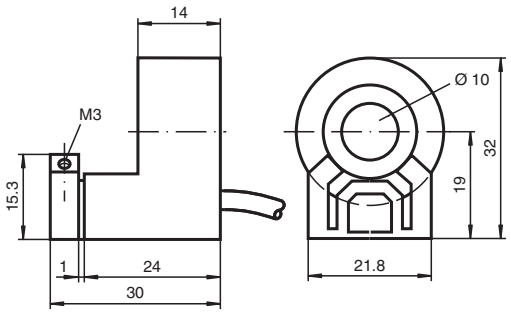

Technical Data

General specifications		
Switching function		Normally closed (NC)
Output type		NAMUR, bistable
Inside diameter		10 mm
Measuring cylinder		
Diameter		1/8" (3.175mm)
Measuring cone		Carboloy
Output type		2-wire
Nominal ratings		
Nominal voltage	U_o	8.2 V (R_i approx. 1 kΩ)
Operating voltage	U_B	5 ... 25 V
Hysteresis	H	typ. 1 %
Reverse polarity protection		reverse polarity protected
Current consumption		
Traverse B		3 mA
Passage B U_B=8V		≥ 3 mA
Passage B U_B=10V		≥ 4.2 mA
Traverse A		1 mA
Passage A U_B=10V		0.5 ... 1 mA typ. 0.9 mA
Passage A U_B=8V		0.5 ... 0.95 mA typ. 0.8 mA
Time delay before availability	t_v	≤ 5 ms
Functional safety related parameters		

Release date: 2025-07-14 Date of issue: 2025-07-14 Filename: 115614_eng.pdf

Technical Data

$MTTF_d$		2140 a
Mission Time (T_M)		20 a
Diagnostic Coverage (DC)		0 %
Compliance with standards and directives		
Standard conformity		
NAMUR		EN 60947-5-6:2000 IEC 60947-5-6:1999
Standards		EN IEC 60947-5-2
Approvals and certificates		
ATEX approval		
Equipment protection level Gb		PTB 99 ATEX 2128 X
UL approval		cULus Listed Load Type: General Purpose Circuitry: Class 2 Power Source Enclosure Type Rating: Type 1 Supply/Switching Voltage: 8.2 V DC
Ambient conditions		
Ambient temperature		0 ... 40 °C (32 ... 104 °F)
Mechanical specifications		
Connection type		cable
Housing material		PBT
Degree of protection		IP67
Cable		
Wire end ferrules		yes
Cable diameter		2.6 mm ± 0.2 mm
Bending radius		> 10 x cable diameter
Material		PVC
Color		blue
Number of cores		2
Core cross section		0.14 mm^2
Length	L	5 m
Dimensions		
Height		32 mm
Width		26 mm
Length		30 mm
General information		
Use in the hazardous area		see instruction manuals

Connection Assignment

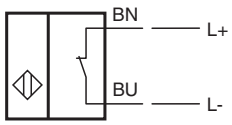

Release date: 2025-07-14 Date of issue: 2025-07-14 Filename: 115614_eng.pdf