HC-1/2M-UT-M-6-PE - Contact insert module

1424439

https://www.phoenixcontact.com/us/products/1424439

Please be informed that the data shown in this PDF document is generated from our online catalog. Please find the complete data in the user documentation. Our general terms of use for downloads are valid.



Contact insert module, Pin, leading, Screw connection, 0.5 mm^2 ... 6 mm^2, application: PE transmission, for housing size HC-EVO-M1

Commercial data

Item number	1424439
Packing unit	1 pc
Minimum order quantity	1 pc
Sales key	BF62
Product key	BF7ACE
Catalog page	Page 595 (C-2-2019)
GTIN	4055626372587
Weight per piece (including packing)	18.3 g
Weight per piece (excluding packing)	17.2 g
Customs tariff number	85366990
Country of origin	CN

Technical data

Notes

General	For HEAVYCON housing type HC-EVO-M1
General	Connectors may be operated only when there is no load/voltage.

Product properties

Product type	Modular contact insert
Series	HC-EVO-M1
Application	PE transmission
Number of positions	1
Contact material type	turned

Connection data

Connection technology

Connection technology	Screw connection

Conductor connection

Conductor cross section	0.5 mm² ... 6 mm²
Connection cross section AWG	20 ... 10
Tightening torque	0.8 Nm ... 1.2 Nm (PE connection)
	0.5 Nm ... 0.8 Nm (Mounting screws for mounting in the HEAVYCON housing)

Dimensions

Dimensional drawing	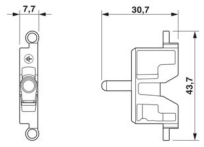
Width	30.9 mm
Height	43.7 mm
Length	7.7 mm
Drill hole distance, horizontal	30.9 mm

Mechanical characteristics

Contact diameter	4 mm

Mechanical properties

Mechanical data

Insertion/withdrawal cycles	≥ 500

Material specifications

Flammability rating according to UL 94	V0

Contact carrier material	Die-cast zinc alloy

Environmental and real-life conditions

Ambient conditions

Ambient temperature (operation)	-40 °C ... 125 °C

Drawings

Dimensional drawing

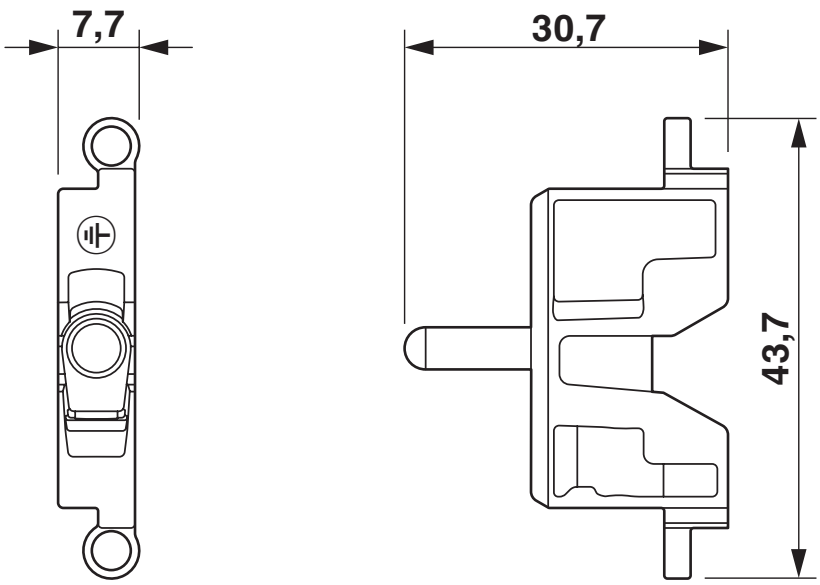

Approvals

To download certificates, visit the product detail page: https://www.phoenixcontact.com/us/products/1424439

EAC
Approval ID: RU C-DE.BL08.B.00511

Classifications

ECLASS

ECLASS-11.0	27440217
ECLASS-12.0	27440217
ECLASS-13.0	27440217

ETIM

ETIM 8.0	EC000438

UNSPSC

UNSPSC 21.0	39121400

Environmental product compliance

EU RoHS

Fulfills EU RoHS substance requirements	Yes
Exemption	6(c)

China RoHS

Environment friendly use period (EFUP)	EFUP-50
	An article-related China RoHS declaration table can be found in the download area for the respective article under "Manufacturer declaration". For all articles with EFUP-E, no China RoHS declaration table issued and required.

EU REACH SVHC

REACH candidate substance (CAS No.)	Lead(CAS: 7439-92-1)
SCIP	7193e353-5506-40dd-aa82-25c8da49b8db

Accessories

HC-CBU-MOD - Coding element

1636130

https://www.phoenixcontact.com/us/products/1636130



Coding socket for coding up to 16 connectors, for HC Modular

HC-CST-MOD - Coding element

1636127

https://www.phoenixcontact.com/us/products/1636127



Coding peg for coding up to 16 connectors, for HC Modular

HC-EVO-M1-HHFS-PLBK - Housing

1424436

https://www.phoenixcontact.com/us/products/1424436



Sleeve housing, plastic, with bayonet flange for EVO-D screw connection, M1, for single locking latch, for modular contact inserts with single module width, without EVO screw connection

HC-M-B06-MFH-B - Module carrier frame

1182085

https://www.phoenixcontact.com/us/products/1182085



Module carrier frame, size: B6, type : for the panel mounting side (a, b, c, ...), 4 mm^2 ... 6 mm^2, application: Module carrier frame

HC-M-B10-MFH-B - Module carrier frame

1182088

https://www.phoenixcontact.com/us/products/1182088



Module carrier frame, size: B10, type : for the panel mounting side (a, b, c, ...), 4 mm^2 ... 6 mm^2, application: Module carrier frame

HC-M-B16-MFH-B - Module carrier frame

1182090

https://www.phoenixcontact.com/us/products/1182090



Module carrier frame, size: B16, type : for the panel mounting side (a, b, c, ...), 4 mm^2 ... 6 mm^2, application: Module carrier frame

HC-M-B24-MFH-B - Module carrier frame

1182094

https://www.phoenixcontact.com/us/products/1182094



Module carrier frame, size: B24, type : for the panel mounting side (a, b, c, ...), 4 mm^2 ... 6 mm^2, application: Module carrier frame

HC-M-B06-MFH-H - Module carrier frame

1182087

https://www.phoenixcontact.com/us/products/1182087



Module carrier frame, size: B6, type : for the sleeve side (A, B, C, ...), 4 mm^2 ... 6 mm^2, application: Module carrier frame

HC-M-B10-MFH-H - Module carrier frame

1182089

https://www.phoenixcontact.com/us/products/1182089

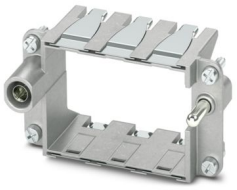

Module carrier frame, size: B10, type : for the sleeve side (A, B, C, ...), 4 mm^2 ... 6 mm^2, application: Module carrier frame

HC-M-B16-MFH-H - Module carrier frame

1182093

https://www.phoenixcontact.com/us/products/1182093



Module carrier frame, size: B16, type : for the sleeve side (A, B, C, ...), 4 mm^2 ... 6 mm^2, application: Module carrier frame

HC-M-B24-MFH-H - Module carrier frame

1182095

https://www.phoenixcontact.com/us/products/1182095



Module carrier frame, size: B24, type : for the sleeve side (A, B, C, ...), 4 mm^2 ... 6 mm^2, application: Module carrier frame

HC-1/2M-UT-F-6-PE - Contact insert module

1424438

https://www.phoenixcontact.com/us/products/1424438



Contact insert module, Socket, Screw connection, 0.5 mm^2 ... 6 mm^2, application: PE transmission, for housing size HC-EVO-M1

SF-PH 1-80 - Screwdriver

1212559

https://www.phoenixcontact.com/us/products/1212559



Screwdriver, PH crosshead (lasered), uninsulated, size: PH 1 x 80, 2-component grip, with non-slip grip

SF-SL 0,6X3,5-100 - Screwdriver

1212549

https://www.phoenixcontact.com/us/products/1212549



Screwdriver, bladed (lasered), size: 0.6 x 3.5 x 100 mm, 2-component grip, with non-slip grip

Phoenix Contact 2024 © - all rights reserved
https://www.phoenixcontact.com

Phoenix Contact USA
586 Fulling Mill Road
Middletown, PA 17057, United States
(+717) 944-1300
info@phoenixcon.com