CUDEVICES

SERIES: TS19 | DESCRIPTION: TACTILE SWITCH

FEATURES

- surface mount
- IP67
- 100K & 300K life cycle options



RoHS

SPECIFICATIONS

parameter	conditions/description	min	typ	max	units
rated voltage		1		12	Vdc
rated current		0.01		50	mA
withstanding voltage	for 1 minute		100		Vac
contact resistance	applying load of 2 times operating force at 5 Vdc, 10 mA			500	mΩ
insulation resistance	at 100 Vdc for 1 minute	100			MΩ
operating force	see force table				
actuator travel	70 gf models 120 gf models 180 & 240 gf models	0.05 0.06 0.08	0.10 0.11 0.13	0.15 0.16 0.18	mm mm mm
operating temperature		-30		85	°C
storage temperature		-40		90	°C
life	rated load, 60 cycles/min, 1.5 times operating force 100,000 cycle models 300,000 cycle models		 100,000 300,000		 cycles cycles
vibration	10~55~10 Hz, 1.5 mm amplitude, 2 hours on each XYZ				
flammability rating	see material table				
RoHS	yes				
IP level	IP67				

PART NUMBER KEY

TS19 - 32 - 06 - BK - XXX - X - SMT - TR -67

- TS19 - 32: Base Number
- XXX: Push Force:
  - *70 = 70 gf
  - 120 = 120 gf
  - 180 = 180 gf
  - 240 = 240 gf
- X: Life Cycles:
  - 1=100,000 cycles
  - 3=300,000 cycles

Note: *Only available with 100,000 cycle life.

MECHANICAL DRAWING

units: mm
tolerance: ±0.1 mm
unless otherwise noted

ITEM	DESCRIPTION	MATERIAL	PLATING/COLOR
1	membrane	PA	natural
2	push	PA	black
3	contacts	SUS	silver
4	case	PA	black
5	terminals	copper	silver

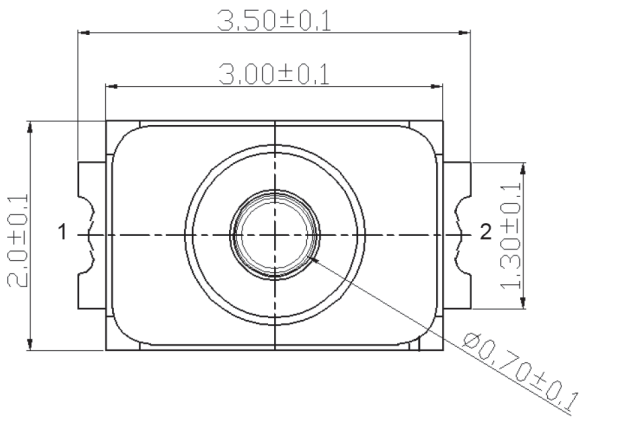

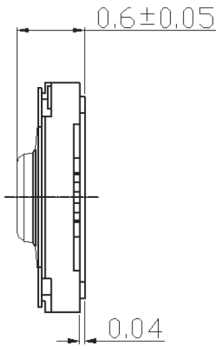

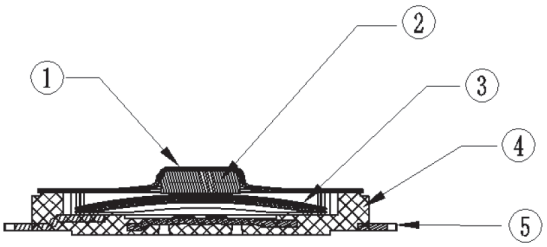

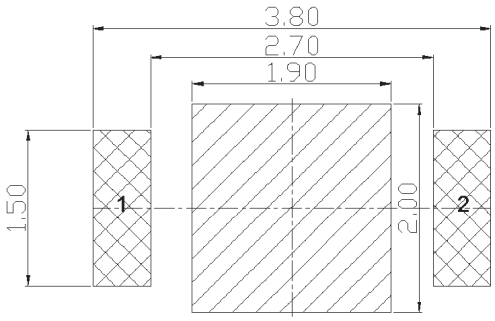

: Land Pattern Area

: Brazing Prohibited Area

Recommended PCB Layout
Top View

ACTUATOR POSITION [ ]: MOMENTARY	
NORMAL	DOWN
OFF	[ON]
SCHEMATIC	

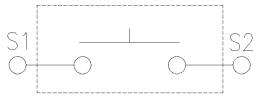

Operating Force Table		
Model	Press Force [gf]	Return Force [gf]
70	70±50	>20
120	120±50	>20
180	180±50	>20
240	240±50	>20

SOLDERABILITY

parameter	conditions/description	min	typ	max	units
hand soldering	for maximum 3 seconds			350	°C
reflow soldering[1]	see reflow profile			260	°C

Notes: 1. Do not exceed 2 reflow cycles.

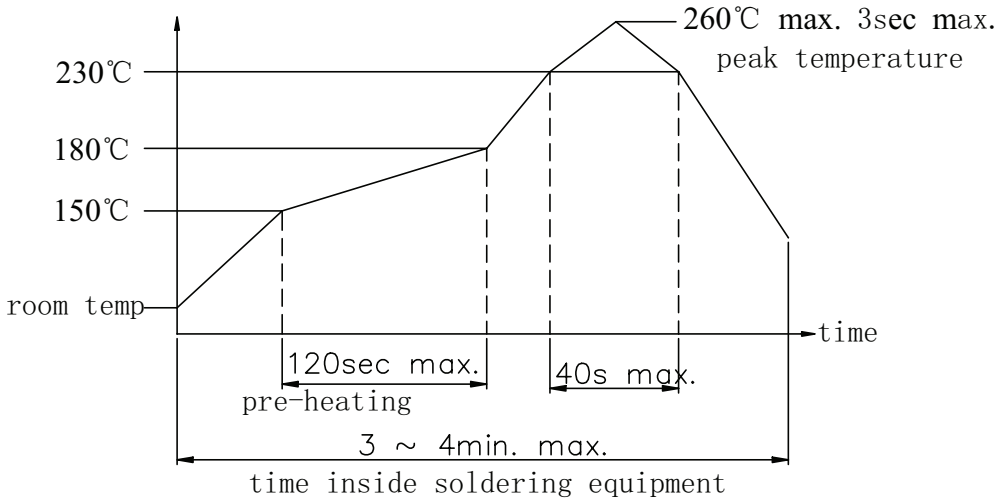

PACKAGING

units: mm

Reel Size: Ø330 mm
Reel QTY: 15,000 pcs per reel
Carton Size: 440 x 350 x 350 mm
Carton QTY: 225,000 pcs per carton

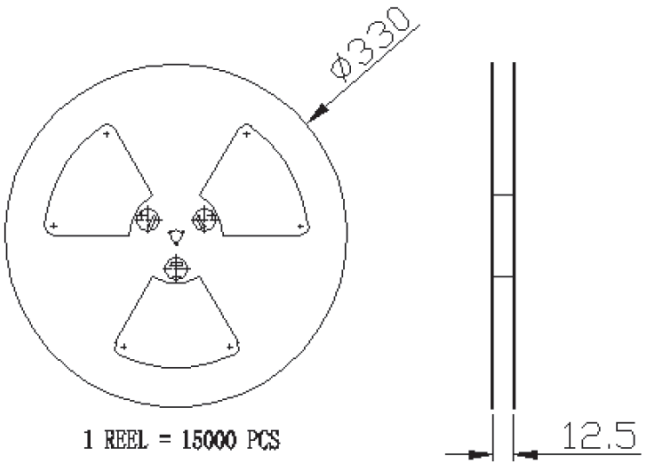

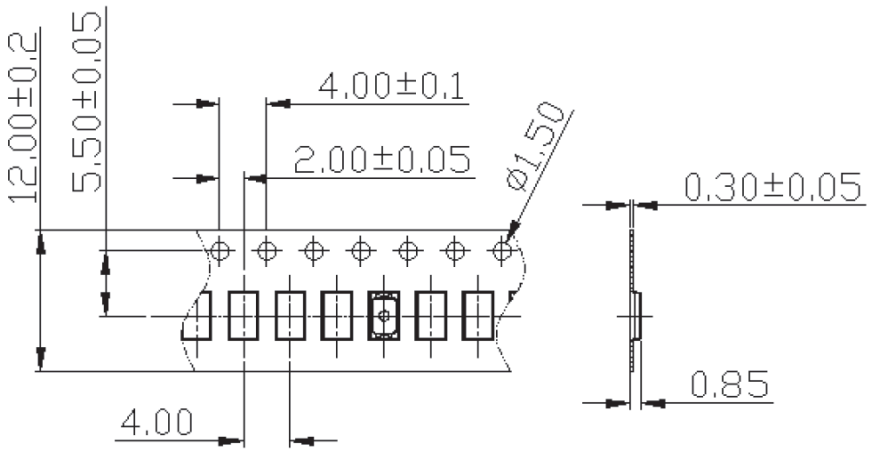

REVISION HISTORY

rev.	description	date
1.0	initial release	05/10/2022
1.01	logo, datasheet style update	08/05/2022

The revision history provided is for informational purposes only and is believed to be accurate.

CUI Devices offers a one (1) year limited warranty. Complete warranty information is listed on our website.

CUI Devices reserves the right to make changes to the product at any time without notice. Information provided by CUI Devices is believed to be accurate and reliable. However, no responsibility is assumed by CUI Devices for its use, nor for any infringements of patents or other rights of third parties which may result from its use.

CUI Devices products are not authorized or warranted for use as critical components in equipment that requires an extremely high level of reliability. A critical component is any component of a life support device or system whose failure to perform can be reasonably expected to cause the failure of the life support device or system, or to affect its safety or effectiveness.

cuidevices.com