SIEMENS

Data sheet 3RV2411-0AA20



Circuit breaker size S00 for transformer protection A-release 0.11...0.16 A N-release 3.3 A Spring-type terminal Standard switching capacity

product brand name	SIRIUS
product designation	Circuit breaker
design of the product	For transformer protection
product type designation	3RV2
General technical data	
size of the circuit-breaker	S00
size of contactor can be combined company-specific	S00, S0
product extension auxiliary switch	Yes
power loss [W] for rated value of the current	
● at AC in hot operating state	5.5 W
● at AC in hot operating state per pole	1.8 W
insulation voltage with degree of pollution 3 at AC rated value	690 V
surge voltage resistance rated value	6 kV
shock resistance according to IEC 60068-2-27	25g / 11 ms
mechanical service life (operating cycles)	
● of the main contacts typical	100 000
● of auxiliary contacts typical	100 000
electrical endurance (operating cycles) typical	100 000
reference code according to IEC 81346-2	Q
Substance Prohibitance (Date)	10/01/2009
Ambient conditions	
installation altitude at height above sea level maximum	2 000 m
ambient temperature	
● during operation	-20 ... +60 °C
● during storage	-50 ... +80 °C
● during transport	-50 ... +80 °C
relative humidity during operation	10 ... 95 %
Main circuit	
number of poles for main current circuit	3
adjustable current response value current of the current-dependent overload release	0.11 ... 0.16 A
operating voltage	
● rated value	20 ... 690 V
● at AC-3 rated value maximum	690 V
● at AC-3e rated value maximum	690 V
operating frequency rated value	50 ... 60 Hz
operational current rated value	0.16 A
operational current	
● at AC-3 at 400 V rated value	0.16 A
● at AC-3e at 400 V rated value	0.16 A

Subject to change without notice
© Copyright Siemens

operating power	
● at AC-3	
— at 230 V rated value	0 kW
— at 400 V rated value	0 kW
— at 500 V rated value	0.1 kW
— at 690 V rated value	0.1 kW
● at AC-3e	
— at 230 V rated value	0 kW
— at 400 V rated value	0 kW
— at 500 V rated value	0.1 kW
— at 690 V rated value	0.1 kW
operating frequency	
● at AC-3 maximum	15 1/h
● at AC-3e maximum	15 1/h
Auxiliary circuit	
number of NC contacts for auxiliary contacts	0
number of NO contacts for auxiliary contacts	0
number of CO contacts for auxiliary contacts	0
Protective and monitoring functions	
product function	
● ground fault detection	No
● phase failure detection	Yes
trip class	CLASS 10
design of the overload release	thermal
maximum short-circuit current breaking capacity (Icu)	
● at AC at 240 V rated value	100 kA
● at AC at 400 V rated value	100 kA
● at AC at 500 V rated value	100 kA
● at AC at 690 V rated value	100 kA
operating short-circuit current breaking capacity (Ics) at AC	
● at 240 V rated value	100 kA
● at 400 V rated value	100 kA
● at 500 V rated value	100 kA
● at 690 V rated value	100 kA
response value current of instantaneous short-circuit trip unit	3.3 A
UL/CSA ratings	
full-load current (FLA) for 3-phase AC motor	
● at 480 V rated value	0.16 A
● at 600 V rated value	0.16 A
Short-circuit protection	
product function short circuit protection	Yes
design of the short-circuit trip	magnetic
Installation/ mounting/ dimensions	
mounting position	any
fastening method	screw and snap-on mounting onto 35 mm DIN rail according to DIN EN 60715
height	106 mm
width	45 mm
depth	97 mm
required spacing	
● with side-by-side mounting at the side	0 mm
● for grounded parts at 400 V	
— downwards	30 mm
— upwards	30 mm
— at the side	9 mm
● for live parts at 400 V	
— downwards	30 mm
— upwards	30 mm
— at the side	9 mm
● for grounded parts at 500 V	
— downwards	30 mm

Subject to change without notice
© Copyright Siemens

— upwards	30 mm
— at the side	9 mm
● for live parts at 500 V	
— downwards	30 mm
— upwards	30 mm
— at the side	9 mm
● for grounded parts at 690 V	
— downwards	50 mm
— upwards	50 mm
— backwards	0 mm
— at the side	30 mm
— forwards	0 mm
● for live parts at 690 V	
— downwards	50 mm
— upwards	50 mm
— backwards	0 mm
— at the side	30 mm
— forwards	0 mm
Connections/ Terminals	
type of electrical connection	
● for main current circuit	spring-loaded terminals
arrangement of electrical connectors for main current circuit	Top and bottom
type of connectable conductor cross-sections	
● for main contacts	
— solid or stranded	2x (0,5 ... 4 mm²)
— finely stranded with core end processing	2x (0.5 ... 2.5 mm²)
— finely stranded without core end processing	2x (0.5 ... 2.5 mm²)
● for AWG cables for main contacts	2x (20 ... 12)
design of screwdriver shaft	Diameter 3 mm
size of the screwdriver tip	3,0 x 0,5 mm
Safety related data	
B10 value	
● with high demand rate according to SN 31920	5 000
proportion of dangerous failures	
● with low demand rate according to SN 31920	50 %
● with high demand rate according to SN 31920	50 %
failure rate [FIT]	
● with low demand rate according to SN 31920	50 FIT
T1 value for proof test interval or service life according to IEC 61508	10 a
protection class IP on the front according to IEC 60529	IP20
touch protection on the front according to IEC 60529	finger-safe, for vertical contact from the front
display version for switching status	Handle
Certificates/ approvals	

General Product Approval					Declaration of Conformity
Confirmation	CCC	UL	KC	EAC	CE EG-Konf.

Declaration of Conformity	Test Certificates		Marine / Shipping		
UKCA	Type Test Certificates/Test Report	Special Test Certificate	ABS	BUREAU VERITAS	DNV

Subject to change without notice
© Copyright Siemens

Marine / Shipping	other	Railway
LRS PRS RINA	Confirmation VDE	Vibration and Shock

Railway
Confirmation

Further information

Siemens has decided to exit the Russian market (see here).
https://press.siemens.com/global/en/pressrelease/siemens-wind-down-russian-business
Siemens is working on the renewal of the current EAC certificates.
Please contact your local Siemens office on the status of validity of the EAC certification if you intend to import or offer to supply these products to an EAC relevant market (other than the sanctioned EAEU member states Russia or Belarus).
Information on the packaging
https://support.industry.siemens.com/cs/ww/en/view/109813875
Information- and Downloadcenter (Catalogs, Brochures,…)
https://www.siemens.com/ic10
Industry Mall (Online ordering system)
https://mall.industry.siemens.com/mall/en/en/Catalog/product?mlfb=3RV2411-0AA20
Cax online generator
http://support.automation.siemens.com/WW/CAXorder/default.aspx?lang=en&mlfb=3RV2411-0AA20
Service&Support (Manuals, Certificates, Characteristics, FAQs,...)
https://support.industry.siemens.com/cs/ww/en/ps/3RV2411-0AA20
Image database (product images, 2D dimension drawings, 3D models, device circuit diagrams, EPLAN macros, ...)
http://www.automation.siemens.com/bilddb/cax_de.aspx?mlfb=3RV2411-0AA20&lang=en
Characteristic: Tripping characteristics, I²t, Let-through current
https://support.industry.siemens.com/cs/ww/en/ps/3RV2411-0AA20/char
Further characteristics (e.g. electrical endurance, switching frequency)
http://www.automation.siemens.com/bilddb/index.aspx?view=Search&mlfb=3RV2411-0AA20&objecttype=14&gridview=view1

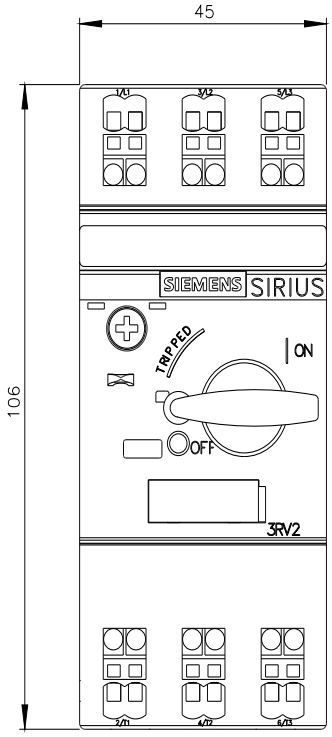

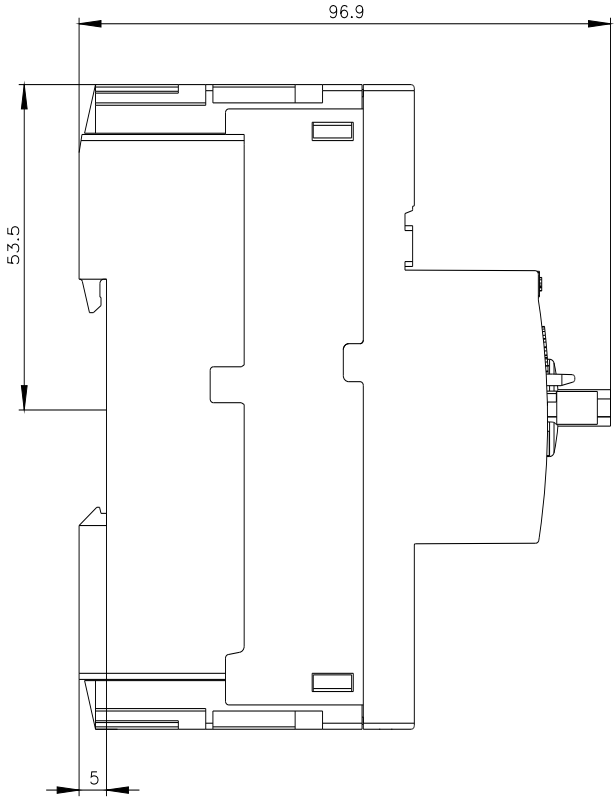

© Copyright Siemens

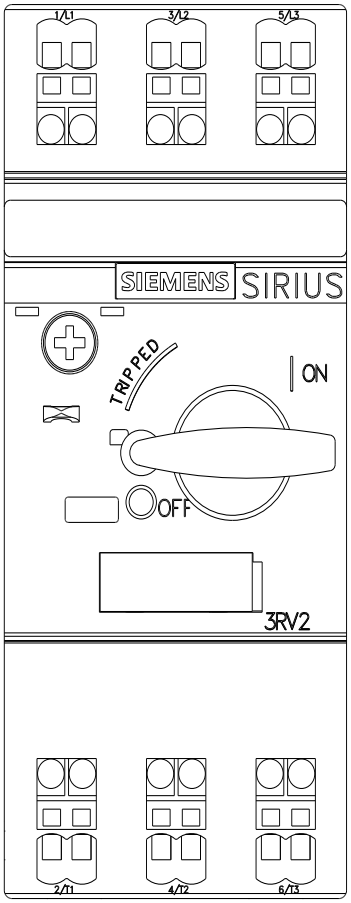

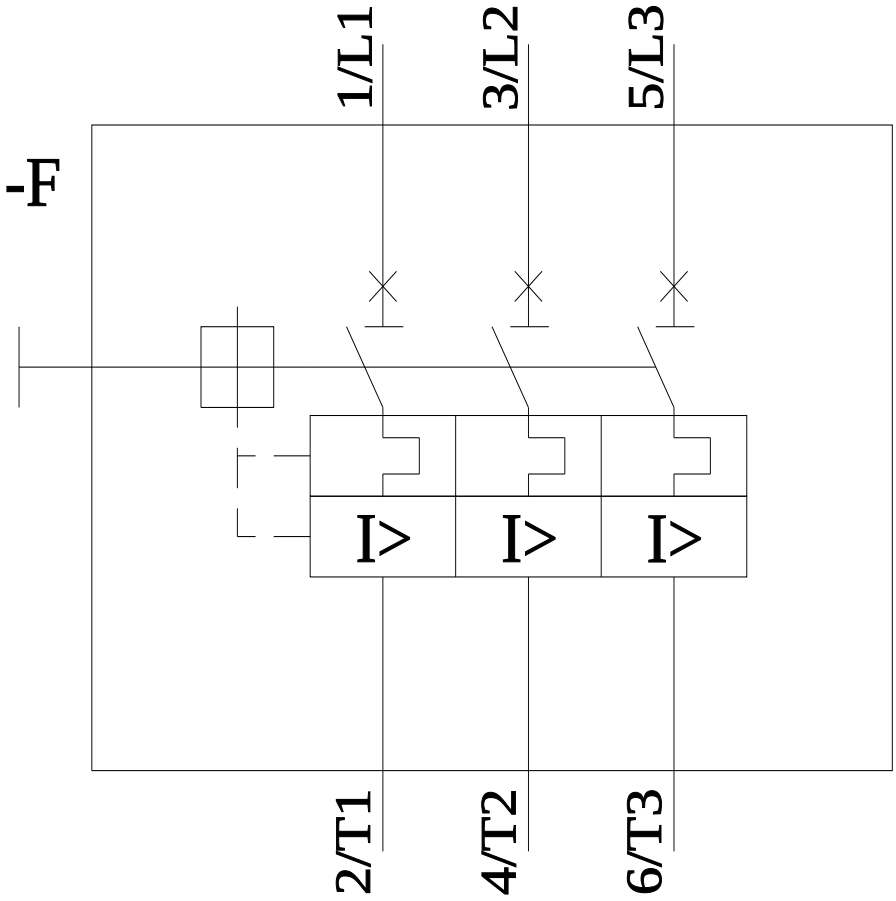

last modified: 11/21/2022

Subject to change without notice
© Copyright Siemens