CK4,0-ED-2,50ST AG - Crimp contact

1663242

https://www.phoenixcontact.com/us/products/1663242

Please be informed that the data shown in this PDF document is generated from our online catalog. Please find the complete data in the user documentation. Our general terms of use for downloads are valid.



Crimp contact, contact diameter: 4 mm, turned, Pin, contact material: Copper alloy, contact surface: silver-plated, connection cross section: 2.5 mm^2 ... 2.5 mm^2, AWG 14

Commercial data

Item number	1663242
Packing unit	25 pc
Minimum order quantity	25 pc
Sales key	BF65
Product key	BF7AIE
Catalog page	Page 511 (C-2-2019)
GTIN	4017918123055
Weight per piece (including packing)	3 g
Weight per piece (excluding packing)	3 g
Customs tariff number	85366990
Country of origin	DE

Technical data

Notes

General	for HC-M-02, HC-M-03, HC-M-03/04, HC-M-04, HC-Q02, HC-Q03, HC-Q04, and HC-COM-Q4/2 contact carriers

Mounting

Assembly instructions	The quality of a crimp connection is determined by DIN EN 60352-2.

Product properties

Product type	Crimp contact
Series	HC-M-03
	HC-M-03/04
	HC-M-04
	HC-K
	HC-M-02
	HC-HS
	HC-COM
Type	Individual male contact
Contact material type	turned

Connection data

Connection method	Crimp connection
Contact connection type	Pin
Connection technology	Crimp connection
Conductor cross section	2.5 mm² ... 2.5 mm²
Connection cross section AWG	14
Stripping length of the individual wire	9 mm
Conductor cross section flexible	2.5 mm² ... 2.5 mm²

Material specifications

Contact material	Copper alloy
Contact surface material	silver-plated

Dimensions

Mechanical characteristics

Contact diameter	4 mm

Mechanical properties

Mechanical data

Insertion/withdrawal cycles	≥ 500

Environmental and real-life conditions

Ambient conditions

Ambient temperature (operation)	-40 °C ... 125 °C

Drawings

Dimensional drawing

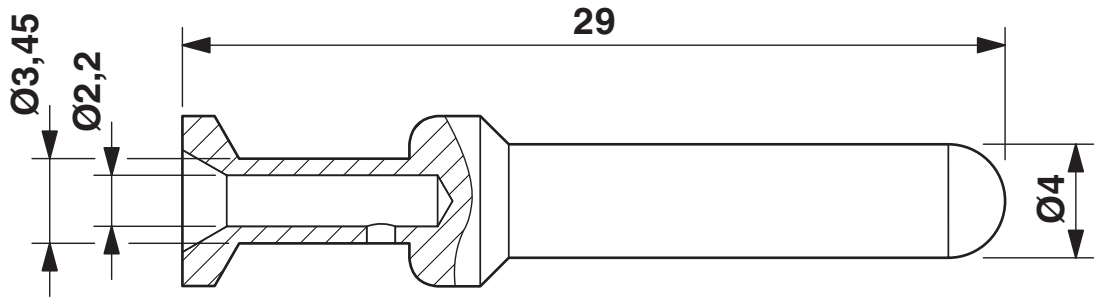

Dimensional drawing

Approvals

To download certificates, visit the product detail page: https://www.phoenixcontact.com/us/products/1663242

EAC
Approval ID: RU C-DE.AI30.B.01102

EAC
Approval ID: EAC-Zulassung

Classifications

ECLASS

ECLASS-11.0	27440204
ECLASS-12.0	27440204
ECLASS-13.0	27440204

ETIM

ETIM 9.0	EC000796

UNSPSC

UNSPSC 21.0	39121500

Environmental product compliance

EU RoHS

Fulfills EU RoHS substance requirements	Yes
Exemption	6(c)

China RoHS

Environment friendly use period (EFUP)	EFUP-E
	No hazardous substances above the limits

EU REACH SVHC

REACH candidate substance (CAS No.)	Lead(CAS: 7439-92-1)
SCIP	9c0c62c7-11bc-4465-98ce-b495da4c84a0

Accessories

CK4,0-ED-2,50BU AG - Crimp contact

1663284

https://www.phoenixcontact.com/us/products/1663284



Crimp contact, contact diameter: 4 mm, turned, Socket, contact material: Copper alloy, contact surface: silver-plated, connection cross section: 2.5 mm^2 ... 2.5 mm^2, AWG 14

CRIMPFOX-TC MP-6 - Crimping pliers with digital display

1202888

https://www.phoenixcontact.com/us/products/1202888



Crimping tool, for turned contacts, universal cross-section setting, up to a maximum of 6.0 mm^2, digital display with 0.01 mm increments, pressure lock can be unlocked, positioning tool necessary as an accessory for contact positioning

CRIMPFOX-TC HC 4 - Crimping pliers

1297083

https://www.phoenixcontact.com/us/products/1297083



Crimping pliers, for CK 1,6-ED..., CK 2,5-ED..., CK 4,0-ED... turned contacts, 4 marked die stations, unlockable pressure lock, lateral entry, incl. positioning tool

UNIFOX RT-CK 4.0 - Contact removal tool

1072064

https://www.phoenixcontact.com/us/products/1072064



Contact removal tool, for rotated CK-4,0-... contacts

CK4,0-ED-2,50ST AG - Crimp contact

1663242

https://www.phoenixcontact.com/us/products/1663242

CF 500/DIE TC HC 4 - Crimp insert

1324132

https://www.phoenixcontact.com/us/products/1324132

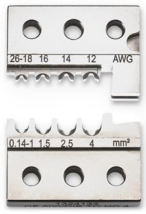

Die for CF 500 automatic crimping device, CK 1,6-ED..., CK 2,5-ED..., CK 4,0-ED... turned contacts, 4 marked die stations

Phoenix Contact 2024 © - all rights reserved
https://www.phoenixcontact.com

Phoenix Contact USA
586 Fulling Mill Road
Middletown, PA 17057, United States
(+717) 944-1300
info@phoenixcon.com