PRODUCT CATALOG

HIROSE ELECTRIC CO.,LTD.

QR/P8 Series

Ultra-compact, Rectangular, High Pin Count, Rack and Panel Crimp Connector

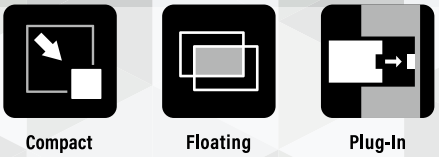

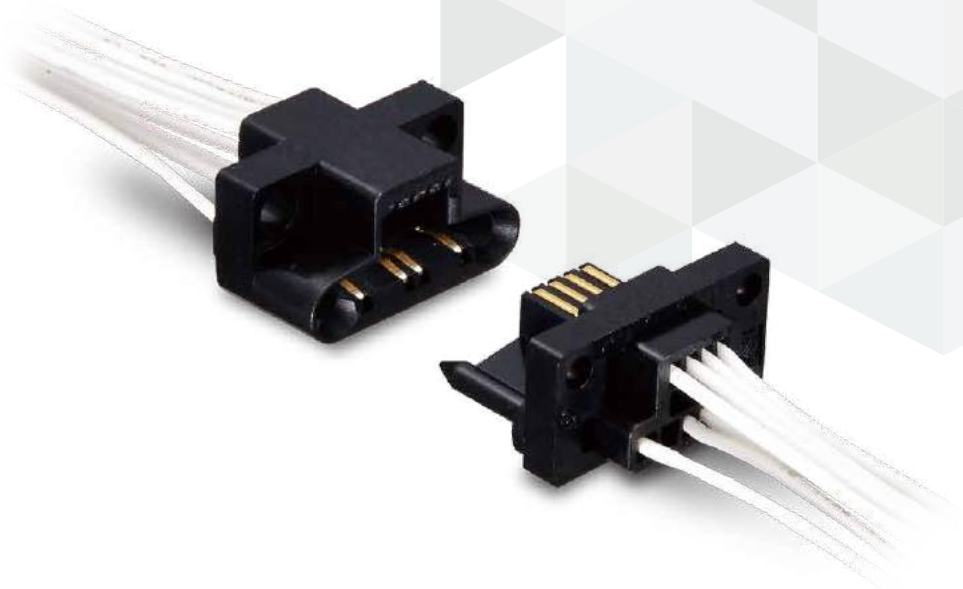

Aug.1.2025 Copyright 2025 HIROSE ELECTRIC CO., LTD. All Rights Reserved.

Dec. 2021 ①

Overview

The QR/P8 Series is a more compact version of the rectangular, multi-pin count and plug-in connection QR/P, QR/P1 and QR/P4 Series for racks and panels, which have been well received in the market.
Three different pin counts are available: 8, 12 and 20. Wire connection is performed using crimp termination for easier connection and higher reliability.

Features

1. Smaller size with the same number of pin counts as the QR/P4 Series (20% reduction)

2. The guide pin and housing are molded into one piece for space-saving.

3. Use of stepped screws enables a floating design.

4. UL, CSA, TÜV certified.

Aug.1.2025 Copyright 2025 HIROSE ELECTRIC CO., LTD. All Rights Reserved.

Product Specifications

Operating Temperature	-10 to +60℃	
Rated Current	Power	3A Max. (When using 20 AWG)
	Signal	2A Max. (When using 24 AWG)
Rated Voltage	Power	300V AC
	Signal	30V AC
Contact Resistance	30mΩ Max. at 1A DC	
Insulation Resistance	1000MΩ Min. at 500V DC	
Withstand Voltage	Power	2000V AC for 1 min.
	Signal	500V AC for 1 min.

Safety Standard			UL, CSA	TÜV
Operating Temperature			-10 to +60℃	
Rated Current	20 AWG		3A	2.5A
	22 AWG			1A
	24 AWG	Power	2A	
		Signal		
	26 AWG		1A	
	28 AWG			
Rated Voltage	Power		300V AC	380V AC
	Signal		30V AC	30V AC

Materials / Finish

Item	Material	Color / Finish	Remarks
Insulator	Polycarbonate	Black	UL94V-0
Contact	Phosphor Bronze	Partial Gold Plating (Nickel Underplating)	–

Aug.1.2025 Copyright 2025 HIROSE ELECTRIC CO., LTD. All Rights Reserved.

Product Number Structure

Refer to the chart below when determining the product specifications from the product number.
Please select from the product numbers listed in this catalog when placing orders.

Connector Unit

QR/P8 - 12 P - C (21)
❶ ❷ ❸ ❹ ❺

Contact

QR/P8 - PC - 1 1 1
❶ ❻ ❼ ❽ ❾

❶ Series Name	QR/P8	❻ Contact Gender	PC : Male Crimp Contact SC : Female Crimp Contact
❷ No. of Pos.	8, 12, 20	❼ Contact Type	1 : Loose Contact 2 : Reel Contact
❸ Insulator Gender	P : Male Insulation Case S : Female Insulation Case	❽ Applicable Cable	1 : Thick Cable 20 to 24 AWG ・・・2 contact holes on both sides 2 : Thin Cable 24 to 28 AWG
❹ Contact Connection Method	C : Crimp Connection	❾ Surface Treatment	1 : Partial Gold Plating (Nickel Underplating)
❺ Specification	(21) : UL, CSA, TÜV		

Aug.1.2025 Copyright 2025 HIROSE ELECTRIC CO., LTD. All Rights Reserved.

Housing

Male Housing



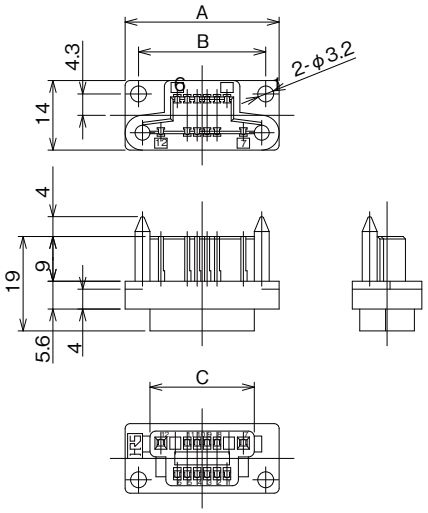

Unit : mm

Part No.	HRS No.	No. of Pos.	A	B	C	Purchase Unint
QR/P8-8P-C(21)	CL0221-0167-3-21	8	27.0	21.6	17.0	50pcs per bag
QR/P8-12P-C(21)	CL0221-0169-9-21	12	31.0	25.6	21.0	
QR/P8-20P-C(21)	CL0221-0171-0-21	20	39.0	33.6	29.0	

Note : When attaching to the panel, make sure that the mated clearance dimensions on the male and females sides are 1.5mm or less.

Female Housing



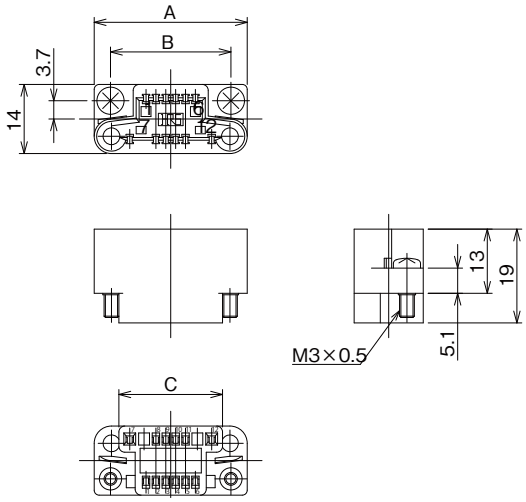

Unit : mm

Part No.	HRS No.	No. of Pos.	A	B	C	Purchase Unint
QR/P8-8S-C(21)	CL0221-0168-6-21	8	27.0	20.4	17.0	50pcs per bag
QR/P8-12S-C(21)	CL0221-0170-8-21	12	31.0	24.4	21.0	
QR/P8-20S-C(21)	CL0221-0172-3-21	20	39.0	32.4	29.0	

Note : When attaching to the panel, make sure that the mated clearance dimensions on the male and females sides are 1.5mm or less.

Aug.1.2025 Copyright 2025 HIROSE ELECTRIC CO., LTD. All Rights Reserved.

Contact

Male Contact for Thick Cable (2 Contact Holes on Both Sides)



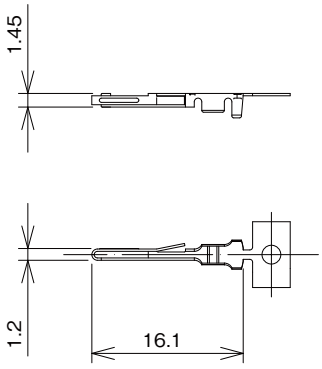

Part No.	HRS No.	Applicable Cable	Type of Packing	Purchase Unit
QR/P8-PC-111	CL0221-0182-7-00	20 to 24 AWG	Loose	100pcs per bag
QR/P8-PC-211	CL0221-0175-1-00		Reel	8,000pcs per reel

Note : The contacts for thick cables can be crimped when using an applicable cable size of 24 AWG, but the contacts for thin cables are recommended.

Female Contact for Thick Cable (2 Contact Holes on Both Sides)



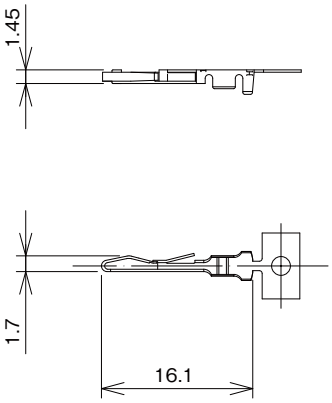

Part No.	HRS No.	Applicable Cable	Type of Packing	Purchase Unit
QR/P8-SC-111(12)	CL0221-0183-0-12	20 to 24 AWG	Loose	100pcs per bag
QR/P8-SC-211(12)	CL0221-0173-6-12		Reel	8,000pcs per reel

Note : The contacts for thick cables can be crimped when using an applicable cable size of 24 AWG, but the contacts for thin cables are recommended.

Aug.1.2025 Copyright 2025 HIROSE ELECTRIC CO., LTD. All Rights Reserved.

Male Contact for Thin Cable



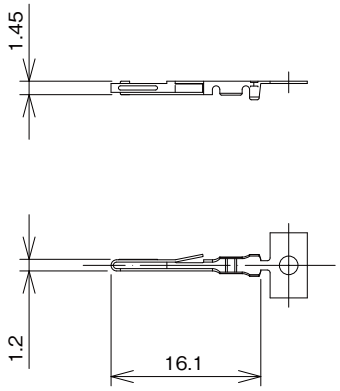

Part No.	HRS No.	Applicable Cable	Type of Packing	Purchase Unit
QR/P8-PC-121	CL0221-0184-2-00	24 to 28 AWG	Loose	100pcs per bag
QR/P8-PC-221	CL0221-0176-4-00		Reel	8,000pcs per reel

Female Contact for Thin Cable



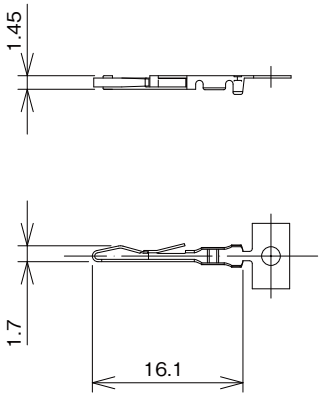

Part No.	HRS No.	Applicable Cable	Type of Packing	Purchase Unit
QR/P8-SC-121(12)	CL0221-0185-5-12	24 to 28 AWG	Loose	100pcs per bag
QR/P8-SC-221(12)	CL0221-0174-9-12		Reel	8,000pcs per reel

Aug.1.2025 Copyright 2025 HIROSE ELECTRIC CO., LTD. All Rights Reserved.

Panel Mounting Dimensions

Male Housing (QR/P8-#P-C)

Attachment from Panel Rear Side

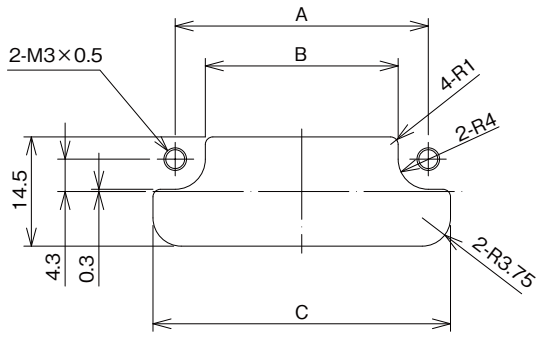

Attachment from Panel Front Side

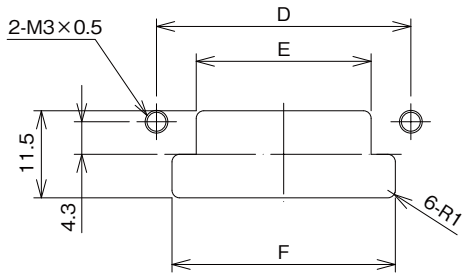

Unit : mm

Type		8pos.	12pos.	20pos.
Rear Mount	A	21.6	25.6	33.6
	B	13.6	17.6	25.6
	C	27.5	31.5	39.5
Front Mount	D	21.6	25.6	33.6
	E	11.1	15.1	23.1
	F	17.5	21.5	29.5

Aug.1.2025 Copyright 2025 HIROSE ELECTRIC CO., LTD. All Rights Reserved.

Female Housing
(QR/P8-#S-C)

Attachment from Panel Rear Side

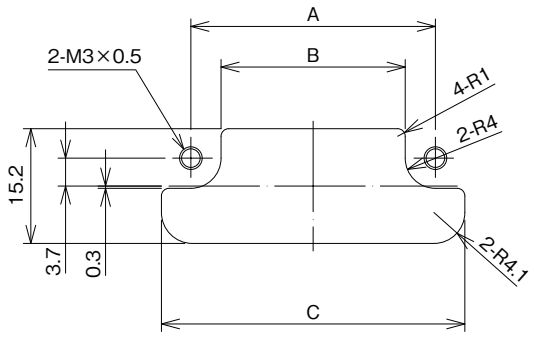

Attachment from Panel Front Side

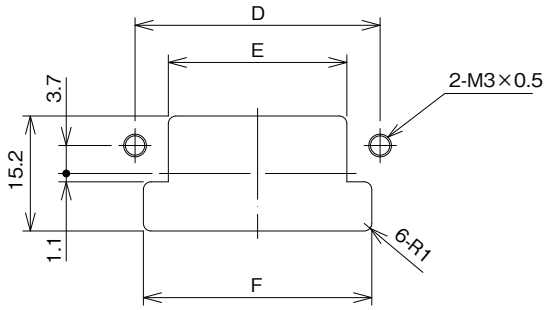

Unit : mm

Type		8pos.	12pos.	20pos.
Rear Mount	A	20.4	24.4	32.4
	B	12.4	16.4	24.4
	C	28.2	32.2	40.2
Front Mount	D	20.4	24.4	32.4
	E	11.6	15.6	23.6
	F	18.2	22.2	30.2

Aug.1.2025 Copyright 2025 HIROSE ELECTRIC CO., LTD. All Rights Reserved.

Contact Arrangement

Male Housing (View from the Connection Side)

■ : Contact hole for thick cables (Can insert contacts for thin cables)
□ : Contact hole for thin cables

QR/P8-8P-C(21)

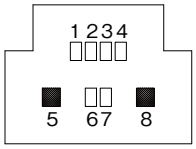

QR/P8-12P-C(21)

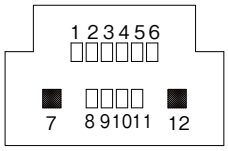

QR/P8-20P-C(21)

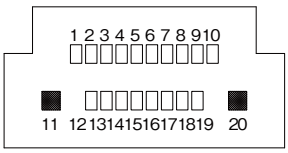

Aug.1.2025 Copyright 2025 HIROSE ELECTRIC CO., LTD. All Rights Reserved.

Tools



Manual Crimp Tool



Automatic Crimp Tool
CM-105C

Type	Part No.	HRS No.	Applicable Contact
Manual Crimp Tool	TC-QR/P8-111	CL0250-0030-4-00	QR/P8-PC-111 QR/P8-SC-111
	TC-QR/P8-121	CL0250-0031-7-00	QR/P8-PC-121 QR/P8-SC-121
Automatic Crimp Tool Applicator	AP105-QR/P8-1	CL0901-2533-3-00	QR/P8-PC-211 QR/P8-SC-211
	AP105-QR/P8-2	CL0901-2534-6-00	QR/P8-PC-221 QR/P8-SC-221
Extraction Tool	TC-QR/P8-21	CL0250-0033-2-00	-

While Taking into Consideration

Specifications mentioned in this catalog are reference values.
When considering to order or use this product, please confirm the Drawing and Product Specifications sheets.
Use an appropriate cable when using the connector in combination with cables.
If considering usage of a non- specified cable, please contact your sales representative.
If assembly process is done by jigs & tools which are not identified by Hirose, assurance will not be given.
If considering usage for below mentioned applications, please contact your sales representative.
In cases where the application will demand a high level of reliability, such as automotive, medical instruments, public infrastructure, aerospace/ defense etc. Hirose must review before assurance of reliability can be given.

Aug.1.2025 Copyright 2025 HIROSE ELECTRIC CO., LTD. All Rights Reserved.