# PLC-RSC- 12DC/ 1IC/ACT - Relay module

1078800

https://www.phoenixcontact.com/us/products/1078800

Please be informed that the data shown in this PDF document is generated from our online catalog. Please find the complete data in the user documentation. Our general terms of use for downloads are valid.



PLC-INTERFACE for high switch-on currents, consisting of PLC-BSC.../1 IC/ACT basic terminal block with push-in connection and plug-in miniature relay, for mounting on DIN rail NS 35/7,5, max. switch-on current up to 130 A, 1 N/O contact, input voltage 12 V DC

## Your advantages

- Direct connection of load return line thanks to actuator version
- Safe isolation between coil and contact side
- Max. inrush current of 130 A
- Functional plug-in bridges

## Commercial data

| | |
|---|---|
| Item number | 1078800 |
| Packing unit | 10 pc |
| Minimum order quantity | 10 pc |
| Sales key | C461 |
| Product key | DK6236 |
| GTIN | 4055626794532 |
| Weight per piece (including packing) | 76.38 g |
| Weight per piece (excluding packing) | 44.1 g |
| Customs tariff number | 85364190 |
| Country of origin | DE |

# Technical data

## Notes

| | |
|---|---|
| Notes on operation | Separating plate PLC-ATP must be installed for voltages larger than 250 V (L1, L2, L3) between identical terminal blocks in adjacent modules. Potential bridging is then carried out with FBST 8-PLC... or FBST 500.... |
| Notes on operation | The PLC-ATP separating plate should be installed for safe isolation between adjacent modules |
| Assembly note | The PLC-ATP separating plate is required at the start and end of every PLC terminal strip. |
| Notes on operation | The system installer must ensure the touch protection of the product (at voltages > 25 V AC/60 V DC). The product is a built-in device without protection against direct contact. |

## Product properties

| | |
|---|---|
| Product type | Relay Module |
| Product family | PLC-INTERFACE |
| Application | high inrush currents |
| Operating mode | 100% operating factor |
| Mechanical service life | 3x $10^7$ cycles |

Insulation characteristics: Standards/regulations

| | |
|---|---|
| Insulation | Safe isolation, reinforced insulation |
| Overvoltage category | III |
| Pollution degree | 3 |

Data management status

| | |
|---|---|
| Date of last data management | 06.07.2025 |

## Electrical properties

| | |
|---|---|
| Maximum power dissipation for nominal condition | 0.4 W |
| Test voltage (Winding/contact) | 4 kV AC (50 Hz, 1 min., winding/contact) |

Standards/regulations

| | |
|---|---|
| Rated insulation voltage | 250 V AC |
| Rated surge voltage | 6 kV |

## Input data

Coil side

| | |
|---|---|
| Nominal input voltage $U_N$ | 12 V DC |
| Input voltage range | 10.32 V DC ... 16.8 V DC (20 °C) |
| Nominal voltage (plugged-in electromechanical relay) | 12 V DC |
| Drive and function | monostable |
| Drive (polarity) | polarized |
| Typical input current at $U_N$ | 33 mA |

| | |
|---|---|
| Typical response time | 8 ms |
| Typical release time | 10 ms |
| Protective circuit | Reverse polarity protection; Polarity protection diode |
| | Freewheeling diode; Freewheeling diode |
| Operating voltage display | Yellow LED |

## Output data

Switching

| | |
|---|---|
| Contact switching type | 1 N/O contact |
| Type of switch contact | Single contact |
| Contact material | AgSnO |
| Maximum switching voltage | 250 V AC/DC (The separating plate PLC-ATP should be installed for voltages larger than 250 V (L1, L2, L3) between identical terminal blocks in adjacent modules. Potential bridging is then carried out with FBST 8-PLC... or ...FBST 500...) |
| Minimum switching voltage | 12 V (100 mA) |
| Limiting continuous current | 6 A |
| | 10 A (the value is permissible if both connections 13, both connections 14 and both connections BB are bridged) |
| Maximum inrush current | 80 A (20 ms) |
| | 130 A (peak, at capacitive load, 230 V AC, 24 µF) |
| Min. switching current | 100 mA (12 V) |
| Interrupting rating (ohmic load) max. | 144 W (at 24 V DC) |
| | 58 W (at 48 V DC) |
| | 48 W (at 60 V DC) |
| | 50 W (at 110 V DC) |
| | 80 W (at 220 V DC) |
| | 85 W (for 250 V DC) |
| | 1500 VA (for 250 V AC) |
| Interrupting rating (ohmic load) max. bridged | 240 W (for 24 V DC. The value is permissible if both connections 13, both connections 14 and both connections BB are bridged.) |
| | 2500 VA (for 250 V AC. The value is permissible if both connections 13, both connections 14 and both connections BB are bridged.) |
| Switching capacity min. | 1200 mW |
| Switching capacity | 2 A (at 24 V, DC13) |
| | 0.2 A (at 110 V, DC13) |
| | 0.2 A (at 250 V, DC13) |
| | 6 A (at 24 V, AC15) |
| | 6 A (at 120 V, AC15) |
| | 6 A (at 250 V, AC15) |

## Connection data

| | |
|---|---|
| Connection method | Screw connection |
| Stripping length | 8 mm |
| Screw thread | M3 |

| | |
|---|---|
| Conductor cross-section rigid | 0.14 mm² ... 2.5 mm² |
| Conductor cross-section flexible | 0.14 mm² ... 2.5 mm² |
| | 0.2 mm² ... 2.5 mm² (Single ferrule) |
| | 2x 0.5 mm² ... 1.5 mm² (TWIN ferrule) |
| Conductor cross-section AWG | 26 ... 14 |
| Tightening torque | 0.6 Nm ... 0.8 Nm |

## Dimensions

| | |
|---|---|
| Width | 14 mm |
| Height | 80 mm |
| Depth | 94 mm |

## Material specifications

| | |
|---|---|
| Color | gray (RAL 7042) |
| Flammability rating according to UL 94 (Housing) | V0 (Housing) |

## Environmental and real-life conditions

### Ambient conditions

| | |
|---|---|
| Degree of protection (Relay) | RT II (Relay) |
| Degree of protection (Relay base) | IP20 (Relay base) |
| Degree of protection (Installation location) | ≥ IP54 (Installation location) |
| Ambient temperature (operation) | -40 °C ... 60 °C |
| Ambient temperature (storage/transport) | -40 °C ... 85 °C |
| Altitude | ≤ 2000 m |

## Approvals

### CE

| | |
|---|---|
| Certificate | CE-compliant |

### UKCA

| | |
|---|---|
| Certificate | UKCA-compliant |

### Shipbuilding approval

| | |
|---|---|
| Certificate | TAE0000196 |

### Corrosive gas test

| | |
|---|---|
| Identification | ISA-S71.04. G3 Harsh Group |
| | EN 60068-2-60 |

### Shipbuilding data

| | |
|---|---|
| Temperature | D |
| Humidity | A |
| Vibration | B/C |
| EMC | B |
| Enclosure | Required protection according to the Rules shall be provided upon installation on board |

## EMC data

| | |
|---|---|
| Electromagnetic compatibility | Conformance with EMC directive |
| Low Voltage Directive | Conformance with Low Voltage Directive |

## Standards and regulations

Standards/regulations

| | |
|---|---|
| Standards/regulations | IEC 60947-5-1 |

## Mounting

| | |
|---|---|
| Mounting type | DIN rail mounting |
| Assembly note | in rows with zero spacing |
| Mounting position | any |

## Drawings

Diagram

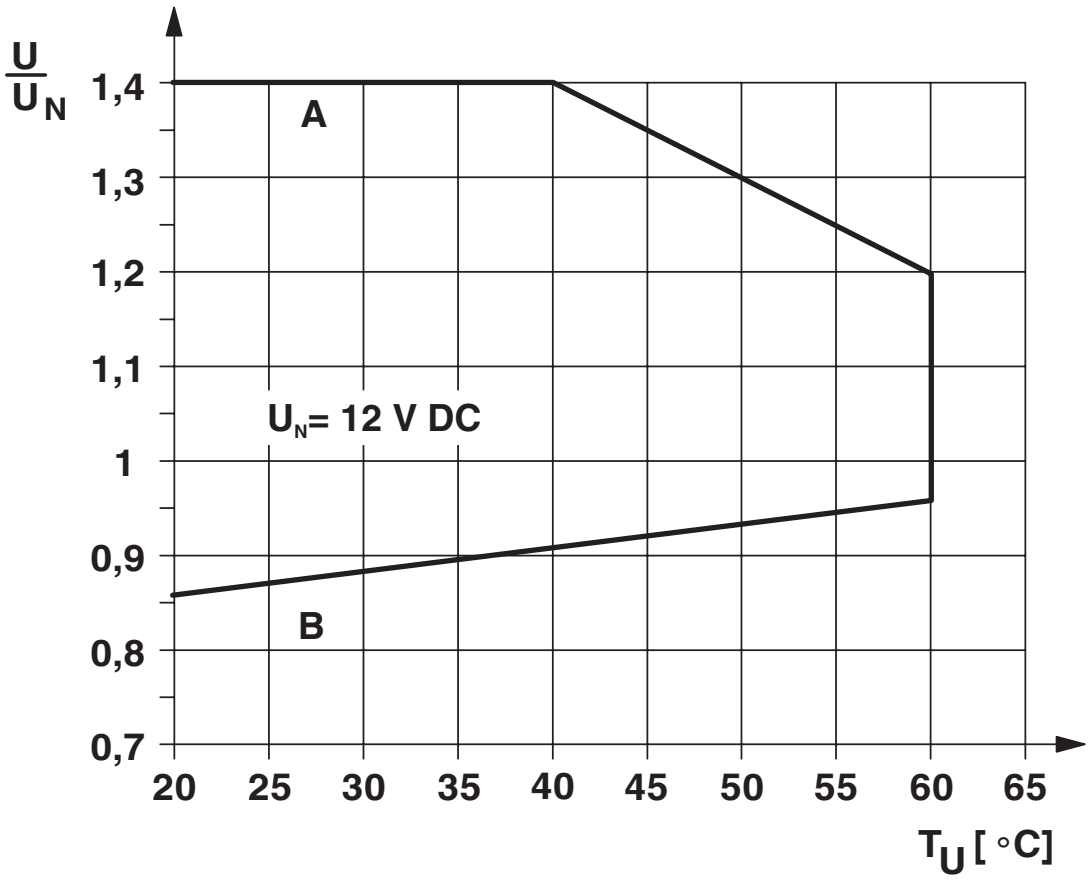


### Curve A

Maximum permissible continuous voltage $U_{max}$ with limiting continuous current on the contact side (see relevant technical data)

### Curve B

Minimum permissible operate voltage $U_{op}$ after pre-excitation (see relevant technical data)

Diagram

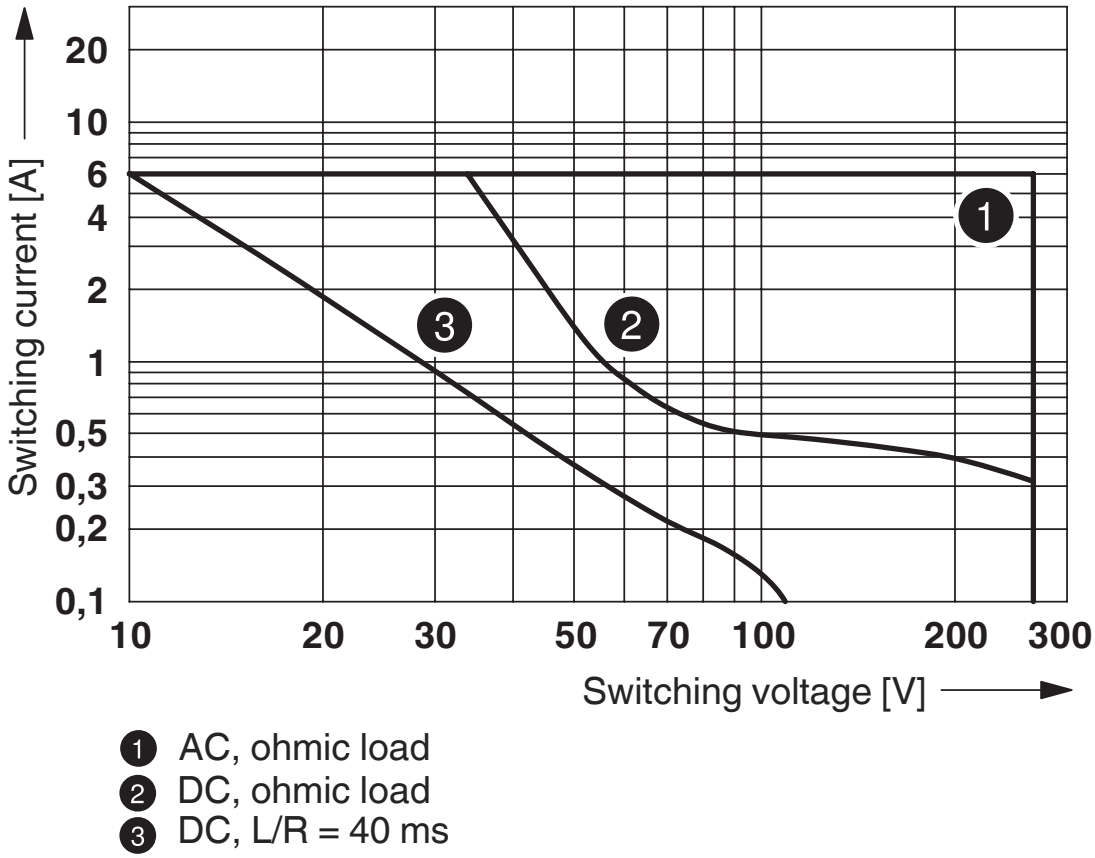


1 AC, ohmic load
2 DC, ohmic load
3 DC, L/R = 40 ms

Interrupting rating

Diagram

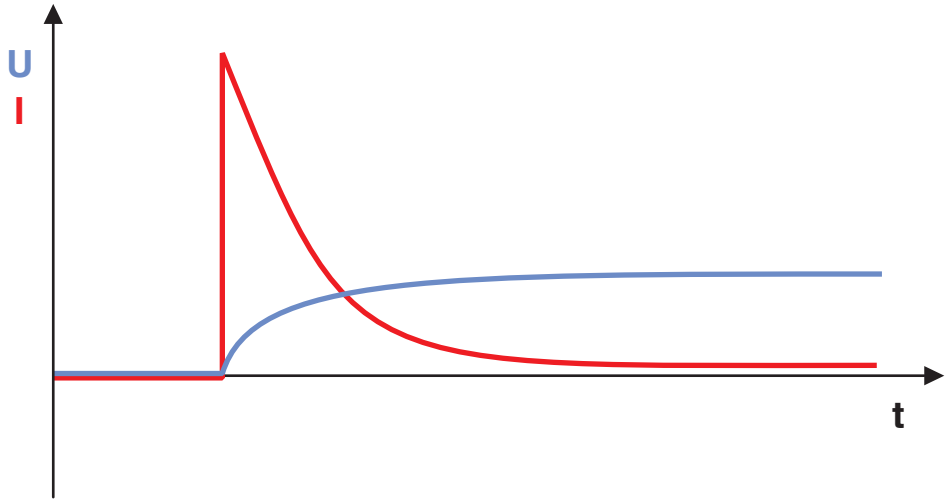


Basic behavior of capacitive loads:
- Very high inrush current
- Voltage increases with an e-function

Diagram

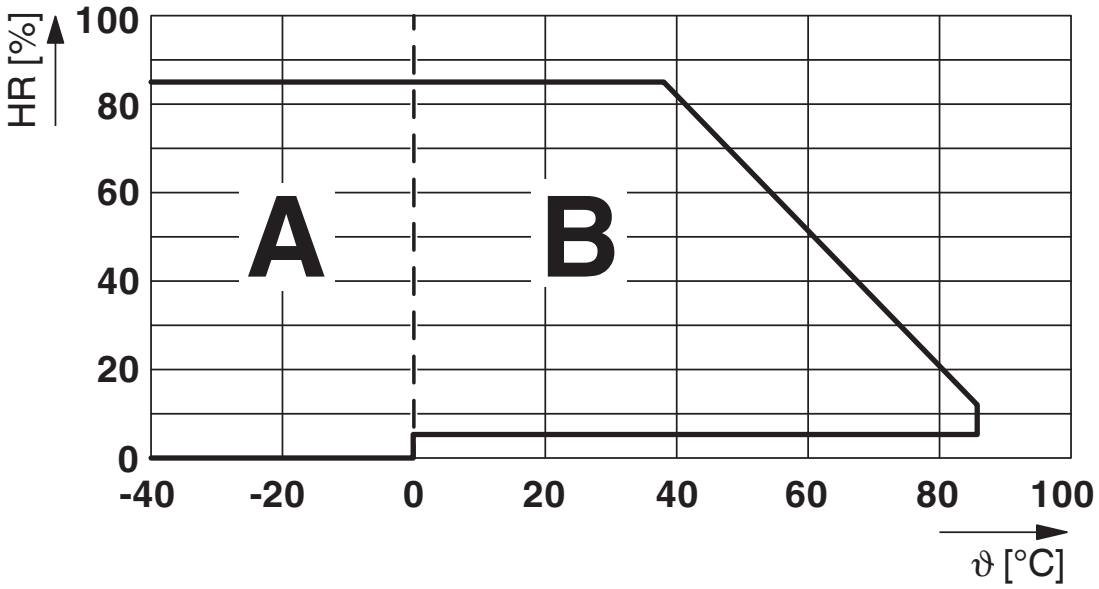


Permissible humidity for operation and storage.
The maximum permissible ambient temperature as specified in the data sheet must be observed.

Area A: Ice buildup at ambient temperatures ≤ 0°C must be prevented
Area B: Condensation at ambient temperatures > 0°C must be prevented

On 30 full days that are naturally distributed across an entire year, a humidity level of 95% is permissible at an ambient temperature ≤ 25°C.

Circuit diagram

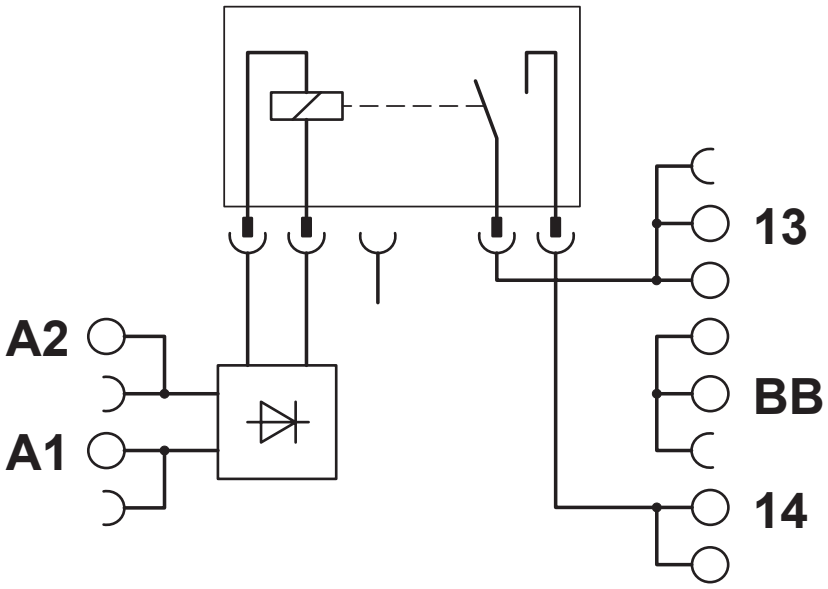

## Classifications

### ECLASS

| | |
|---|---|
| ECLASS-13.0 | 27371601 |

### ETIM

| | |
|---|---|
| ETIM 9.0 | EC001437 |

### UNSPSC

| | |
|---|---|
| UNSPSC 21.0 | 39122300 |

## Environmental product compliance

EU RoHS

| | |
|---|---|
| Fulfills EU RoHS substance requirements | Yes |
| Exemption | 7(a), 7(c)-I |

China RoHS

| | |
|---|---|
| Environment friendly use period (EFUP) | EFUP-50 |
| | An article-related China RoHS declaration table can be found in the download area for the respective article under "Manufacturer declaration". For all articles with EFUP-E, no China RoHS declaration table issued and required. |

EU REACH SVHC

| | |
|---|---|
| REACH candidate substance (CAS No.) | Hexahydromethylphthalic anhydride(CAS: n/a) |
| | Lead(CAS: 7439-92-1) |
| SCIP | 7f18f8c1-412e-4857-8d7a-516c95862d3f |

Phoenix Contact 2025 © - all rights reserved
https://www.phoenixcontact.com

Phoenix Contact USA
586 Fulling Mill Road
Middletown, PA 17057, United States
(+717) 944-1300
info@phoenixcon.com