HC-B10-SG-CBK - Flat gasket

1411484

https://www.phoenixcontact.com/us/products/1411484

Please be informed that the data shown in this PDF document is generated from our online catalog. Please find the complete data in the user documentation. Our general terms of use for downloads are valid.



Replacement flat gasket, for HEAVYCON panel mounting base, HC-STA....AL, type B10, conductive

Commercial data

Item number	1411484
Packing unit	10 pc
Minimum order quantity	10 pc
Sales key	BF66
Product key	BF7APZ
Catalog page	Page 662 (C-2-2017)
GTIN	4046356932844
Weight per piece (including packing)	5.58 g
Weight per piece (excluding packing)	5.05 g
Customs tariff number	40169300
Country of origin	CN

Technical data

Product properties

Product type	Seal
Application	for panel-mount base

Dimensions

Dimensional drawing	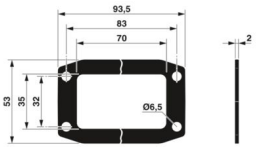
Width	53 mm
Height	2 mm
Length	93.5 mm
Drill hole distance, horizontal	83 mm
Drill hole distance, vertical	32 mm
Hole diameter	6.5 mm

Material specifications

Material	NBR, conductive
Seal material	NBR

Environmental and real-life conditions

Ambient conditions

Ambient temperature (operation)	-40 °C ... 125 °C

Drawings

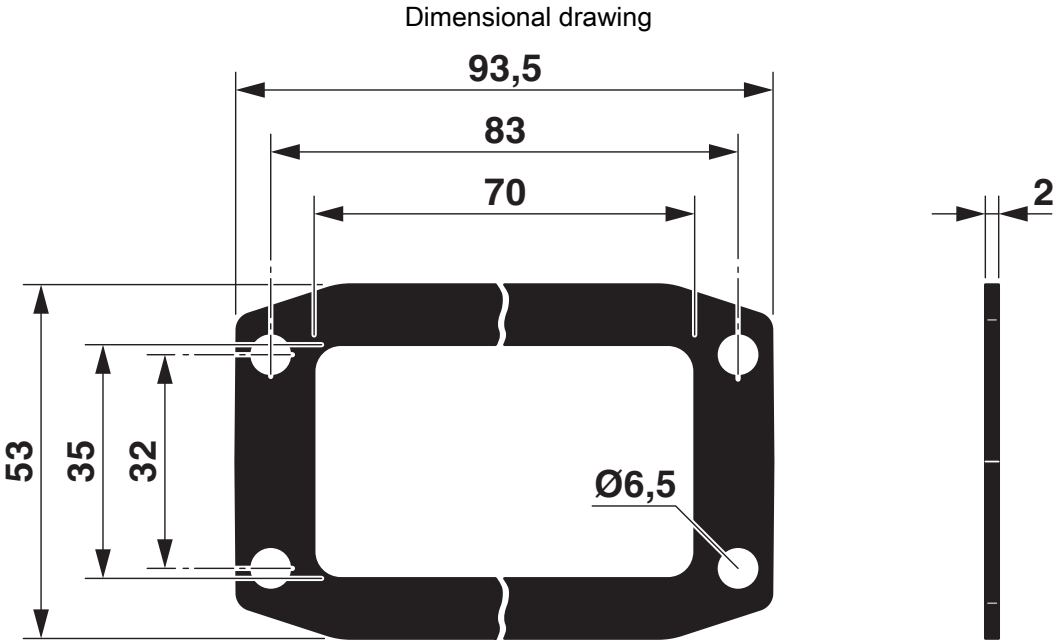

Dimensional drawing

Approvals

To download certificates, visit the product detail page: https://www.phoenixcontact.com/us/products/1411484

EAC
Approval ID: RU C-DE.AI30.B.01102

Classifications

ECLASS

ECLASS-11.0	23071590
ECLASS-12.0	23071590
ECLASS-13.0	23071590

ETIM

ETIM 9.0	EC002498

UNSPSC

UNSPSC 21.0	31401600

Environmental product compliance

EU RoHS

Fulfills EU RoHS substance requirements	Yes, No exemptions

China RoHS

Environment friendly use period (EFUP)	EFUP-E
	No hazardous substances above the limits

EU REACH SVHC

REACH candidate substance (CAS No.)	No substance above 0.1 wt%

Phoenix Contact 2024 © - all rights reserved
https://www.phoenixcontact.com

Phoenix Contact USA
586 Fulling Mill Road
Middletown, PA 17057, United States
(+717) 944-1300
info@phoenixcon.com