# EEM-MA371 - Measuring device

2908307

https://www.phoenixcontact.com/us/products/2908307

Please be informed that the data shown in this PDF document is generated from our online catalog. Please find the complete data in the user documentation. Our general terms of use for downloads are valid.



Multi-functional energy measuring device with direct Rogowski connection and integrated Modbus/TCP interface for measuring electrical parameters in low-voltage installations up to 690 V. (phoenixcontact.com/empro-help)

## Commercial data

| | |
|---|---|
| Item number | 2908307 |
| Packing unit | 1 pc |
| Minimum order quantity | 1 pc |
| Sales key | C446 |
| Product key | CMMC21 |
| GTIN | 4055626471983 |
| Weight per piece (including packing) | 305.45 g |
| Weight per piece (excluding packing) | 253 g |
| Customs tariff number | 90303100 |
| Country of origin | DE |

# Technical data

## Product properties

| | |
|---|---|
| Product type | Energy measuring device |
| Product family | EMpro |
| Number | 1 |

Display

| | |
|---|---|
| Display type | LCD display, backlit, 2-color, multi-line |

## Electrical properties

| | |
|---|---|
| Maximum power dissipation for nominal condition | 10 VA |
| Mains type | 3-phase (3 or 4-conductor), 2-phase (2-conductor), and single-phase (1-conductor) |

Electrical isolation

| | |
|---|---|
| Test voltage | 4 kV AC (50 Hz, 60 s) |
| Pollution degree | 2 |
| Insulation | Reinforced insulation |

Electrical isolation Housing against all potentials IEC 61010-1

| | |
|---|---|
| Standards/regulations | IEC 61010-1 |
| Overvoltage category | III (300 V AC) |
| | II (600 V AC) |
| Insulation | Reinforced insulation |

Electrical isolation Supply against all other potentials IEC 61010-1

| | |
|---|---|
| Standards/regulations | IEC 61010-1 |
| Overvoltage category | III (300 V AC) |
| | II (600 V AC) |
| Insulation | Reinforced insulation |

Electrical isolation Voltage measurement input against all other potentials IEC 61010-2-030

| | |
|---|---|
| Standards/regulations | IEC 61010-2-030 |
| Measuring category | III (300 V AC) |
| | II (600 V AC) |
| Insulation | Reinforced insulation |

Electrical isolation Digital I/Os

| | |
|---|---|
| Insulation | Functional insulation |

Electrical isolation Communication interface

| | |
|---|---|
| Insulation | Functional insulation |

Supply

| | |
|---|---|
| Supply voltage range | 100 V AC ... 230 V AC (±20 %) |
| | 150 V DC ... 250 V DC (±20 %) |

| | |
|---|---|
| Power consumption | ≤ 4 W |
| Nominal frequency | 50 Hz ... 60 Hz (AC sine) |

## Input data

General

| | |
|---|---|
| Measuring principle | True r.m.s. value measurement |
| Measured value | AC sine (50 Hz/60 Hz) |
| Acquisition of harmonics | up to 63rd harmonic |
| Description of the input | Digital input in accordance with IEC/EN 61131-2 (type 3) |
| Number | 1 |
| Voltage input signal | 24 V DC |
| | 0 V DC ... 30 V DC |
| Current input signal | 2 mA ... 15 mA |
| Protection | 250 mA (fast-blow) |
| Protective circuit | Protection against incorrect DC connection (max. 30 V) |

Measurement: Voltage

| | |
|---|---|
| Input name | Voltage measuring input V1, V2, V3 |
| Input voltage range direct | 35 V AC ... 690 V AC (Phase/Phase) |
| | 20 V AC ... 400 V AC (Phase/neutral conductor) |
| Input voltage range via external transformers | 60 V AC ... 2000000 V AC (primary) |
| | 60 V AC ... 400 V AC (secondary) |
| Surge voltage capacity | 760 V AC (Phase/Phase) |
| Precision | 0.2 % |
| Power consumption | < 0.5 VA |

Measurement: Current

| | |
|---|---|
| Input name | Current measurement RC1, RC2, RC3 |
| Input current | ≤ 400 A (Measurement level 1) |
| | ≤ 4000 A (Measurement level 2) |
| | Transmission factor: 100 mV/1000 A when using a Phoenix Contact coil |
| Input measuring range voltage | 500 µV ... 400 mV |
| Response threshold from measuring range nominal value | 5 A |
| Operate threshold | 500 µV (5 A) |
| Precision | 0.5 % |

Measurement: Power

| | |
|---|---|
| Precision | 1 % |
| Real energy (IEC 62053-21) | Class 1 |
| Reactive power (IEC 62053-23) | Class 2 |

## Output data

| | |
|---|---|
| Output description | Digital output in accordance with IEC/EN 61131-2 (type 3) |
| Number | 1 |

| | |
|---|---|
| Current output signal | ≤ 100 mA |
| Voltage output signal | 24 V DC |
| Protection | 250 mA (fast-blow) |
| Protective circuit | Protection against incorrect DC connection (max. 30 V) |

## Connection data

Current / voltage / supply

| | |
|---|---|
| Connection method | Screw connection |
| Stripping length | 8 mm |
| Screw thread | M3 |
| Conductor cross-section rigid | 0.2 mm² ... 6 mm² |
| Conductor cross-section flexible | 0.2 mm² ... 4 mm² |
| Conductor cross-section AWG | 24 ... 10 |
| Tightening torque | 0.5 Nm ... 0.6 Nm |

Digital I/O / communication

| | |
|---|---|
| Connection method | Screw connection |
| Stripping length | 7 mm |
| Screw thread | M3 |
| Conductor cross-section rigid | 0.14 mm² ... 2.5 mm² |
| Conductor cross-section flexible | 0.14 mm² ... 1.5 mm² |
| Conductor cross-section AWG | 26 ... 14 |
| Tightening torque | 0.5 Nm ... 0.6 Nm |

## Interfaces

Data: Network interface

| | |
|---|---|
| Communication protocol | Modbus/TCP |
| | REST |
| Connection method | RJ45 |

## Dimensions

| | |
|---|---|
| Width | 90 mm |
| Height | 90 mm |
| Depth | 71.9 mm |

## Material specifications

| | |
|---|---|
| Color | gray (RAL 7042) |

## Environmental and real-life conditions

Ambient conditions

| | |
|---|---|
| Degree of protection (Housing) | IP20 (Housing) |
| Degree of protection (Display) | IP40 (Display) |
| Ambient temperature (operation) | -25 °C ... 70 °C |
| Ambient temperature (storage/transport) | -30 °C ... 80 °C |

| | |
|---|---|
| Altitude | ≤ 2000 m |
| Max. permissible relative humidity (operation) | ≤ 95 % (non-condensing) |

## Approvals

CE

| | |
|---|---|
| Certificate | CE-compliant |

UKCA

| | |
|---|---|
| Certificate | UKCA-compliant |

UL, USA/Canada

| | |
|---|---|
| Identification | UL/C-UL Listed UL 61010-1 |

UL data

| | |
|---|---|
| Operating mode | Indoor use |

## Standards and regulations

| | |
|---|---|
| Standards/regulations | IEC 61010-1 |
| | IEC 61326-1 |
| | IEC 61557-12 |

## Mounting

| | |
|---|---|
| Mounting type | DIN rail mounting |
| Mounting position | Horizontal DIN rail |

## Drawings

Connection diagram

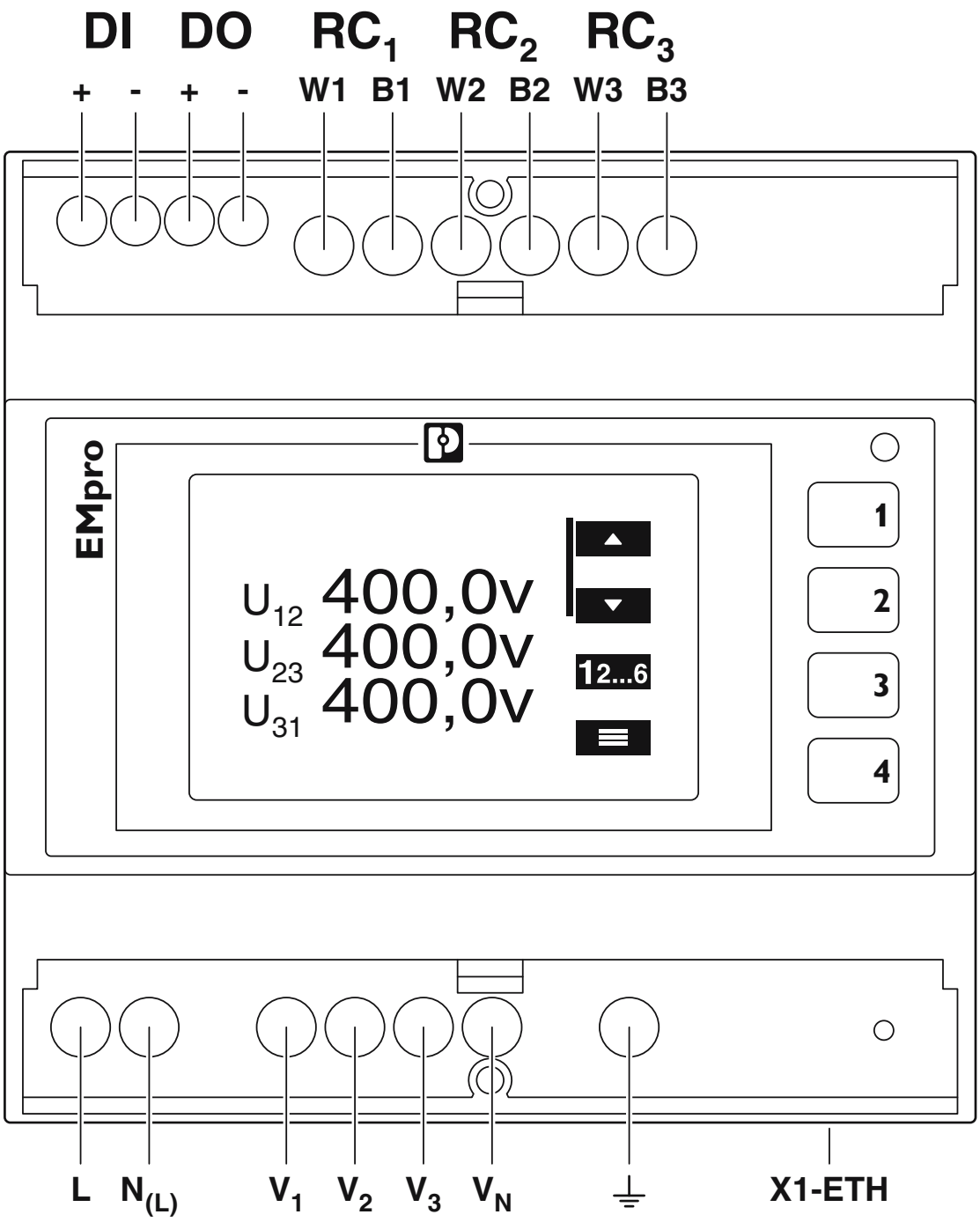


Connection assignment

Connection diagram

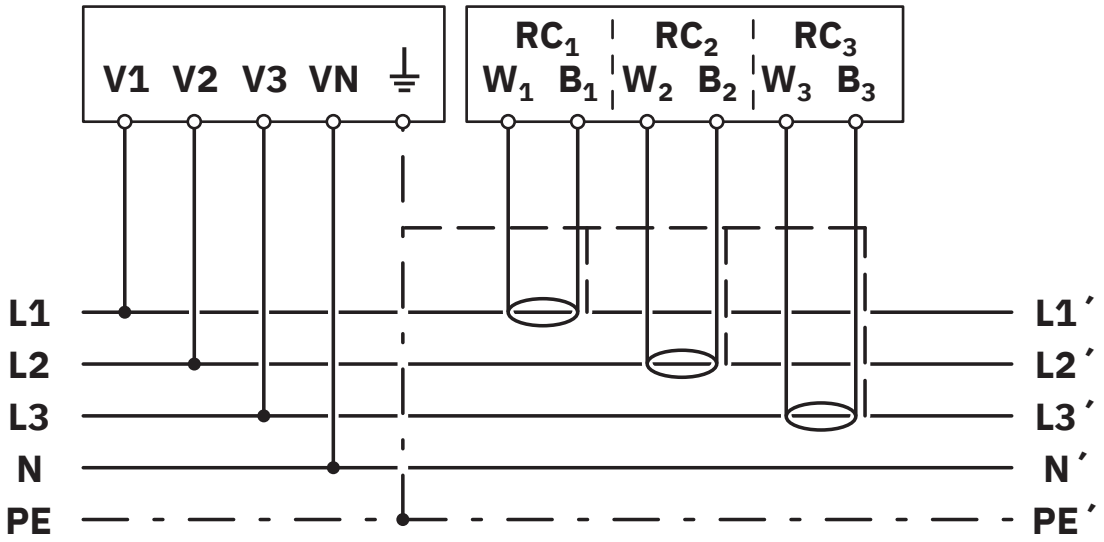


Network type: 3PH-4W-3RC

Connection diagram

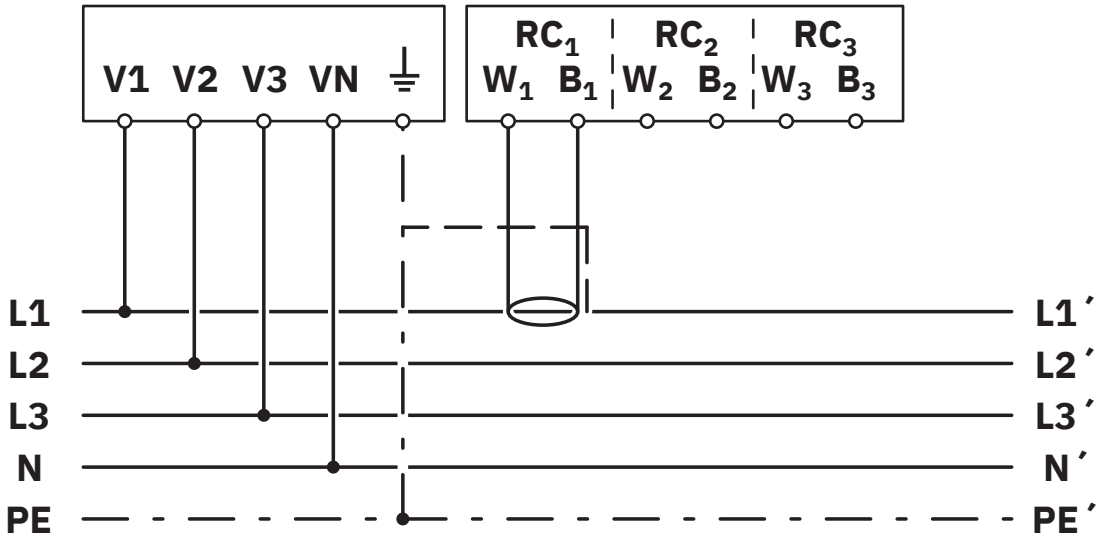


Network type: 3PH-4W-1RC

Connection diagram

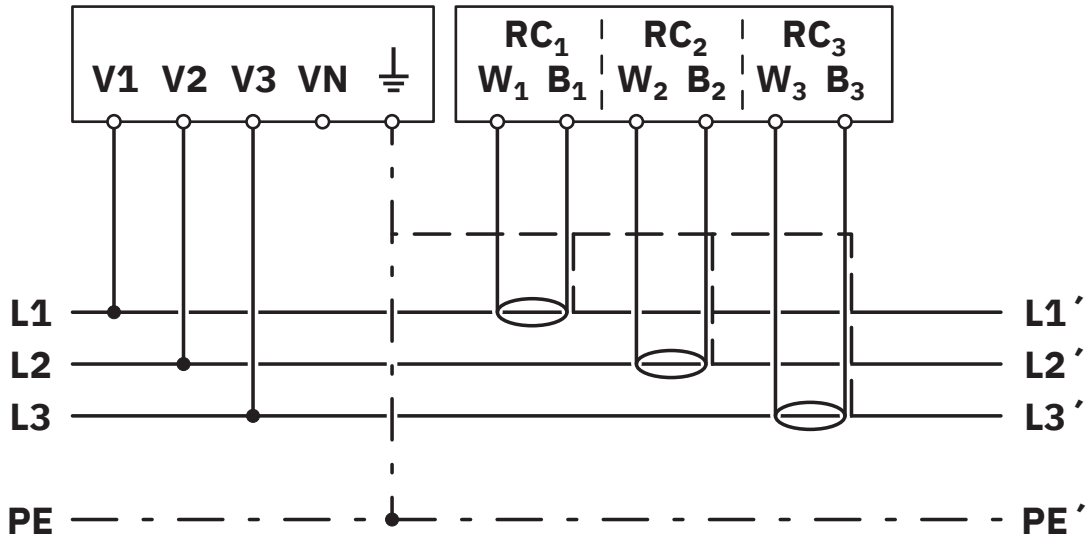


Network type: 3PH-3W-3RC

Connection diagram

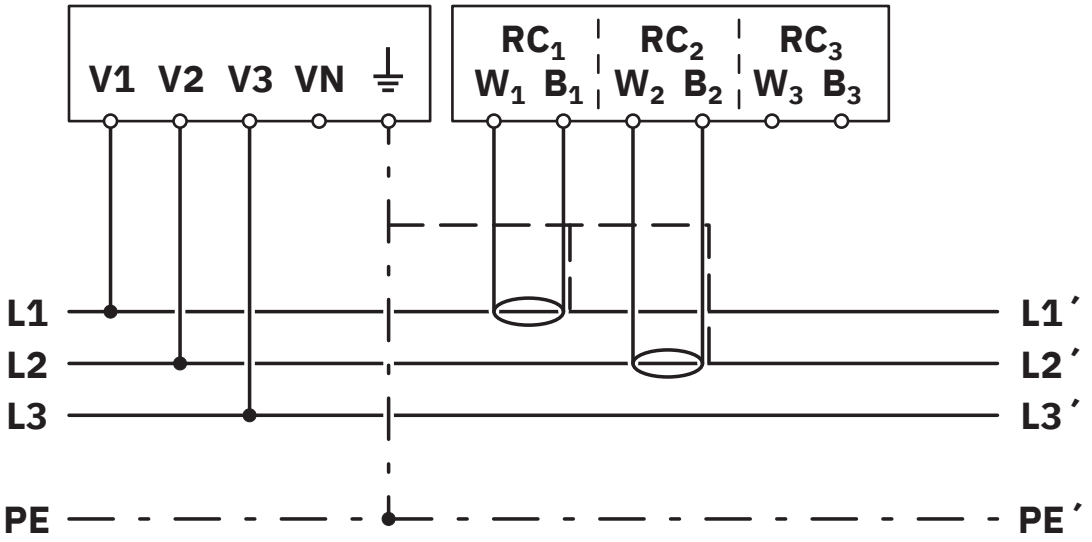


Network type: 3PH-3W-2RC

Connection diagram

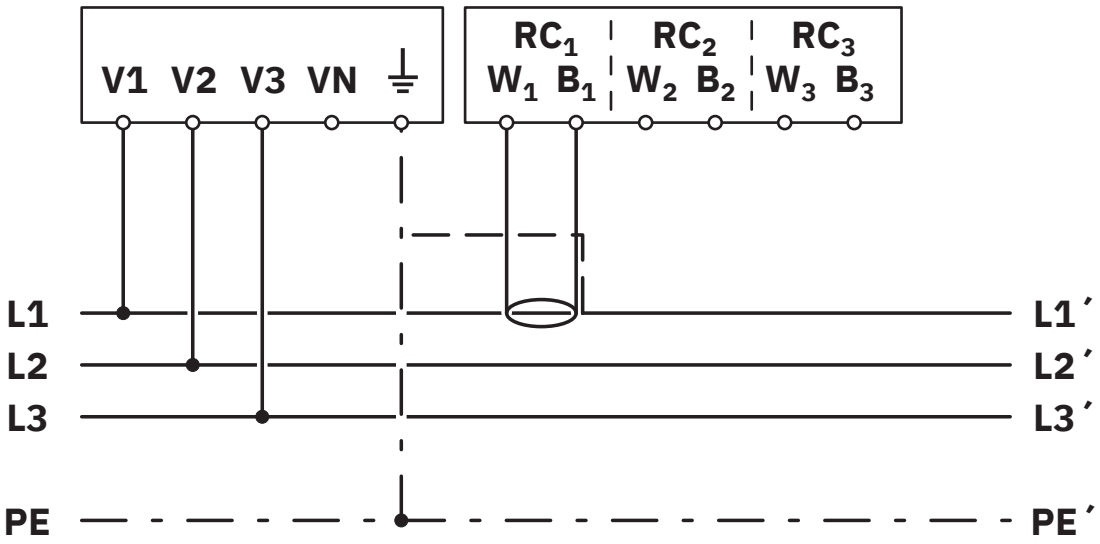


Network type: 3PH-3W-1RC

Connection diagram

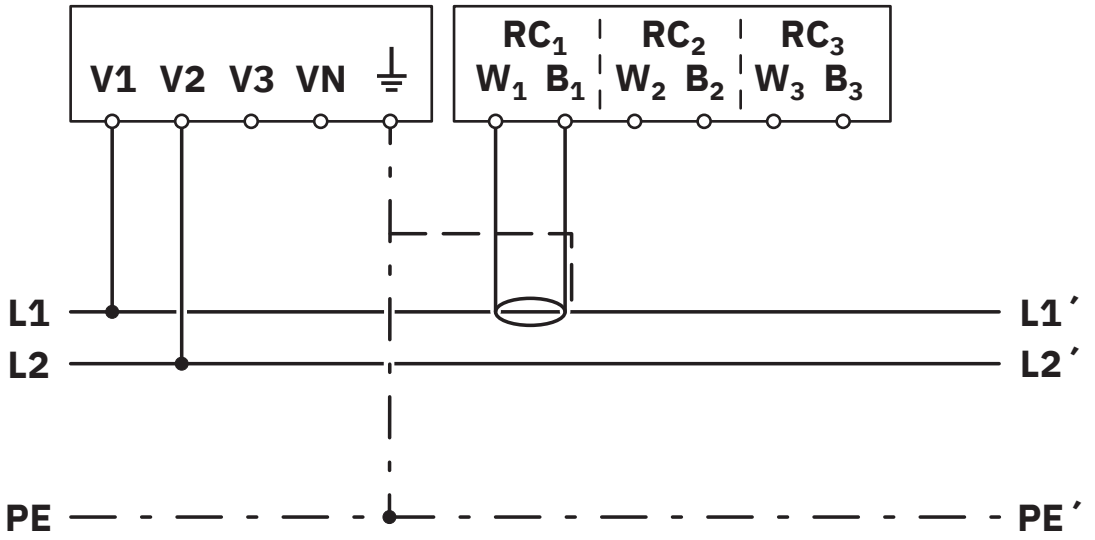


Network type: 2PH-2W-1RC

Connection diagram

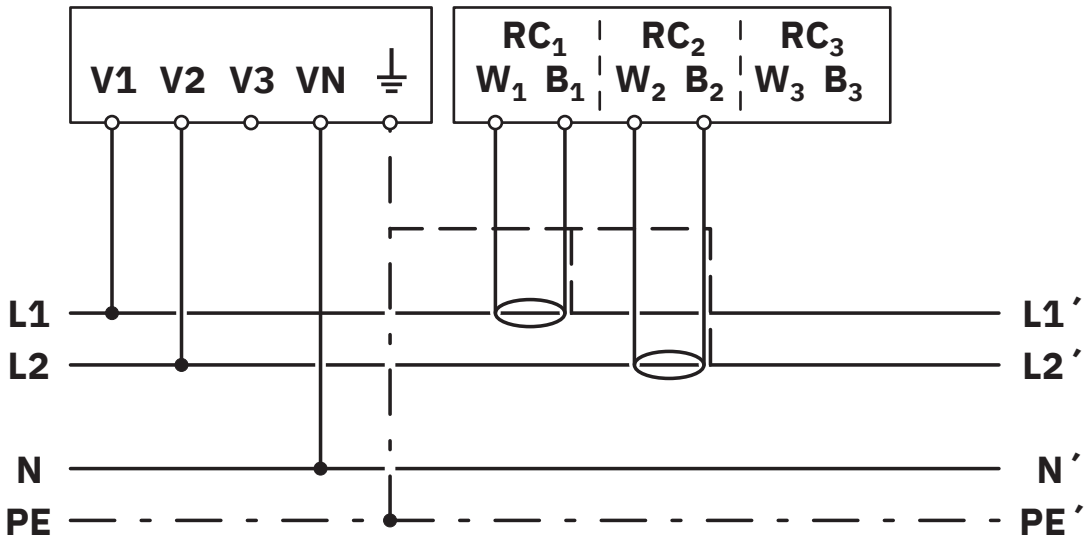


Network type: 2PH-3W-2RC

Connection diagram

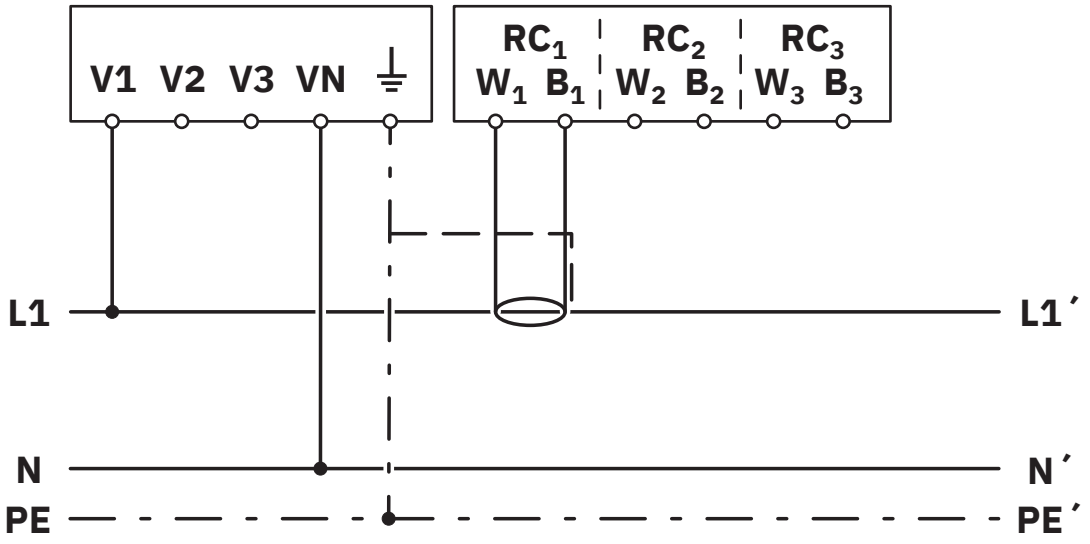


Network type: 1PH-2W-1RC

Schematic diagram

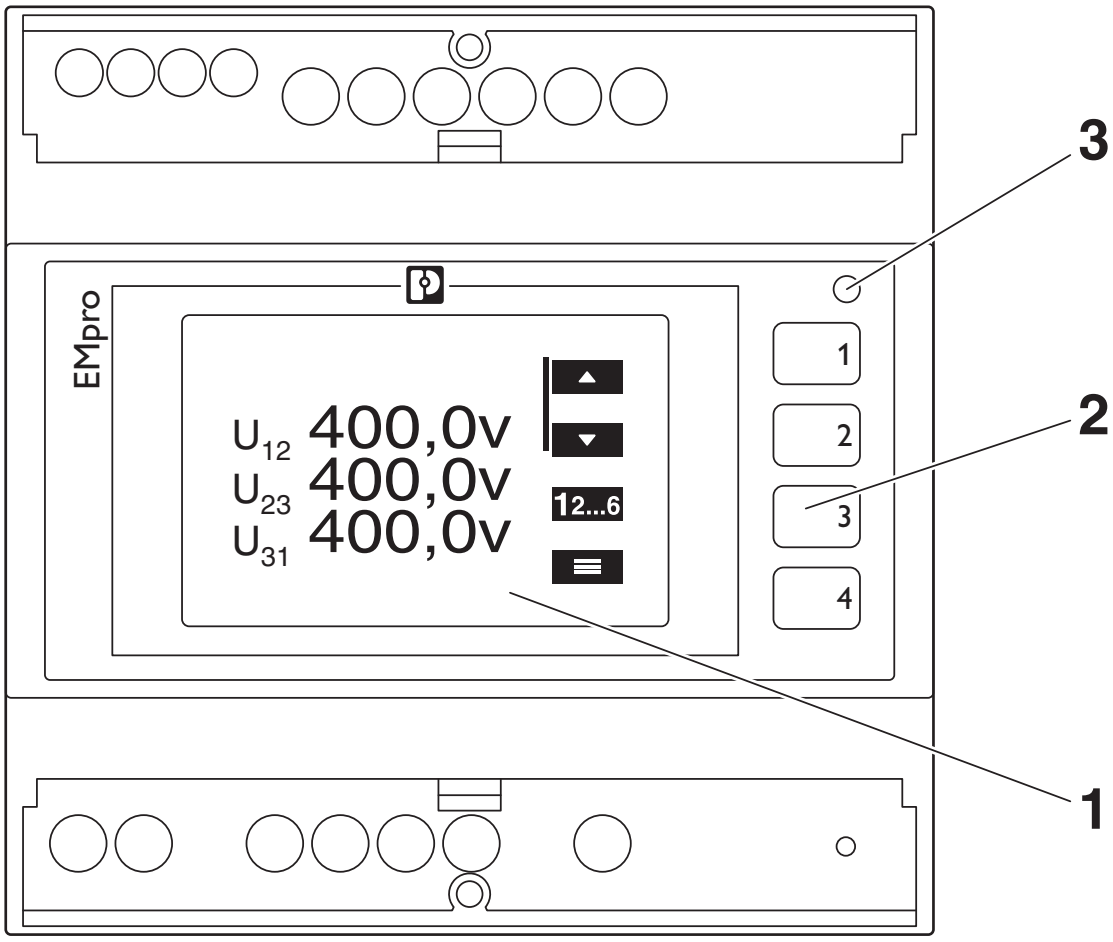


Operating and indication elements
1 LCD, backlit
2 Operating buttons for displaying measured values and for changing the configuration
3 Pulse LED

Schematic diagram

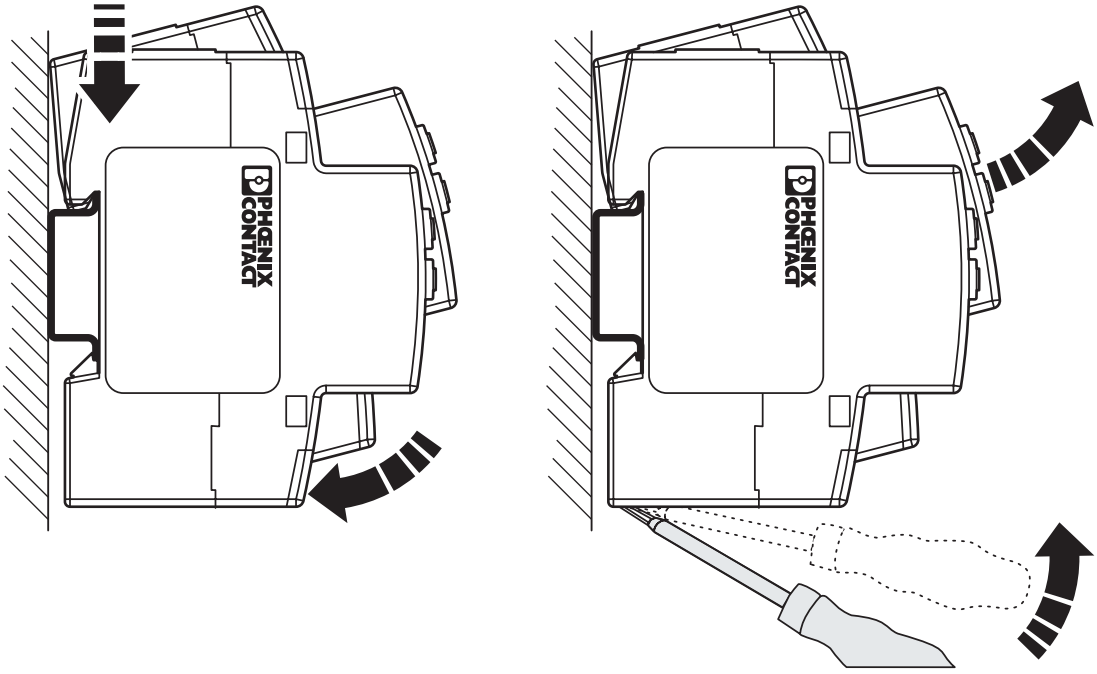

Mounting

## Approvals

To download certificates, visit the product detail page: https://www.phoenixcontact.com/us/products/2908307

**EAC**
Approval ID: RU*DE*08.B.00734/19

**cULus Listed**
Approval ID: E357804

## Classifications

### ECLASS

| | |
|---|---|
| ECLASS-13.0 | 27142330 |
| ECLASS-15.0 | 27142330 |

### ETIM

| | |
|---|---|
| ETIM 9.0 | EC002301 |

### UNSPSC

| | |
|---|---|
| UNSPSC 21.0 | 41113600 |

## Environmental product compliance

EU RoHS

| | |
|---|---|
| Fulfills EU RoHS substance requirements | Yes |
| Exemption | 7(a), 7(c)-I |

China RoHS

| | |
|---|---|
| Environment friendly use period (EFUP) | EFUP-50 |
| | An article-related China RoHS declaration table can be found in the download area for the respective article under "Manufacturer declaration". For all articles with EFUP-E, no China RoHS declaration table issued and required. |

EU REACH SVHC

| | |
|---|---|
| REACH candidate substance (CAS No.) | Lead(CAS: 7439-92-1) |
| | Perfluorobutane sulfonic acid (PFBS) and its salts(CAS: n/a) |
| SCIP | 36e0c995-3f4c-4f23-9ba5-6d56e462797e |


Phoenix Contact 2025 © - all rights reserved
https://www.phoenixcontact.com



Phoenix Contact USA
586 Fulling Mill Road
Middletown, PA 17057, United States
(+717) 944-1300
info@phoenixcon.com