NTC Thermistors, Radial Leaded with Low $B_{25/85}$ Values



LINKS TO ADDITIONAL RESOURCES

Related Documents

QUICK REFERENCE DATA		
PARAMETER	VALUE (per case)	UNIT
Resistance value at 25 °C	5K, 10K	Ω
Tolerance on R_{25}-value	± 1	%
$B_{25/85}$-value	3324, 3435	K
Tolerance on $B_{25/85}$-value	± 1	%
Operating temperature range at zero dissipation (1)	-55 to +125	°C
Response time (63.2 %) 25 °C to 85 °C in oil	1.2	s
Dissipation factor δ in still air	7	mW/K
Maximum power dissipation at max. 55 °C	250	mW
Weight	≈ 0.22	g

Note

(1) Zero dissipation is considered as measurement power less than 1 % of max power

FEATURES

- Alternate $B_{25/85}$ to the NTCLE100.. series
- Linearization possible over a wider range of temperature because lower sensitivity than standard NTCLE101…SB0 (lower $B_{25/85}$ values)
- Delivered in bulk (delivery on tape and reel possible)
- Material categorization: for definitions of compliance please see www.vishay.com/doc?99912

Pb e3 RoHS COMPLIANT

APPLICATIONS

- Temperature measurement, sensing, control, and compensation

DESCRIPTION

These thermistors have a NTC chip soldered between two solid copper wires. They are gray lacquered and marked with a color dot.

MOUNTING

Important mounting and handling instructions: see www.vishay.com/doc?29222

By soldering in any position. Not intended for potted applications.

PACKAGING

The thermistors are packed in cardboard boxes, each box contains 500 units.

DESIGN-IN SUPPORT

For complete curve computation, please visit: www.vishay.com/thermistors/ntc-curve-list/.

ELECTRICAL DATA AND ORDERING INFORMATION

R_{25} (Ω)	R_{25}-TOL. (± %)	$B_{25/85}$ (K)	$B_{25/85}$-TOL. (± %)	DESCRIPTION	SAP MATERIAL AND ORDERING NUMBER	COLOR CODE
5000	1	3324	1	NTC copper 0.6 color coded 5K 1 % bulk e3	NTCLE101E3C90172	Red
10 000	1	3435	1	NTC copper 0.6 color coded 10K 1 % bulk e3	NTCLE101E3C90173	White

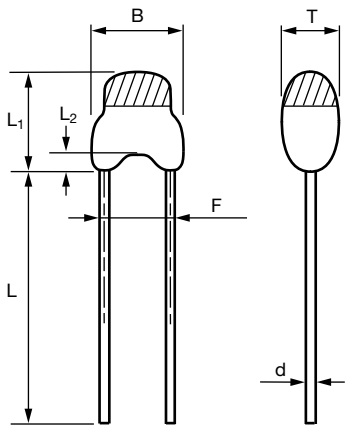

DIMENSIONS in millimeters	
PARAMETER	VALUE
B max.	3.5
T max.	2.8
L_1 max.	8
L_2	2 ± 1
L min.	17
F	2.54
d	0.6 ± 0.06

For technical questions, contact: nlr@vishay.com

THIS DOCUMENT IS SUBJECT TO CHANGE WITHOUT NOTICE. THE PRODUCTS DESCRIBED HEREIN AND THIS DOCUMENT ARE SUBJECT TO SPECIFIC DISCLAIMERS, SET FORTH AT www.vishay.com/doc?91000

Disclaimer

ALL PRODUCT, PRODUCT SPECIFICATIONS AND DATA ARE SUBJECT TO CHANGE WITHOUT NOTICE TO IMPROVE RELIABILITY, FUNCTION OR DESIGN OR OTHERWISE.

Vishay Intertechnology, Inc., its affiliates, agents, and employees, and all persons acting on its or their behalf (collectively, “Vishay”), disclaim any and all liability for any errors, inaccuracies or incompleteness contained in any datasheet or in any other disclosure relating to any product.

Vishay makes no warranty, representation or guarantee regarding the suitability of the products for any particular purpose or the continuing production of any product. To the maximum extent permitted by applicable law, Vishay disclaims (i) any and all liability arising out of the application or use of any product, (ii) any and all liability, including without limitation special, consequential or incidental damages, and (iii) any and all implied warranties, including warranties of fitness for particular purpose, non-infringement and merchantability.

Statements regarding the suitability of products for certain types of applications are based on Vishay's knowledge of typical requirements that are often placed on Vishay products in generic applications. Such statements are not binding statements about the suitability of products for a particular application. It is the customer's responsibility to validate that a particular product with the properties described in the product specification is suitable for use in a particular application. Parameters provided in datasheets and / or specifications may vary in different applications and performance may vary over time. All operating parameters, including typical parameters, must be validated for each customer application by the customer's technical experts. Product specifications do not expand or otherwise modify Vishay's terms and conditions of purchase, including but not limited to the warranty expressed therein.

Hyperlinks included in this datasheet may direct users to third-party websites. These links are provided as a convenience and for informational purposes only. Inclusion of these hyperlinks does not constitute an endorsement or an approval by Vishay of any of the products, services or opinions of the corporation, organization or individual associated with the third-party website. Vishay disclaims any and all liability and bears no responsibility for the accuracy, legality or content of the third-party website or for that of subsequent links.

Vishay products are not designed for use in life-saving or life-sustaining applications or any application in which the failure of the Vishay product could result in personal injury or death unless specifically qualified in writing by Vishay. Customers using or selling Vishay products not expressly indicated for use in such applications do so at their own risk. Please contact authorized Vishay personnel to obtain written terms and conditions regarding products designed for such applications.

No license, express or implied, by estoppel or otherwise, to any intellectual property rights is granted by this document or by any conduct of Vishay. Product names and markings noted herein may be trademarks of their respective owners.

© 2025 VISHAY INTERTECHNOLOGY, INC. ALL RIGHTS RESERVED

THIS DOCUMENT IS SUBJECT TO CHANGE WITHOUT NOTICE. THE PRODUCTS DESCRIBED HEREIN AND THIS DOCUMENT ARE SUBJECT TO SPECIFIC DISCLAIMERS, SET FORTH AT www.vishay.com/doc?91000