IXYS

ADVANCE TECHNICAL INFORMATION

DSEE30-12A

HiPerFRED™ Epitaxial Diode

I_{FAV} = 30 A
V_{RRM} = 1200 V①
t_{rr} = 30 ns

V_{RRM}① V	V_{RRM} V	Type
1200	600	DSEE30-12A

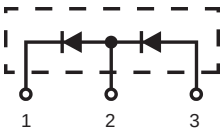

TO-247 AD

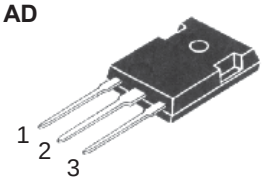

Symbol	Conditions	Maximum Ratings	
I_{FRMS}		60	A
I_{FAVM} ①	T_C = 90°C; rectangular, d = 0.5	30	A
I_{FSM}	T_{VJ} = 45°C; t_p = 10 ms (50 Hz), sine	200	A
E_{AS}	T_{VJ} = 25°C; non-repetitive I_{AS} = 1.3 A; L = 180 µH	0.2	mJ
I_{AR}	V_A = 1.5· V_R typ.; f = 10 kHz; repetitive	0.1	A
T_{VJ}		-55...+175	°C
T_{VJM}		175	°C
T_{stg}		-55...+150	°C
T_L	1.6 mm (0.063 in) from case for 10 s	260	°C
P_{tot}	T_C = 25°C	165	W
M_d	Mounting Torque	0.9/6	Nm/lb.in.
Weight	typical	2	g

Symbol	Conditions	Characteristic Values typ.	max.	
I_R ①②	T_{VJ} = 25°C V_R = V_{RRM}		200	µA
	T_{VJ} = 150°C V_R = V_{RRM}		2	mA
V_F ③	I_F = 30 A; T_{VJ} = 125°C		1.75	V
	T_{VJ} = 25°C		2.5	V
R_{thJC}			0.9	K/W
R_{thCH}		0.25		K/W
t_{rr}	I_F = 1 A; -di/dt = 200 A/µs; V_R = 30 V	30		ns
I_{RM}	V_R = 100 V; I_F = 50 A; -di_F/dt = 100 A/µs T_{VJ} = 100°C	4		A

Notes: Data given for T_{VJ} = 25°C and per diode unless otherwise specified
① Diodes connected in series
② Pulse test: pulse Width = 5 ms, Duty Cycle < 2.0 %
③ Pulse test: pulse Width = 300 µs, Duty Cycle < 2.0 %

Features

- Planar passivated chips
- Very short recovery time
- Extremely low switching losses
- Low I_{RM}-values
- Soft recovery behaviour
- Epoxy meets UL 94V-0

Applications

- Antiparallel diode for high frequency switching devices
- Antisaturation diode
- Snubber diode
- Free wheeling diode in converters and motor control circuits
- Rectifiers in switch mode power supplies (SMPS)
- Inductive heating
- Uninterruptible power supplies (UPS)
- Ultrasonic cleaners and welders

Advantages

- Avalanche voltage rated for reliable operation
- Soft reverse recovery for low EMI/RFI
- Low I_{RM} reduces:
  - Power dissipation within the diode
  - Turn-on loss in the commutating switch

Notes

- Please see DSEP 30-06A Data Sheet for characteristic curves.

IXYS reserves the right to change limits, test conditions and dimensions.

© 2002 IXYS All rights reserved

TO-247 AD Outline

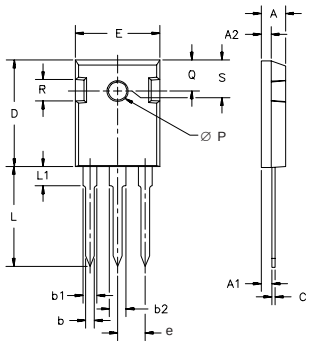

Dim.	Millimeter		Inches	
	Min.	Max.	Min.	Max.
A	4.7	5.3	.185	.209
A_1	2.2	2.54	.087	.102
A_2	2.2	2.6	.059	.098
b	1.0	1.4	.040	.055
b_1	1.65	2.13	.065	.084
b_2	2.87	3.12	.113	.123
C	.4	.8	.016	.031
D	20.80	21.46	.819	.845
E	15.75	16.26	.610	.640
e	5.20	5.72	0.205	0.225
L	19.81	20.32	.780	.800
L1		4.50		.177
∅P	3.55	3.65	.140	.144
Q	5.89	6.40	0.232	0.252
R	4.32	5.49	.170	.216
S	6.15	BSC	242	BSC

IXYS reserves the right to change limits, test conditions, and dimensions.

IXYS MOSFETS and IGBTs are covered by one or more of the following U.S. patents: 4,835,592 4,881,106 5,017,508 5,049,961 5,187,117 5,486,715 6,306,728B1 4,850,072 4,931,844 5,034,796 5,063,307 5,237,481 5,381,025