1-480281-0 ✔ ACTIVE

FASTIN-FASTON | FASTIN-FASTON 250

TE Internal #: 1-480281-0

Crimp Terminal Housings, Receptacle, Receptacle, 6 Position, Straight, UL 94V-2, Black, Nylon, Contact Mating Retention, FASTIN-FASTON 250

View on TE.com >

Terminals & Splices > Terminal Housings, Insulation Sleeves & Blocks > Crimp Terminal Housings

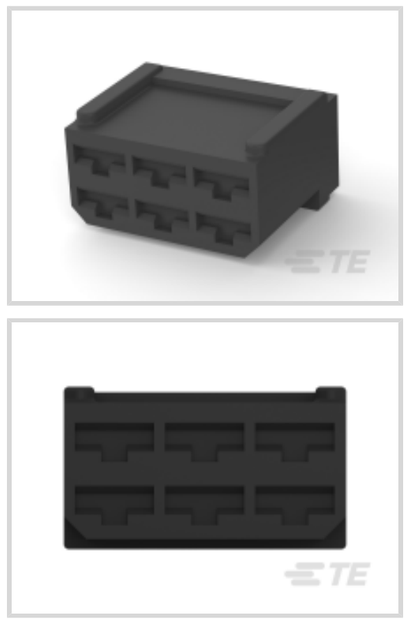

Terminal Type: **Receptacle**

Connector & Housing Type: **Receptacle**

Number of Positions: **6**

Terminal Orientation: **Straight**

UL Flammability Rating: **UL 94V-2**

Features

Product Type Features

Sealable	No
Connector & Contact Terminates To	Wire & Cable
Connector & Housing Type	Receptacle

Configuration Features

Number of Positions	6

Body Features

Primary Product Color	Black

Contact Features

Terminal Type	Receptacle
Terminal Orientation	Straight
Contact Mating Retention	With

Mechanical Attachment

Mating Retention Type	Latch

Mating Alignment	With
Connector Mounting Type	Cable Mount (Free-Hanging)

Housing Features

Housing Material	Nylon
Centerline (Pitch)	9.15 mm[.36 in]

Dimensions

Product Length	38.1 mm[1.5 in]

Usage Conditions

Operating Temperature Range	-40 - 105 °C[-40 - 221 °F]

Industry Standards

UL Flammability Rating	UL 94V-2

Packaging Features

Packaging Quantity	1
Packaging Method	Carton

Product Compliance

For compliance documentation, visit the product page on TE.com>

EU RoHS Directive 2011/65/EU	Compliant
EU ELV Directive 2000/53/EC	Compliant
China RoHS 2 Directive MIIT Order No 32, 2016	No Restricted Materials Above Threshold
EU REACH Regulation (EC) No. 1907/2006	Current ECHA Candidate List: JAN 2024 (240) Candidate List Declared Against: JAN 2024 (240) Does not contain REACH SVHC
Halogen Content	Low Halogen - Br, Cl, F, I < 900 ppm per homogenous material. Also BFR/CFR/PVC Free
Solder Process Capability	Not applicable for solder process capability

Product Compliance Disclaimer

This information is provided based on reasonable inquiry of our suppliers and represents our current actual knowledge based on the information they provided. This information is subject to change. The part numbers that TE has identified as EU RoHS compliant have a maximum concentration of 0.1% by weight in homogenous materials for lead, hexavalent chromium, mercury, PBB, PBDE, DBP, BBP, DEHP, DIBP, and 0.01% for cadmium, or qualify for an exemption to these limits as defined in the Annexes of Directive 2011/65/EU (RoHS2). Finished electrical and electronic equipment products will be CE marked as required by Directive 2011/65/EU. Components may not be CE marked. Additionally, the part numbers that TE has identified as EU ELV compliant have a maximum concentration of 0.1% by weight in homogenous materials for lead, hexavalent chromium, and mercury, and 0.01% for cadmium, or qualify for an exemption to these limits

as defined in the Annexes of Directive 2000/53/EC (ELV). Regarding the REACH Regulation, the information TE provides on SVHC in articles for this part number is based on the latest European Chemicals Agency (ECHA) 'Guidance on requirements for substances in articles' posted at this URL: https://echa.europa.eu/guidance-documents/guidance-on-reach

Compatible Parts

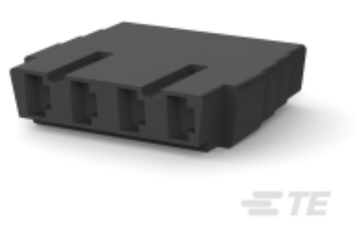

TE Part # 926728-1
FF 110 REC HSG 4P NYLON BLACK

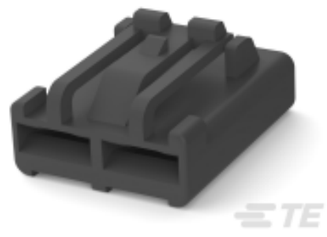

TE Part # 346027-1
FASTIN FASTON HOUSING RECEPTACLE



TE Part # 170258-2
FF 250 REC 14-12AWG TPBR REREELING



TE Part # 170258-1
FF 250 REC 14-12AWG BR REREELING

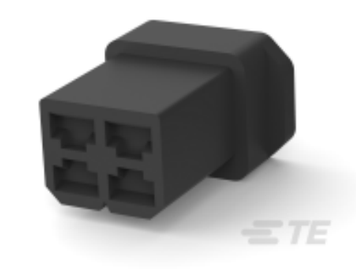

TE Part # 626056-4
FASTIN-ON .110 HOUSING REC PRETO/BLACK

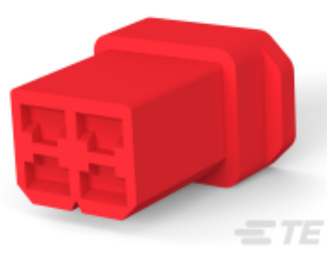

TE Part # 626056-5
FASTIN-ON .110 HOUSING RECEPTACLE RED



TE Part # 1-480252-0
FF 187 REC HSG 3P NYLON NAT



TE Part # 480100-1
FF 312 REC HSG 3P NYLON BLACK



TE Part # 521743-1
FF 250 HOUSING RECEPTACLE NYLON 6/6

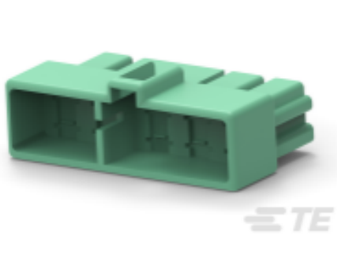

TE Part # 172137-4
FF 250 REC HSG 10P NYLON NAT



TE Part # 175979-2
FF 187 PLUG HSG 8P NYLON BLACK



TE Part # 521381-1
FF 187 REC HSG 6P NYLON BLACK



TE Part # 880107-2
HOUSING 8P .110 FASTON

Also in the Series | FASTIN-FASTON 250



Crimp Terminal Housings(211)



Insertion & Extraction Tools(2)



PCB Terminals(2)

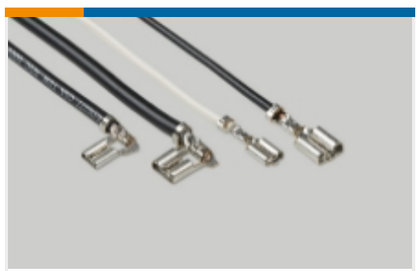

Quick Disconnects(254)

Customers Also Bought



TE Part # 1011-236-0405
BKSHL, 4P, BLK, PLG, RA, NW6/7.5/8.5 /10

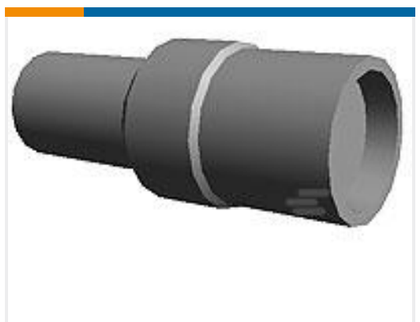

TE Part # 170887-3
IS SHUR PLG 5 DIA NAT

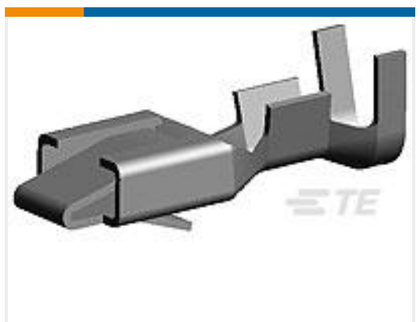

TE Part # 640417-2
BLADE REC 250 18-14AWG TPBR

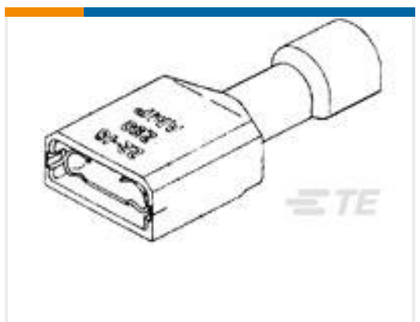

TE Part # 3-520150-2
ULTRA-FAST 187 ASY REC 16-14 AWG TPBR



TE Part # 42460-2
FF 250 TAB 18-14AWG TPBR



TE Part # 61397-1
RING TERMINAL CRIMP 18-14 AWG TPBR

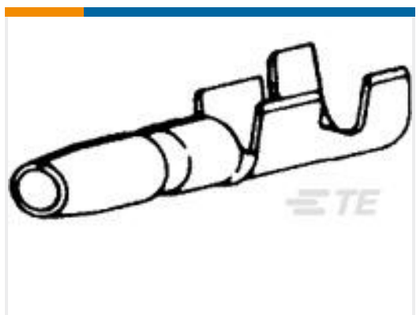

TE Part # 60766-1
SHUR PLUG 156 18-14 AWG BR



TE Part # 170889-2
SLEEVE DIA3 SHUR PLUG NAT



TE Part # 2005564-2
PCU 196P COVER HSG TYPE D



TE Part # 9-1904105-7
V23074A2001A403-SZ-CBOX

Documents

Product Drawings

FF 250 REC HSG 6P NYLON BLACK

English

CAD Files

3D PDF

3D

Customer View Model

ENG_CVM_CVM_1-480281-0_CF.2d_dxf.zip

English

Customer View Model

ENG_CVM_CVM_1-480281-0_CF.3d_igs.zip

English

Customer View Model

ENG_CVM_CVM_1-480281-0_CF.3d_stp.zip

English

By downloading the CAD file I accept and agree to the Terms and Conditionsof use.

Datasheets & Catalog Pages

FASTIN_FASTON_Product_Line

English

White Paper: Nylon Discoloration

English

Product Specifications

Application Specification

English

Agency Approvals

UL Report

English