SIEMENS

Data sheet 3VA5130-5EC31-1AA0



circuit breaker 3VA5 UL frame 125 breaking capacity class M 35kA @ 480 V 3-pole, line protection TM230, FTAM, In=30A overload protection Ir=30A fixed short-circuit protection Ii=5...10 x In UL 489 SB (naval), 50° C without connection

Model	
product brand name	SENTRON
product designation	Molded-case circuit breaker
product designation / according to UL file	MEAM
design of the product	System protection
design of the load switch / according to UL 489 / Heating, Air Conditioning, and Refrigeration circuit breaker (HACR Type)	Yes
design of the load switch / according to UL 489 / High-Intensity-Discharge circuit breaker (HID Type)	Yes
design of the load switch / according to UL 489 / Switching Duty circuit breaker (SWD Type)	No
design of the overcurrent release	TM230
protection function of the overcurrent release	LI
number of poles	3
General technical data	
operating voltage / at AC / rated value	690 V
power loss [W] / maximum	9.6 W
power loss [W] / for rated value of the current / at AC / in hot operating state / per pole	3.2 W
mechanical service life (operating cycles) / typical	20 000
electrical endurance (operating cycles) / at AC-1 / at 380/415 V	8 000
electrical endurance (operating cycles) / at AC-1 / at 690 V	4 000
electrical endurance (operating cycles) / at 480 V	8 000
electrical endurance (operating cycles) / at 600 V	4 000
product feature / for neutral conductors / upgradable/retrofittable / short-circuit and overload proof	No
ground-fault monitoring version	without
product function	
● communication function	No
● other measurement function	No
Net Weight	0.88 kg
Current	
marking / according to UL 489 / 100%-rated breaker	No
operational current	
● at 40 °C	30 A
● at 45 °C	29 A
● at 50 °C	29 A
● at 55 °C	28 A
● at 60 °C	28 A
● at 65 °C	28 A
● at 70 °C	27 A

Subject to change without notice
© Copyright Siemens

Switching capacity according to IEC 60947	
switching capacity class of the circuit breaker	M
design of short-circuit protection	For switching power values in DC networks, see the 3VA molded case circuit breaker device manual; link to be found under Service & Support in the last chapter
Switching capacity according to UL 489	
current breaking capacity	
● at 240 V	85 kA
● at 480 V	35 kA
● at 600 Y/347 V	18 kA
Adjustable parameters	
adjustable response value setting current (Ir) / of the L-trip / with I2t characteristic	
● minimum	30 A
● maximum	30 A
adjustable response value delay time (tr) / for L-tripping / with I2t characteristic	
● minimum	1 s
● maximum	1 s
adjustable response value setting current (Ii) / for I-tripping	
● minimum	150 A
● maximum	300 A
adjustable absolute value setting current (InN) / for N-tripping	
● minimum	0 A
● maximum	0 A
adjustable current response value current / of the current-dependent overload release	30 ... 30 A
product function / grounding protection	No
Mechanical Design	
product component	
● undervoltage release	No
● voltage trigger	No
● trip indicator	No
height [in]	5.51 in
height	140 mm
width [in]	3 in
width	76.2 mm
depth [in]	3.01 in
depth	76.5 mm
Connections	
arrangement of electrical connectors / for main current circuit	Without connection
type of electrical connection / for main current circuit	Without
Auxiliary circuit	
number of CO contacts / for auxiliary contacts	0
Accessories	
product extension / optional / motor drive	Yes
Environmental conditions	
protection class IP / on the front	IP40
ambient temperature	
● during operation / minimum	-25 °C
● during operation / maximum	70 °C
● during storage / minimum	-40 °C
● during storage / maximum	80 °C
Certificates	
certificate of suitability / as approval for NAVAL (no combat vessels) / supplement SB	Yes

General Product Approval



Confirmation







Miscellaneous

Subject to change without notice
© Copyright Siemens

General Product Approval	EMC	Declaration of Conformity	Test Certificates	Marine / Shipping
EAC	RCM	UKCA	CE EG-Konf.	Type Test Certificates/Test Report	ABS

Marine / Shipping	other		
RMRS	Confirmation	Miscellaneous	Miscellaneous

Further information

Siemens has decided to exit the Russian market (see here).
https://press.siemens.com/global/en/pressrelease/siemens-wind-down-russian-business

Siemens is working on the renewal of the current EAC certificates.
Please contact your local Siemens office on the status of validity of the EAC certification if you intend to import or offer to supply these products to an EAC relevant market (other than the sanctioned EAEU member states Russia or Belarus).

Information on the packaging
https://support.industry.siemens.com/cs/ww/en/view/109813875

Information- and Downloadcenter (Catalogs, Brochures,…)
http://www.siemens.com/lowvoltage/catalogs

Industry Mall (Online ordering system)
https://mall.industry.siemens.com/mall/en/en/Catalog/product?mlfb=3VA5130-5EC31-1AA0

Service&Support (Manuals, Certificates, Characteristics, FAQs,...)
https://support.industry.siemens.com/cs/ww/en/ps/3VA5130-5EC31-1AA0

Image database (product images, 2D dimension drawings, 3D models, device circuit diagrams, ...)
http://www.automation.siemens.com/bilddb/cax_en.aspx?mlfb=3VA5130-5EC31-1AA0

CAx-Online-Generator
http://www.siemens.com/cax

Tender specifications
http://www.siemens.com/specifications

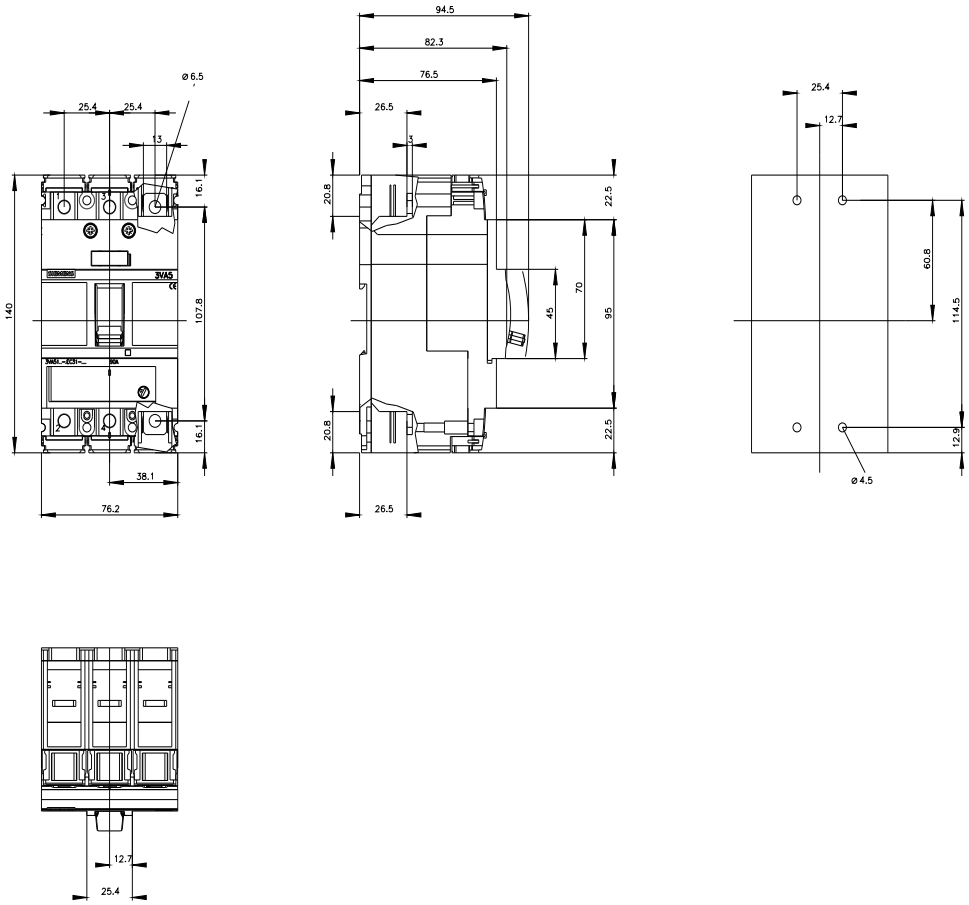

Subject to change without notice
© Copyright Siemens

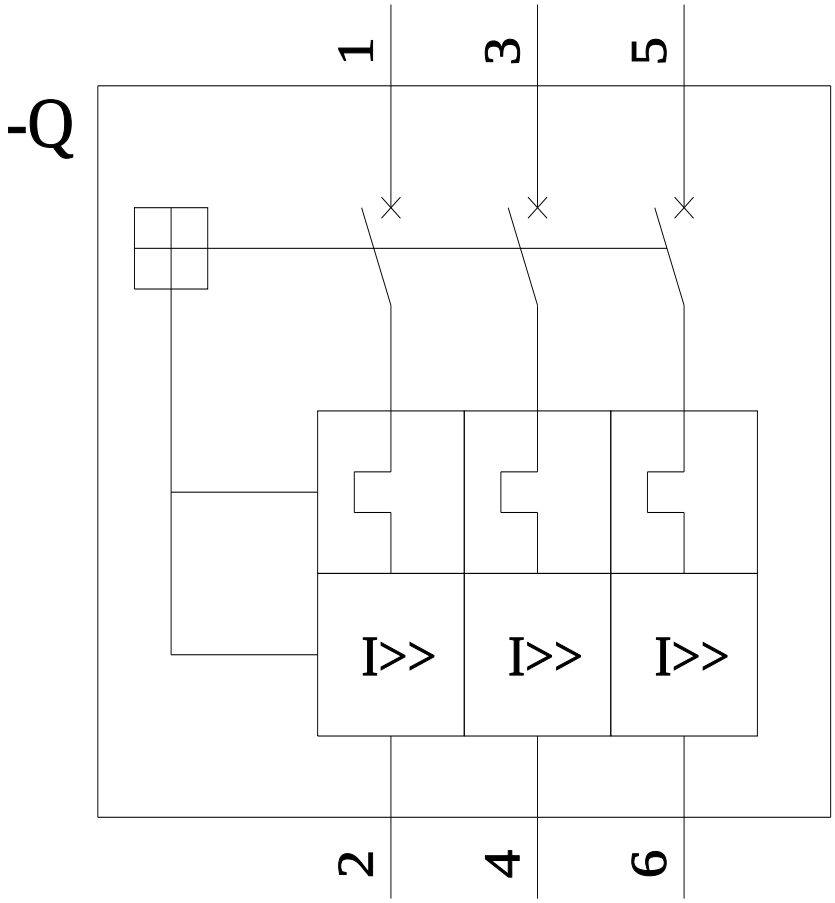

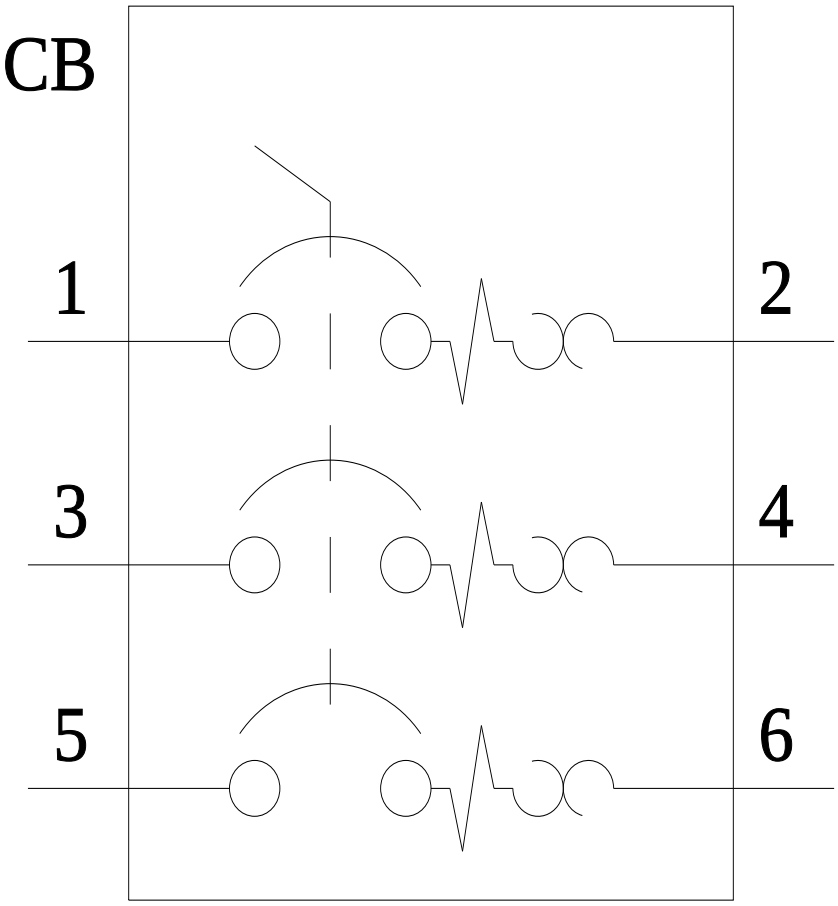

last modified: 7/14/2022

Subject to change without notice
© Copyright Siemens

Subject to change without notice
© Copyright Siemens