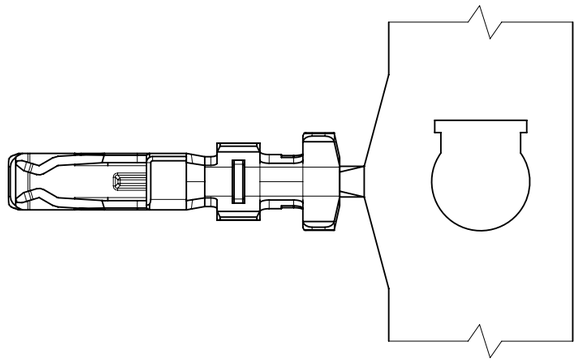

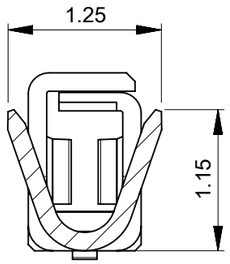

SECTION Z-Z

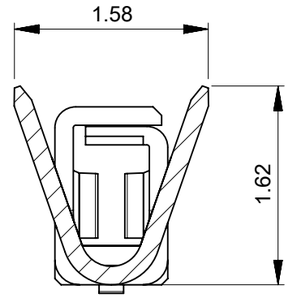

SECTION Y-Y

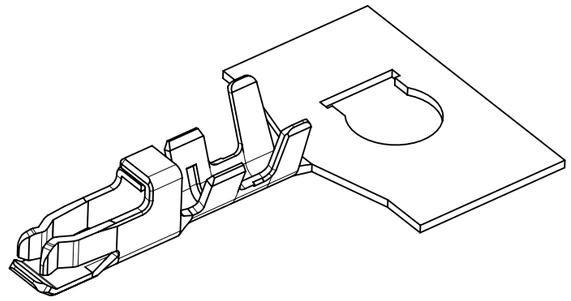

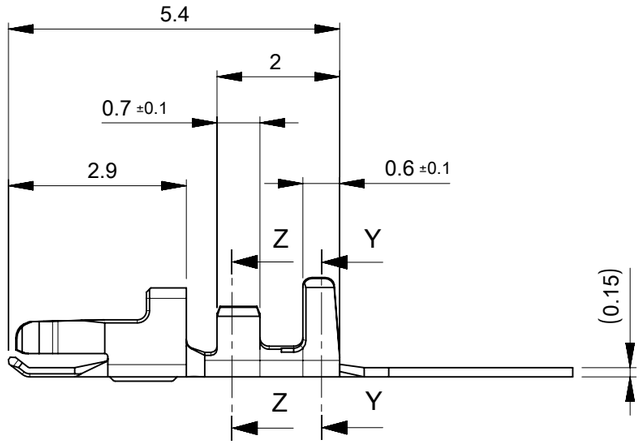

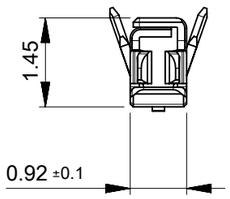

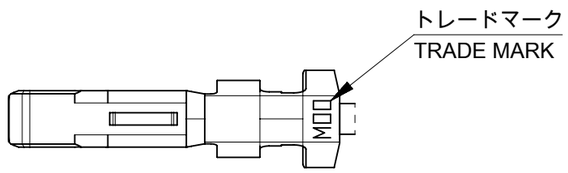

注記 NOTES

1. 材料及び仕上げ(めっき仕様) : TABLE1参照
   MATERIAL AND FINISHED(PLATING SPECIFICATION) : SEE TABLE 1
2. 製品仕様書、コネクタ取扱説明書、適合ハウジング、適合嵌合相手についてはSHEET 2をご参照ください。
   PLEASE REFER TO SHEET 2 FOR PRODUCT SPECIFICATION, APPLICATION SPECIFICATION APPLICABLE HOUSING, MATE WITH.
3. 本製品は金めっき品である。錫めっき品は5054311000-SD PSD 000をご参照ください。
   THIS PRODUCT IS A GOLD PLATING. PLEASE REFER TO 5054311000-SD PSD 000 FOR TIN PLATING.
4. 発注番号
   ORDER NUMBER

505431 1*00

番号 NO.	接点部 金めっき厚 CONTACT GOLD PLATING THICKNESS [MICROMETER MINIMUM]
1	0.1
2	0.38
3	0.76

1 TABLE 1

材質及び仕上げ (めっき仕様) MATERIAL AND FINISHED (PLATING SPECIFICATION)
銅合金 COPPER ALLOY
接点部 : 金めっき　めっき厚は注記4参照 CONTACT : GOLD PLATING PLATING THICKNESS : SEE NOTE4.
ニッケルめっき(下地) : 0.5 MICROMETER MINIMUM NICKEL (UNDER PLATING)

DOCUMENT STATUS	P1	RELEASE DATE	2022/11/30 03:03:42

Φ0.78-1.02mm	AWG#26~30 MM² : 0.049~0.136	リール REEL	連鎖状 CHAIN	5054311*00
絶縁被覆外径 INSULATION DIAMETER	適用電線範囲 WIRE RANGE	梱包形態 PACKAGING	端子形状 FORM	発注番号 ORDER NUMBER

THIS DRAWING CONTAINS INFORMATION THAT IS PROPRIETARY TO MOLEX ELECTRONIC TECHNOLOGIES, LLC AND SHOULD NOT BE USED WITHOUT WRITTEN PERMISSION

DIMENSION UNITS	SCALE
mm	NTS

GENERAL TOLERANCES (UNLESS SPECIFIED)

ANGULAR TOL	±	3.0 °
4 PLACES	±	0.2
3 PLACES	±	0.2
2 PLACES	±	0.2
1 PLACE	±	0.2
0 PLACES	±	0.2

DRAFT WHERE APPLICABLE MUST REMAIN WITHIN DIMENSIONS

CURRENT REV DESC:

EC NO: 720259
DRWN: SOKUMURA01 2022/10/28
CHK'D: SAKIYAMA 2022/11/28
APPR: AIDA 2022/11/30

INITIAL REVISION:
DRWN: RWATANABE01 2017/09/15
APPR: TKANEKO 2017/09/26

THIRD ANGLE PROJECTION

DRAWING	SERIES
A3-SIZE	505431

molex

MICRO-LOCK PLUS 1.25 W/B
RECEPTACLE CRIMP TERMINAL
GOLD PLATING

PRODUCT CUSTOMER DRAWING

DOCUMENT NUMBER	DOC TYPE	DOC PART	REVISION
5054311100-SD	PSD	000	D

MATERIAL NUMBER	CUSTOMER	SHEET NUMBER
SEE TABLE	GENERAL	1 OF 2

FORMAT: master_tb_mod-A3
REVISION: J1
DATE: 2021/05/01

△2 適用製品及び各種仕様書
APPLICABLE PRODUCTS AND VARIOUS SPECIFICATIONS

梱包仕様書 PACKING SPECIFICATION	5054319200 PS 200

列数 NUMBER OF ROWS		SINGLE			
ローハロゲン対応 LOW HALOGEN COMPLIANT		NOT COMPLIANT		COMPLIANT	
適合ハウジング シリーズ番号 APPLICABLE HOUSING SERIES NUMBER		505565**0*		204532**0*	
適合嵌合相手 MATE WITH	嵌合タイプ MATING TYPE	VERTICAL	RIGHT ANGLE	VERTICAL	RIGHT ANGLE
	シリーズ番号 SERIES NUMBER	505568**** 3, 5, 8	505567**** 3, 5, 8	204530**** 3, 5, 8	204529**** 3, 5, 8
製品仕様書 PRODUCT SPECIFICATION		5055650002 PS 000		2045320000-PS PS 001	
取扱説明書 APPLICATION SPECIFICATION		5055650000-AS PS 000			

列数 NUMBER OF ROWS		DUAL			
ローハロゲン対応 LOW HALOGEN COMPLIANT		NOT COMPLIANT		COMPLIANT	
適合ハウジング シリーズ番号 APPLICABLE HOUSING SERIES NUMBER		505432**0*		204523**0*	
適合嵌合相手 MATE WITH	嵌合タイプ MATING TYPE	VERTICAL	RIGHT ANGLE	VERTICAL	RIGHT ANGLE
	シリーズ番号 SERIES NUMBER	505433**** 2, 3, 4, 5, 6, 9	505448**** 3, 5, 9	204520**** 2, 3, 4, 5, 6, 9	204519**** 3, 5, 9
製品仕様書 PRODUCT SPECIFICATION		5054320000 PS 006		2045230002-PS PS 000	
取扱説明書 APPLICATION SPECIFICATION		5054320000-AS PS 000			

製品嵌合図は各"適合嵌合相手"図面参照のこと
MATING VIEW : REFER TO EACH "MATE WITH" PART DRAWING.

THIS DRAWING CONTAINS INFORMATION THAT IS PROPRIETARY TO MOLEX ELECTRONIC TECHNOLOGIES, LLC AND SHOULD NOT BE USED WITHOUT WRITTEN PERMISSION

DIMENSION UNITS	mm
SCALE	NTS
GENERAL TOLERANCES (UNLESS SPECIFIED)	
ANGULAR TOL	± 3.0 °
4 PLACES	± 0.2
3 PLACES	± 0.2
2 PLACES	± 0.2
1 PLACE	± 0.2
0 PLACES	± 0.2
DRAFT WHERE APPLICABLE MUST REMAIN WITHIN DIMENSIONS	

CURRENT REV DESC:

EC NO: 720259
DRWN: SOKUMURA01 2022/10/28
CHK'D: SAKIYAMA 2022/11/28
APPR: AIDA 2022/11/30

INITIAL REVISION:
DRWN: RWATANABE01 2017/09/15
APPR: TKANEKO 2017/09/26

molex

MICRO-LOCK PLUS 1.25 W/B
RECEPTACLE CRIMP TERMINAL
GOLD PLATING

PRODUCT CUSTOMER DRAWING

DOCUMENT NUMBER	DOC TYPE	DOC PART	REVISION
5054311100-SD	PSD	000	D

THIRD ANGLE PROJECTION	DRAWING	SERIES	MATERIAL NUMBER	CUSTOMER	SHEET NUMBER
	A3-SIZE	505431	SEE TABLE	GENERAL	2 OF 2

DOCUMENT STATUS	P1	RELEASE DATE	2022/11/30 03:03:42

FORMAT: master-lb-prod-A3
REVISION: J1
DATE: 2021/05/01