T598B155K050AHS200

T598, Tantalum, Polymer Tantalum, 1.5 uF, 10%, 50 VDC, SMD, Polymer, Molded, Low ESR, AEC-Q200, 200 mOhms, 3528, 2mm

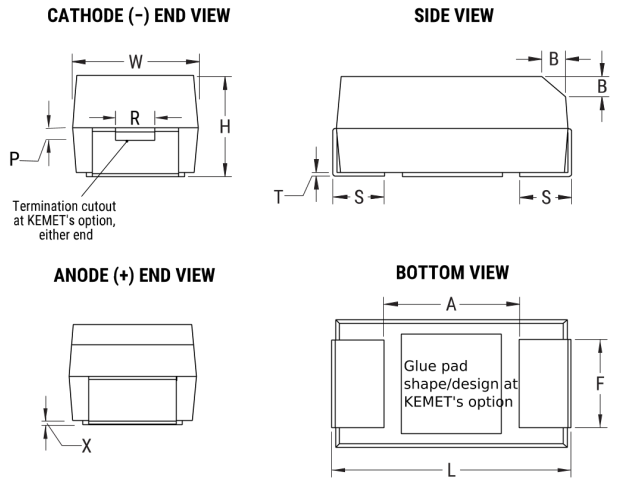

Click here for the 3D model.

Dimensions

Footprint	3528
L	3.5mm +/-0.2mm
W	2.8mm +/-0.2mm
H	1.9mm +/-0.1mm
T	0.13mm REF
S	0.8mm +/-0.3mm
F	2.2mm +/-0.1mm
A	1.1mm MIN
B	0.4mm +/-0.15mm
P	0.5mm REF
R	1mm REF
X	0.1mm +/-0.1mm

Packaging Specifications

Packaging	T&R, 178mm
Packaging Quantity	2000

General Information

Series	T598
Dielectric	Polymer Tantalum
Style	SMD Chip
Description	SMD, Polymer, Molded, Low ESR, AEC-Q200
Features	Automotive (Surge testing at 25C / 10 cycles)
RoHS	No
Prop 65	⚠ **WARNING:** Cancer and reproductive harm - http://www.p65warnings.ca.gov.
SCIP Number	b064b03e-bd75-42af-b342-1fe94dec2340
Termination	Tin Lead (SnPb)
Qualifications	AEC-Q200
AEC-Q200	Yes
Typical Component Weight	94.9 mg
Shelf Life	52 Weeks
MSL	3

Specifications

Capacitance	1.5 uF
Capacitance Tolerance	10%
Voltage DC	50 VDC (105C), 33.5 VDC (125C)
Temperature Range	-55/+125°C
Rated Temperature	105°C
Humidity	85C, 85% RH, load, 1000 Hours
Dissipation Factor	8% 120Hz 25C
Failure Rate	N/A
ESR	200 mOhms (100kHz 25C)
Ripple Current	820 mA (rms, 100kHz 45C), 574 mA (rms, 105C), 205 mA (rms, 125C)
Leakage Current	7.5 uA (5min 25°C)

Statements of suitability for certain applications are based on our knowledge of typical operating conditions for such applications, but are not intended to constitute - and we specifically disclaim - any warranty concerning suitability for a specific customer application or use. This Information is intended for use only by customers who have the requisite experience and capability to determine the correct products for their application. Any technical advice inferred from this Information or otherwise provided by us with reference to the use of our products is given gratis, and we assume no obligation or liability for the advice given or results obtained.

© 2006 - 2024 KEMET