794072-1 SUPERSEDED

MATE-N-LOK | Mini-Universal MATE-N-LOK

TE Internal #: 794072-1

TE Internal Description: 24P MINI UMNL HDR W/DH SN

View on TE.com >

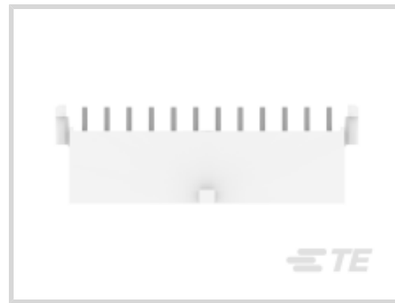

Product Compliance

For compliance documentation, visit the product page on TE.com>

EU RoHS Directive 2011/65/EU	Not Compliant
EU ELV Directive 2000/53/EC	Compliant with Exemptions
China RoHS 2 Directive MIIT Order No 32, 2016	Restricted Materials Above Threshold
EU REACH Regulation (EC) No. 1907/2006	Current ECHA Candidate List: JUNE 2025 (250) Candidate List Declared Against: JUNE 2023 (235) SVHC > Threshold: Pb (13% in Component Part) Article Safe Usage Statements: Do not eat, drink or smoke when using this product. Wash thoroughly after handling. Recycle if possible and dispose of the article by following all applicable governmental regulations relevant to your geographic location.
Halogen Content	Low Halogen - Br, Cl, F < 900 ppm per homogenous material. Also BFR/CFR/PVC Free
Solder Process Capability	Not lead free process capable

Product Compliance Disclaimer

This information is provided based on reasonable inquiry of our suppliers and represents our current actual knowledge based on the information they provided. This information is subject to change. The part numbers that TE has identified as EU RoHS compliant have a maximum concentration of 0.1% by weight in homogenous materials for lead, hexavalent chromium, mercury, PBB, PBDE, DBP, BBP, DEHP, DIBP, and 0.01% for cadmium, or qualify for an exemption to these limits as defined in the Annexes of Directive 2011/65/EU (RoHS2). Finished electrical and electronic equipment products will be CE marked as required by Directive 2011/65/EU. Components may not be CE marked. Additionally, the part numbers that TE has identified as EU ELV compliant have a maximum concentration of 0.1% by weight in homogenous materials for lead, hexavalent chromium, and mercury, and 0.01% for cadmium, or qualify for an exemption to these limits as defined in the Annexes of Directive 2000/53/EC (ELV). Regarding the REACH Regulation, the information TE provides on SVHC in articles for this part number is based on the latest European Chemicals Agency (ECHA) 'Guidance on requirements for substances in articles' posted at this URL: https://echa.europa.eu/guidance-documents/guidance-on-reach

Also in the Series | Mini-Universal MATE-N-LOK

Connector Contacts(89)

Connector Hardware(4)

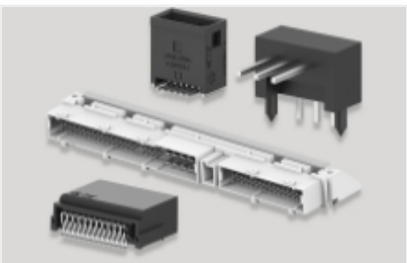

PCB Headers & Receptacles(93)

Power Contacts(89)

Rectangular Connector Housings(104)

Rectangular Power Connectors(196)

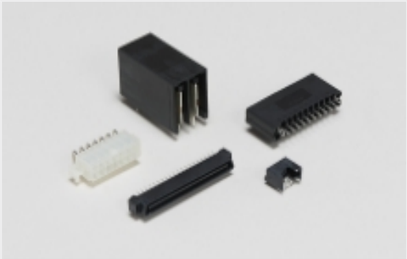

Standard Rectangular Connectors(104)

Customers Also Bought

TE Part #114017-ZZ
SEALING PLUG, SIZE 12/16, WHT

TE Part #CAT-D48-ST273
DEUTSCH Solid Contacts

TE Part #CAT-D487-W416
Wedgelocks: DEUTSCH DT

TE Part #DT04-2P
REC, 2P, GRY, N

TE Part #DT06-2S
PLG, 2P, GRY, N

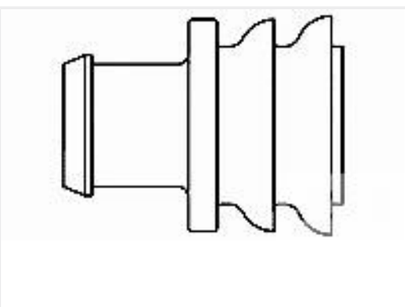

TE Part #281934-2
SINGLE WIRE SEAL

TE Part #CAT-AM71-CH8172
AMP SUPERSEAL 1.5MM, CONNECTOR HOUSING

Documents

Product Drawings

24P MINI UMNL HDR W/DH SN

English

CAD Files

3D PDF

3D

Customer View Model

ENG_CVM_CVM_794072-1_F.2d_dxf.zip

English

Customer View Model

ENG_CVM_CVM_794072-1_F.3d_igs.zip

English

Customer View Model

ENG_CVM_CVM_794072-1_F.3d_stp.zip

English

By downloading the CAD file I accept and agree to the Terms and Conditions of use.

Datasheets & Catalog Pages

SOFT_SHELL_PIN_AND_SOCKET_CONNECTORS_CATALOG

English

Product Specifications

Application Specification

English

Instruction Sheets

Instruction Sheet (U.S.)

English

Instruction Sheet (U.S.)

English

Agency Approvals

UL Report

English