Enabling the Electronics Revolution

PIHER sensing systems
an Amphenol® company

MSC-360

Miniature Hall-Effect Rotary Position Sensor

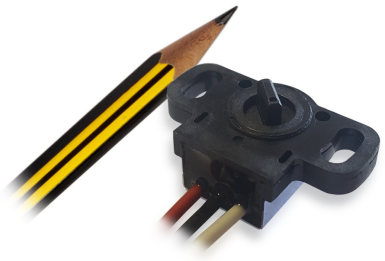

DESCRIPTION

This rotary sensor provides a perfect fit for preferential use in space constraint applications. Despite its lightweight and miniature size of only 28mm x 17mm, this hall effect sensor delivers high performance with up to 360º electrical angle (without dead zone), 12bit resolution, extended life and EMI & ESD protection.

The MSC-360 can easily be tailored to customers' needs providing high price-performance ratio even for the most demanding environments.

KEY FEATURES



True, contactless operation
Without any gears or mechanical interfaces the sensor is easily assembled and calibrated and subject to limited wear and tear over lifetime.



Fits in the smallest of spaces
With a packaging space of less than 28 x 17 x 13 mm and less than 7g this rotary sensor can be used in even the most space-constraint application.



Made for harsh environments
The rugged package protects the sensor from dust, moisture, vibration and extreme temperatures for usage in the most demanding environments.



Integrated shaft
The magnet is securely fastened to the shaft and acts as only moving component in the sensor.

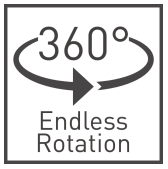

360 degree absolute position feedback
Endless mechanical rotational angle without dead band, keeps the position on power loss with programmable electrical angles from 90 to 360 degrees.



Adaptable to your requirements
Programmable transfer function as well as different output protocols and redundancy levels available.

POTENTIAL APPLICATIONS

Industrial
- Instrumentation
- Autonomous warehouse robotics
- Robotics and automation feedback
- Hand controls
- Float level sensor

Home and Building Automation
- HVAC systems
- Valve monitoring

Transportation
- EGR valve
- Gear position sensor
- Autonomous steering
- Joystick controls
- Hand throttle position

MSC-360

Miniature Hall-Effect Rotary Position Sensor

MECHANICAL SPECIFICATIONS

Rotational life[1]	Up to 7,000,000 cycles
Mechanical range	360° (endless rotation)
Magnetic shielding	Yes, models without shielding also available
Shaft Diameter	5.9mm

[1] Higher rotational life upon request

ELECTRICAL SPECIFICATIONS

Linearity[1,2]	±1.5% absolute
Electrical angular range[1]	Programmable from 90° to 360°
Output protocols	Analog (Ratiometric), PWM
Output	Simple Redundant
Resolution Analog, PWM	Up to 12 bit
Supply voltage[1]	5V ±10%
Supply current Simple output	Typ 12.6 mA
Voltage protection	+20V / -10V
Self-diagnostic features	yes

[1] Other specifications available
[2] Ferromagnetic materials close to the sensor (i.e. mounting surface) may affect the sensor's linearity.

ENVIRONMENTAL SPECIFICATIONS

Characteristic	Standard	Level
Operating and storage temperature[1]	n/a	-40° to +125°C
Shock	EN 60068-2-27	500 m/s², 11 ms, 3 axis 3 times (Room Temp.)
Vibration	EN 60068-2-6	200 m/s², 5 ~ 500 Hz 10 min, 3 axis 2 hours (Room Temp.)
Sealing	IEC 60529	IP67
EMS	ISO 11452-2, 3	100 V/m, 1 MHz ~ 1 GHz
ESD	IEC 61000-4-2	Contact discharge - case to each terminal: ±15kV Contact discharge - between each terminal: ±15kV

Check availability for other specifications

HOW TO ORDER (EXAMPLE: MSC360-1A-C004-ERA360-05K)

Simple Output - Analogic and PWM

MSC360 - _ _ - C _ _ _ _ - ERA _ _ _ - 05 K - _ _ _ _

Series	Type	Output[1]	Output function[2]	Electric rotational angle[4]	Voltage supply	Temperature range	PWM Frequency Hz[5]
	1 = simple 2 = redundant	A = analogic P = PWM	C0004 C0005 C0006 C0007 C0021 C0022	ERA090 ERA091 ... ERA360	05 = 5V ±10%	K = -40°C to +125°C	[...] / F2K5= 2.5kHz F156 = 156.25Hz F312 = 312.5Hz F625 = 625Hz F1K2 = 1.25kHz F05K = 5kHz F10K = 10kHz F20K = 20kHz

1 The analog output is ratiometric, proportional to input supply voltage.
2 Other output functions available, please check availability. Enter CXXXX as long as the new output function is not defined.
3 Leave empty if not applicable. Default frequency is 2.5kHz

MSC-360

Miniature Hall-Effect Rotary Position Sensor

DIMENSIONS (MM)

Simple output model with shielding

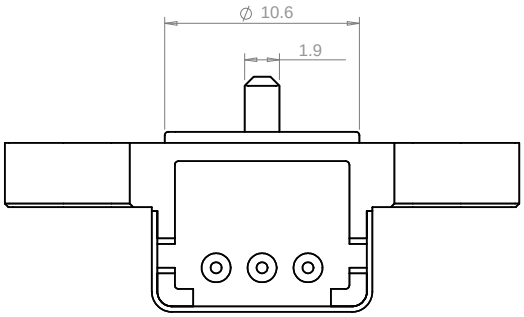

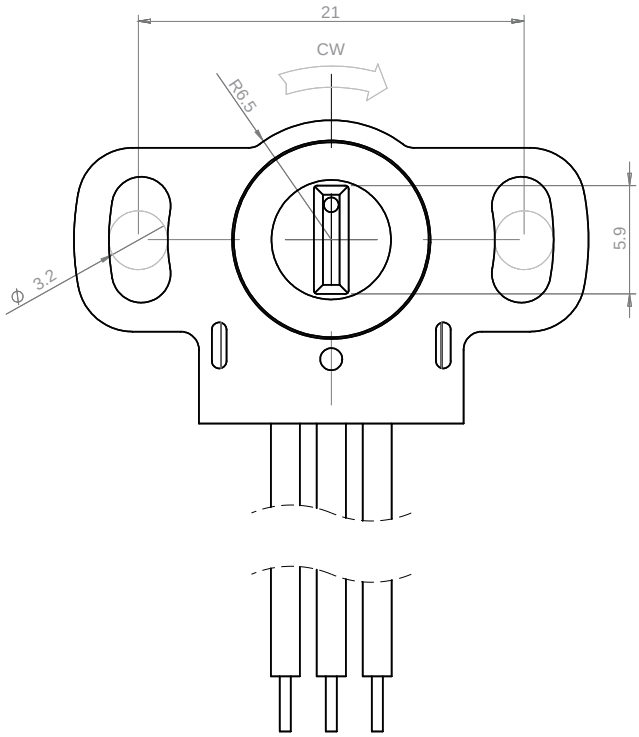

CONNECTION SCHEME

Red	= Vcc
Black	= Ground
White	= Out

Wires: 3x 22 AWG TXL SAE J1128



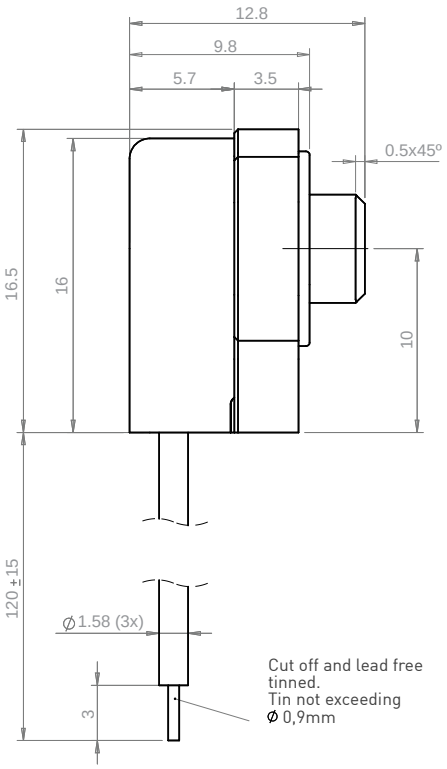

Rotor is shown at 180° position. Sensor is delivered at random position

Download the STEP file here: www.piher.net

PACKAGING

Bulk



Box dimensions (mm): 250x160x95

Units per set: 10 sensors inside a EDS bag

Each box includes 10 sets

MSC-360

Miniature Hall-Effect Rotary Position Sensor

OUTPUT VOLTAGE DEPENDING ON SHAFT POSITION

MSC360-1A-C0004-ERA360-05K

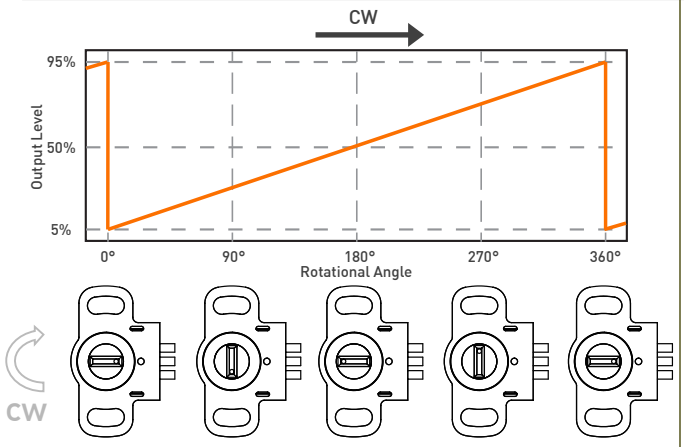

MSC360-1A-C0005-ERA360-05K

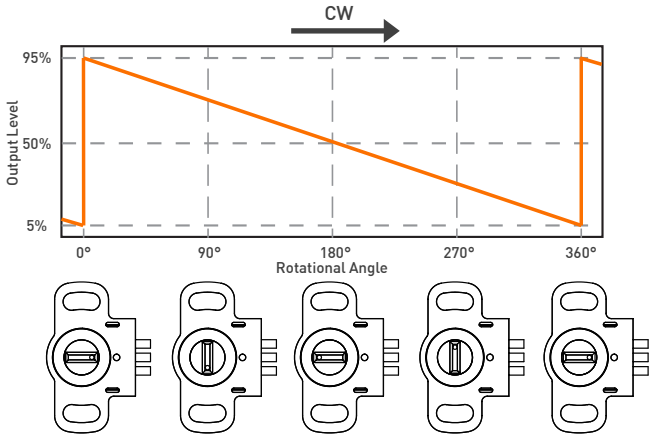

MSC360-1A-C0006-ERA060-05K

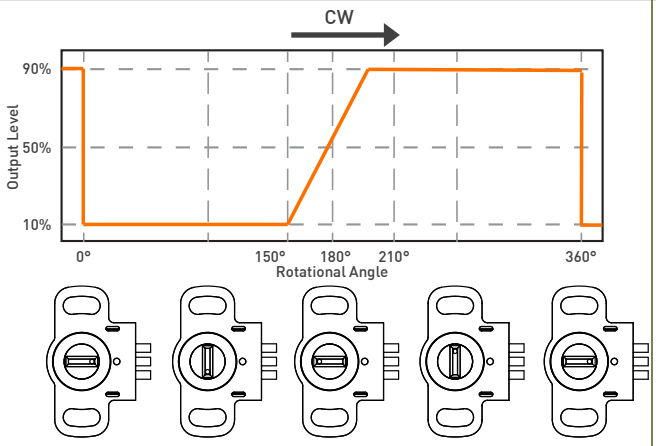

MSC360-1A-C0007-ERA180-05K

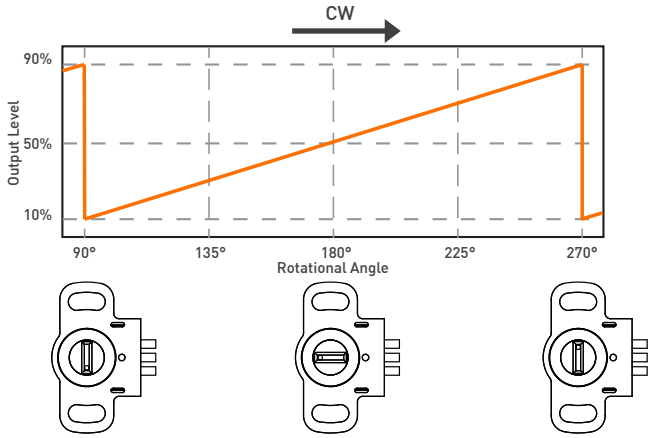

MSC360-2A-C0021-ERA360-05K

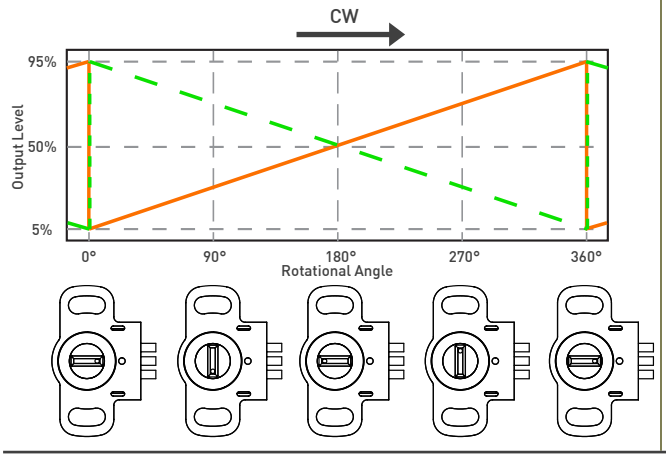

MSC360-1A-C0022-ERA090-05K

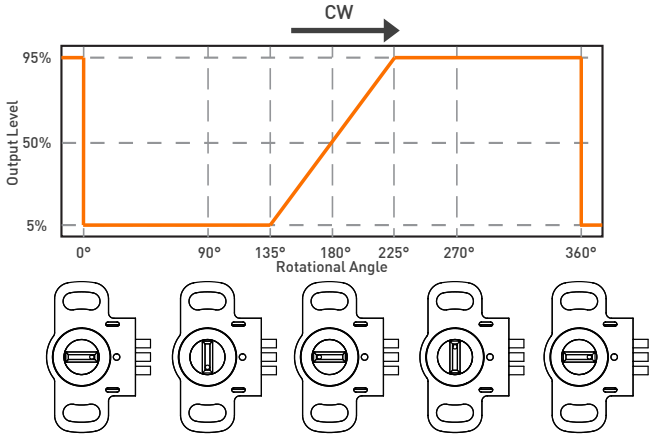

Custom output functions with positive and negative slopes on request.

Please always use the latest updated datasheets and 3D models published on our website.
All our products are customizable to meet your specific needs and requirements.

Disclaimer:
The product information in this catalog is for reference purposes. Please consult for the most up to date and accurate design information.
Piher Sensors & Controls S.A., its affiliates, agents, and employees, and all persons acting on its or their behalf (collectively, "Piher"), disclaim any and all liability for any errors, inaccuracies or incompleteness contained herein or in any other disclosure relating to any product described herein.
Piher disclaims any and all liability arising out of the use or application of any product described herein or of any information provided herein to the maximum extent permitted by law. The product specifications do not expand or otherwise modify Piher's terms and conditions of sale, including but not limited to the warranty expressed therein, which apply to these products.
No license, express or implied, by estoppel or otherwise, to any intellectual property rights is granted by this document or by any conduct of Piher.
The products shown herein are not designed for use in medical, life-saving, or life-sustaining applications unless otherwise expressly indicated. Customers using or selling Piher products not expressly indicated for use in such applications do so entirely at their own risk and agree to fully indemnify Piher for any damages arising or resulting from such use or sale. Please contact authorized Piher personnel to obtain written terms and conditions regarding products designed for such applications.
Product names and markings noted herein may be trademarks of their respective owners. Information contained in and/or attached to this catalogue may be subject to export control regulations of the European Community, USA, or other countries. Each recipient of this document is responsible to ensure that usage and/or transfer of any information contained in this document complies with all relevant export control regulations. If you are in any doubt about the export control restrictions that apply to this information, please contact the sender immediately. For any Piher Exports, Note: All products / technologies are EAR99 Classified commodities. Exports from the United States are in accordance with the Export Administration Regulations. Diversion contrary to US law is prohibited.

CONTACT
sales@piher.net
+34 948 820 450

NEED QUICK HELP?
Our AI Virtual Assistant is available 24/7 to provide instant support—visit **chat.piher.info** now!

Rev:11102024 © Piher Sensors & Controls S.A.