Data sheet



DFS20A-B1A1C001260

DFS2x

INCREMENTAL ENCODERS

SICK
Sensor Intelligence.



Illustration may differ

Ordering information

Type	part no.
DFS20A-B1A1C001260	1079882

Other models and accessories ➜ www.sick.com/DFS2x

Detailed technical data

Safety-related parameters

$MTTF_D$ (mean time to dangerous failure)	330 years (EN ISO 13849-1) [1]

[1] This product is a standard product and does not constitute a safety component as defined in the Machinery Directive. Calculation based on nominal load of components, average ambient temperature 40 °C, frequency of use 8760 h/a. All electronic failures are considered hazardous. For more information, see document no. 8015532.

Performance

Pulses per revolution	1,260
Measuring step	± 90°, electric/pulses per revolution
Measuring step deviation	± 0.008° pulses 100 ... 10,000
Error limits	± 0.03°

Interfaces

Communication interface	Incremental
Communication Interface detail	TTL / RS-422
Number of signal channels	6-channel
Initialization time	40 ms [1]
Output frequency	820 kHz
Load current	30 mA
Operating current	50 mA (without load)

[1] Valid positional data can be read once this time has elapsed.

Electronics

Connection type	Male connector, M12, 8-pin, radial [1]
Supply voltage	4.5 ... 5.5 V
Reference signal, number	1
Reference signal, position	180°, electric, gated with A

[1] The Zero-Set function is not available with 6-pin MS connector or M12 connector options.
[2] Short-circuit opposite to another channel or GND permissable for maximum 30 s.

Reverse polarity protection	✓
Short-circuit protection of the outputs	✓ [2]

[1] The Zero-Set function is not available with 6-pin MS connector or M12 connector options.
[2] Short-circuit opposite to another channel or GND permissable for maximum 30 s.

Mechanics

Mechanical design	Solid shaft, Servo flange
Shaft diameter	1/4"With flat
Shaft length	16 mm
Weight	+ 0.4 kg [1]
Shaft material	Stainless steel 1,4305
Flange material	Aluminum
Housing material	Aluminum
Start up torque	0.5 Ncm (+20 °C)
Operating torque	0.3 Ncm (+20 °C)
Permissible shaft loading	80 N (radial) 40 N (axial)
Operating speed	≤ 9,000 min^{-1}
Moment of inertia of the rotor	15 gcm^2
Bearing lifetime	3.6 x 10^9 revolutions
Angular acceleration	≤ 500,000 rad/s^2

[1] Based on encoder with MS male connector.

Ambient data

EMC	According to EN 61000-6-2 and EN 61000-6-3
Enclosure rating	IP65, shaft side (IEC 60529) IP67, housing side (IEC 60529)
Permissible relative humidity	90 % (Condensation not permitted)
Operating temperature range	–30 °C ... +85 °C
Storage temperature range	–40 °C ... +100 °C, without package
Resistance to shocks	100 g, 11 ms (EN 60068-2-27)
Resistance to vibration	30 g, 10 Hz ... 2,000 Hz (EN 60068-2-6)

Certificates

EU declaration of conformity	✓
UK declaration of conformity	✓
ACMA declaration of conformity	✓
China-RoHS	✓
Information according to Art. 3 of Data Act (Regulation EU 2023/2854)	✓

Classifications

ECLASS 5.0	27270501
ECLASS 5.1.4	27270501
ECLASS 6.0	27270590

ECLASS 6.2	27270590
ECLASS 7.0	27270501
ECLASS 8.0	27270501
ECLASS 8.1	27270501
ECLASS 9.0	27270501
ECLASS 10.0	27270501
ECLASS 11.0	27270501
ECLASS 12.0	27270501
ETIM 5.0	EC001486
ETIM 6.0	EC001486
ETIM 7.0	EC001486
ETIM 8.0	EC001486
UNSPSC 16.0901	41112113

Dimensional drawing DFS20 servo flange mount, radial connector outlet M12 and MS, cable outlet

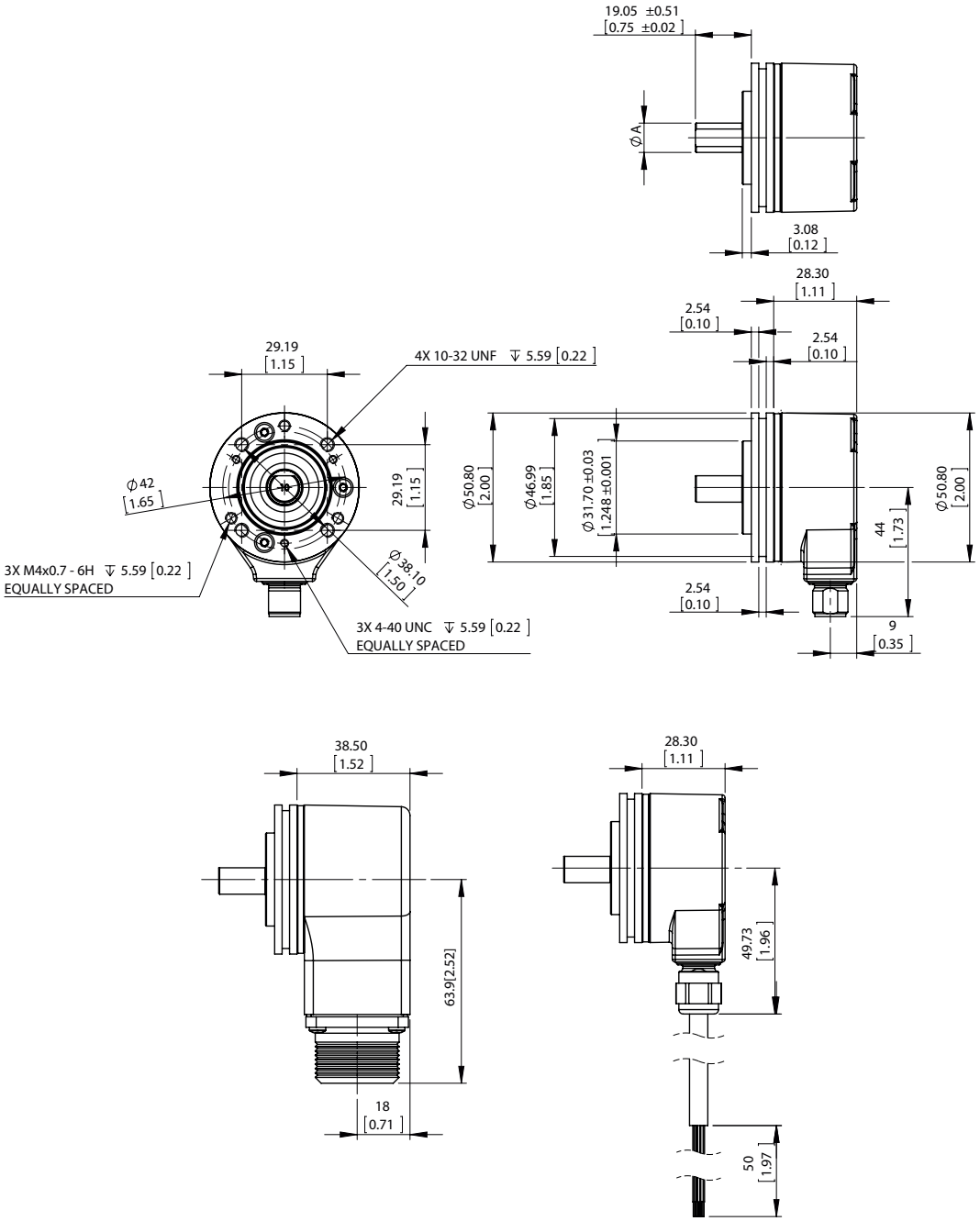

Dimensions in mm (inch)

Type	Shaft diameterA
DFS2x-x1xxxxxxx	1/4″
DFS2x-x2xxxxxxxDFS2x-xCxxxxxxx	3/8″
DFS2x-xFxxxxxxx	1/2″
DFS2x-x3xxxxxxx	6 mm
DFS2x-x4xxxxxxx	10 mm

PIN assignment View of M12 male device connector on encoder

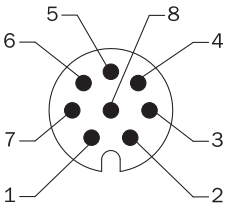

M12, 8-pin	MS, 10-pin	MS, 7-pin	MS, 6-pin	Cable, 9-wire	Signal	Description
1	H	-	-	Brown	$\overline{A}$	Signal wire
2	A	A	E	White	A	Signal wire
3	I	-	-	Black	$\overline{B}$	Signal wire
4	B	B	D	Pink	B	Signal wire
5	J	-	-	Yellow	$\overline{Z}$	Signal wire
6	C	C	C	Purple	Z	Signal wire
7	F	F	A	Blue	GND	GND
8	D	D	B	Red	Us	Supply voltage
-	E	E	-	Orange	0-SET	Input signal
-	G	G	F	-	Housing	Electrically connected to the housing potential
-	-	-	-	Blank	Drain wire	Bare wire parallel to the braided screen
-	-	-	-	Screen	Screen	Screen connected to housing on encoder side

Diagrams Signal Outputs with Counter Clock-wise Counting Direction Option Selected (B leads A for clock-wise rotation). Complement signals AN, BN and ZN are not shown.

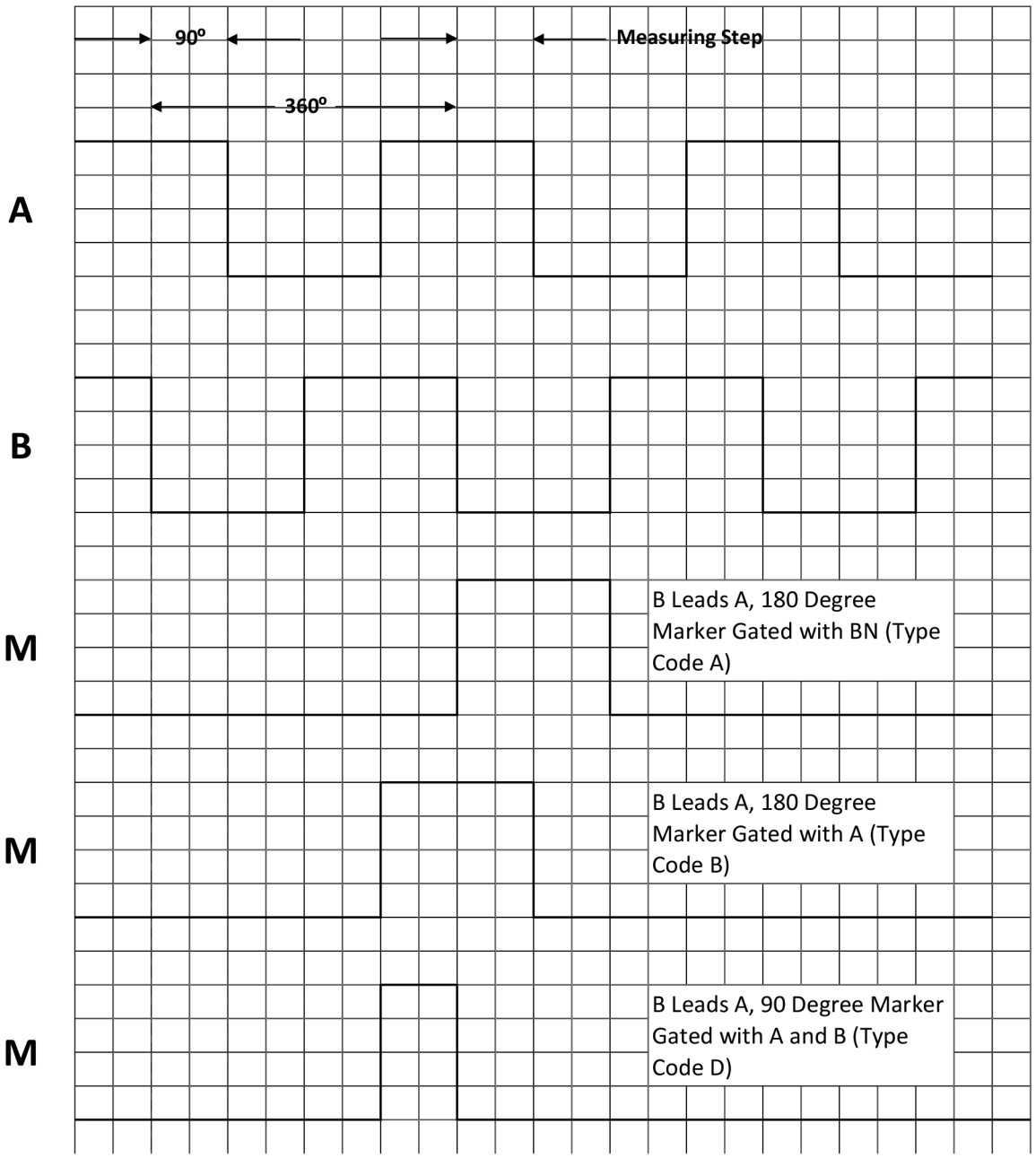

Cw with view on the encoder shaft in direction "A", compare dimensional drawing.

Diagrams Signal Outputs with Clock-wise Counting Direction Option Selected (A leads B for clock-wise rotation). Complement signals AN, BN and ZN are not shown.

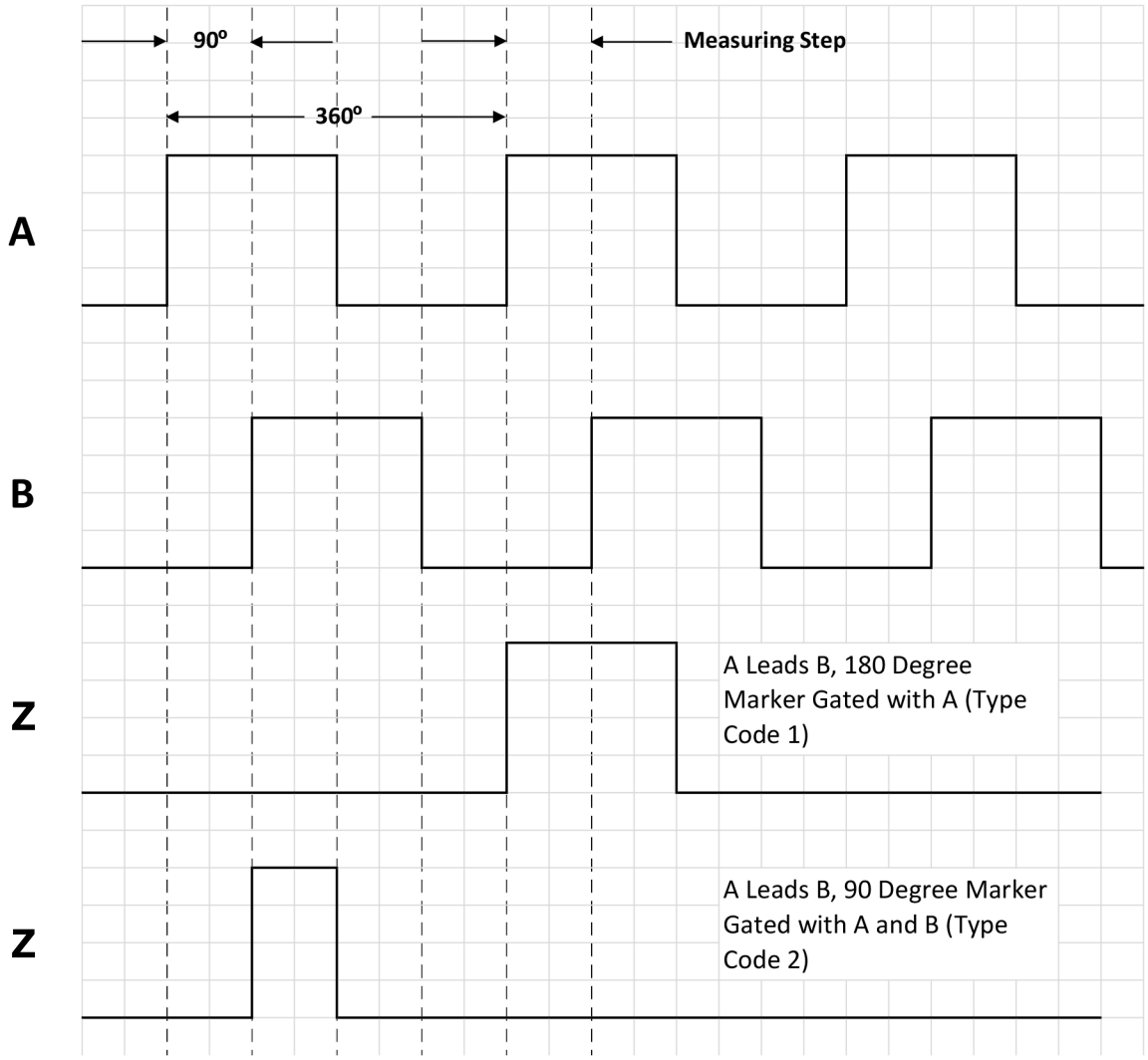

Cw with view on the encoder shaft in direction "A", compare dimensional drawing.

maximum revolution range

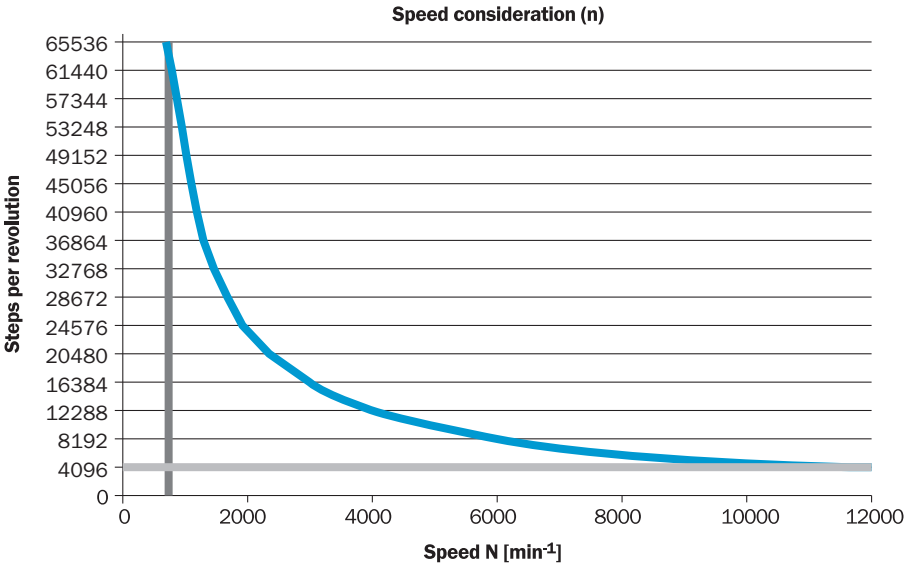

Recommended accessories

Other models and accessories ➜ www.sick.com/DFS2x

	Brief description	Type	part no.
connectors and cables			
	• **Connection type head A:** Female connector, M12, 8-pin, straight • **Connection type head B:** Flying leads • **Signal type:** Incremental, SSI • **Cable:** 2 m, 8-wire, PUR, halogen-free • **Description:** Incremental, shieldedSSI • **Connection systems:** Flying leads	DOL-1208-G02MAC1	6032866
	• **Connection type head A:** Female connector, M12, 8-pin, straight • **Connection type head B:** Flying leads • **Signal type:** Incremental, SSI • **Cable:** 5 m, 8-wire, PUR, halogen-free • **Description:** Incremental, shieldedSSI • **Connection systems:** Flying leads	DOL-1208-G05MAC1	6032867
	• **Connection type head A:** Female connector, M12, 8-pin, straight • **Connection type head B:** Flying leads • **Signal type:** Incremental, SSI • **Cable:** 10 m, 8-wire, PUR, halogen-free • **Description:** Incremental, shieldedSSI • **Connection systems:** Flying leads	DOL-1208-G10MAC1	6032868
	• **Connection type head A:** Female connector, M12, 8-pin, straight • **Connection type head B:** Flying leads • **Signal type:** Incremental, SSI • **Cable:** 20 m, 8-wire, PUR, halogen-free • **Description:** Incremental, shieldedSSI • **Connection systems:** Flying leads	DOL-1208-G20MAC1	6032869
	• **Connection type head A:** Female connector, M12, 8-pin, straight, A-coded • **Signal type:** Incremental, SSI • **Cable:** CAT5, CAT5e • **Description:** Incremental, shieldedSSI • **Connection systems:** IDC quick connection • **Permitted cross-section:** 0.14 mm² ... 0.34 mm²	DOS-1208-GA01	6045001

SICK AT A GLANCE

SICK is one of the leading manufacturers of intelligent sensors and sensor solutions for industrial applications. A unique range of products and services creates the perfect basis for controlling processes securely and efficiently, protecting individuals from accidents and preventing damage to the environment.

We have extensive experience in a wide range of industries and understand their processes and requirements. With intelligent sensors, we can deliver exactly what our customers need. In application centers in Europe, Asia and North America, system solutions are tested and optimized in accordance with customer specifications. All this makes us a reliable supplier and development partner.

Comprehensive services complete our offering: SICK LifeTime Services provide support throughout the machine life cycle and ensure safety and productivity.

For us, that is “Sensor Intelligence.”

WORLDWIDE PRESENCE:

Contacts and other locations –www.sick.com