Data sheet



DBS60E-REFCD1024

DBS60

INCREMENTAL ENCODERS

SICK
Sensor Intelligence.



Illustration may differ

Ordering information

Type	part no.
DBS60E-REFCD1024	1099927

Other models and accessories ➜ www.sick.com/DBS60

Detailed technical data

Safety-related parameters

$MTTF_D$ (mean time to dangerous failure)	500 years (EN ISO 13849-1) [1]

[1] This product is a standard product and does not constitute a safety component as defined in the Machinery Directive. Calculation based on nominal load of components, average ambient temperature 40 °C, frequency of use 8760 h/a. All electronic failures are considered hazardous. For more information, see document no. 8015532.

Performance

Pulses per revolution	1,024
Measuring step	≤ 90°, electric/pulses per revolution
Measuring step deviation	± 18° / pulses per revolution
Error limits	Measuring step deviation x 3
Duty cycle	≤ 0.5 ± 5 %

Interfaces

Communication interface	Incremental
Communication Interface detail	TTL / HTL [1]
Number of signal channels	6-channel
Initialization time	< 5 ms [2]
Output frequency	+ 300 kHz [3]
Load current	≤ 30 mA, per channel
Power consumption	≤ 0.5 W (without load)

[1] Output level depends on the supply voltage.
[2] Valid signals can be read once this time has elapsed.
[3] Up to 450 kHz on request.

Electronics

Connection type	Male connector, M12, 8-pin, radial
Supply voltage	4.5 ... 30 V
Reference signal, number	1
Reference signal, position	90°, electric, logically gated with A and B
Reverse polarity protection	✓
Short-circuit protection of the outputs	✓ [1]

[1] Short-circuit opposite to another channel, US or GND permissable for maximum 30 s.

Mechanics

Mechanical design	Through hollow shaft, rear clamping
Shaft diameter	12 mm
Flange type / stator coupling	1-sided stator coupling, slot, screw hole circle radius 31.5–48.5 mm
Weight	+ 0.25 kg [1]
Shaft material	Stainless steel
Flange material	Aluminum
Housing material	Aluminum
Start up torque	+ 0.5 Ncm (+20 °C)
Operating torque	0.4 Ncm (+20 °C)
Permissible movement static	± 0.3 mm (radial) ± 0.5 mm (axial) [2]
Permissible movement dynamic	± 0.1 mm (radial) ± 0.2 mm (axial) [2]
Operating speed	6,000 min^{-1} [3]
Maximum operating speed	9,000 min^{-1} [4]
Moment of inertia of the rotor	50 gcm^2
Bearing lifetime	3.6 x 10^9 revolutions
Angular acceleration	≤ 500,000 rad/s^2

[1] Based on encoder with male connector or cable with male connector.
[2] Not apllicable for stator coupling type C and K.
[3] Allow for self-heating of 2.6 K per 1,000 rpm when designing the operating temperature range.
[4] Maximum speed which does not cause mechanical damage to the encoder. Impact on the service life and signal quality is possible. Please note the maximum output frequency.

Ambient data

EMC	According to EN 61000-6-2 and EN 61000-6-3
Enclosure rating	IP65, housing side (IEC 60529) [1] IP65, shaft side (IEC 60529)
Permissible relative humidity	90 % (Condensation not permitted)
Operating temperature range	–30 °C ... +100 °C, at maximum 3,000 pulses per revolution [2]
Storage temperature range	–40 °C ... +100 °C, without package
Resistance to shocks	250 g, 3 ms (EN 60068-2-27)

[1] With mating connector fitted.
[2] These values relate to all mechanical versions including recommended accessories unless otherwise noted.

Resistance to vibration	30 g, 10 Hz ... 2,000 Hz (EN 60068-2-6)

[1] With mating connector fitted.

[2] These values relate to all mechanical versions including recommended accessories unless otherwise noted.

Certificates

EU declaration of conformity	✓
UK declaration of conformity	✓
ACMA declaration of conformity	✓
China-RoHS	✓
cULus certificate	✓
Information according to Art. 3 of Data Act (Regulation EU 2023/2854)	✓

Classifications

ECLASS 5.0	27270501
ECLASS 5.1.4	27270501
ECLASS 6.0	27270590
ECLASS 6.2	27270590
ECLASS 7.0	27270501
ECLASS 8.0	27270501
ECLASS 8.1	27270501
ECLASS 9.0	27270501
ECLASS 10.0	27270501
ECLASS 11.0	27270501
ECLASS 12.0	27270501
ETIM 5.0	EC001486
ETIM 6.0	EC001486
ETIM 7.0	EC001486
ETIM 8.0	EC001486
UNSPSC 16.0901	41112113

Dimensional drawing

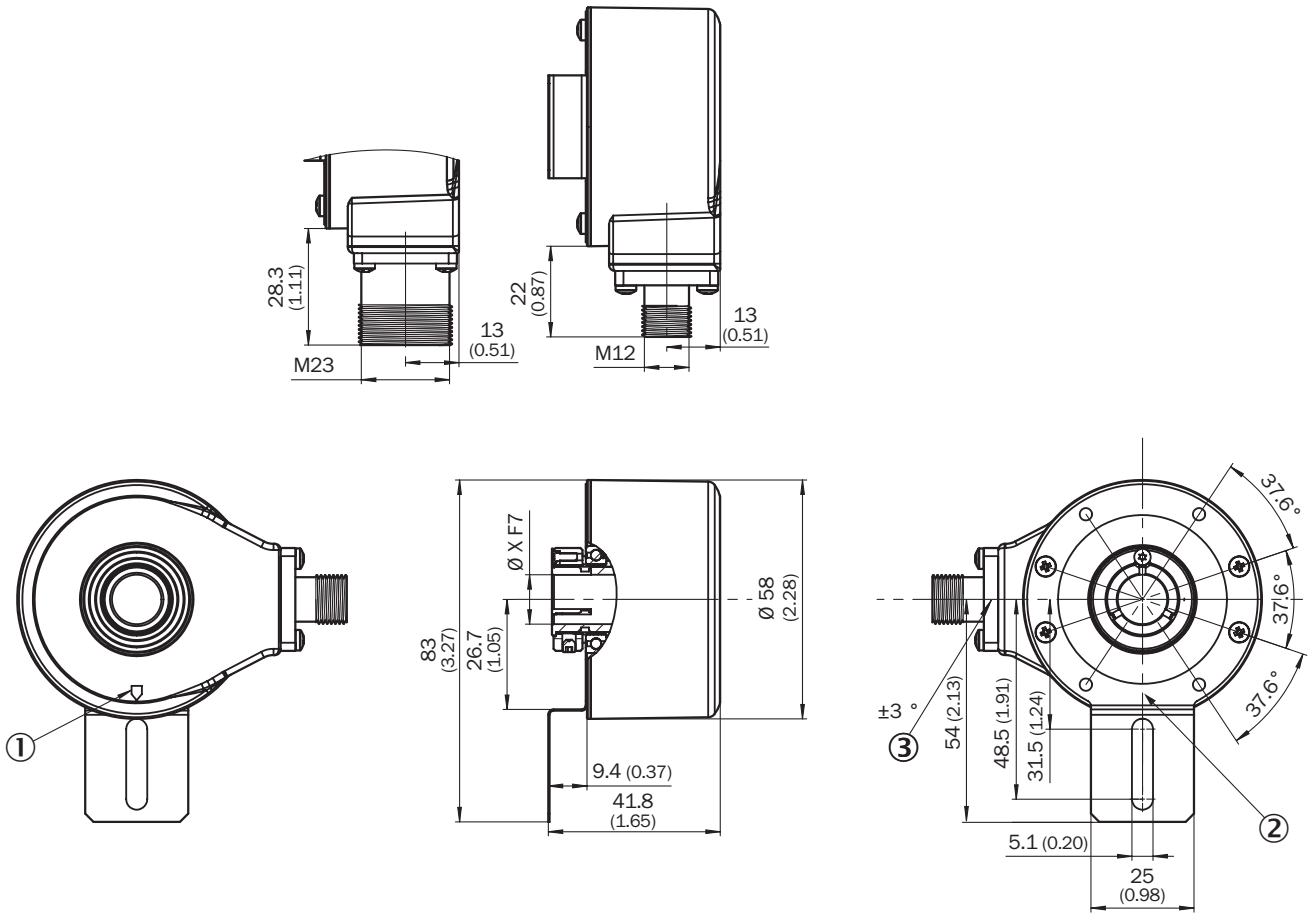

Dimensions in mm (inch)
XF7 values see shaft diameter table for through hollow shaft, clamping at the back
① Zero pulse mark on housing
② zero pulse mark on flange under stator coupling
③ male connector tolerance in relation to hole pattern

TypeThrough hollow shaft with rear clamping	Shaft diameter XF7
DBS60x-RAxxxxxxxxDBS60x-R1xxxxxxxx	6 mm
DBS60x-RBxxxxxxxxDBS60x-R2xxxxxxxx	8 mm
DBS60x-RCxxxxxxxxDBS60x-R3xxxxxxxx	3/8″
DBS60x-RDxxxxxxxxDBS60x-R4xxxxxxxx	10 mm
DBS60x-RExxxxxxxxDBS60x-R5xxxxxxxx	12 mm
DBS60x-RFxxxxxxxxDBS60x-R6xxxxxxxx	1/2″
DBS60x-RGxxxxxxxxDBS60x-R7xxxxxxxx	14 mm
DBS60x-RHxxxxxxxxDBS60x-R8xxxxxxxx	15 mm
DBS60x-RJxxxxxxxx	5/8″

–

Attachment specifications Through hollow shaft with rear clamping

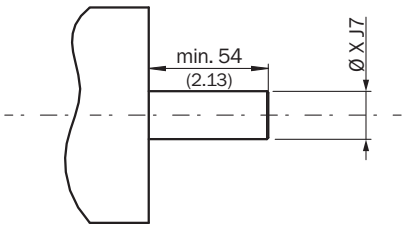

customer side

TypeThrough hollow shaft with rear clamping	Shaft diameter xj7
DBS60x-RAxxxxxxxxDBS60x-R1xxxxxxxx	6 mm
DBS60x-RBxxxxxxxxDBS60x-R2xxxxxxxx	8 mm
DBS60x-RCxxxxxxxxDBS60x-R3xxxxxxxx	3/8″
DBS60x-RDxxxxxxxxDBS60x-R4xxxxxxxx	10 mm
DBS60x-RExxxxxxxxDBS60x-R5xxxxxxxx	12 mm
DBS60x-RFxxxxxxxxDBS60x-R6xxxxxxxx	1/2″
DBS60x-RGxxxxxxxxDBS60x-R7xxxxxxxx	14 mm
DBS60x-RHxxxxxxxxDBS60x-R8xxxxxxxx	15 mm
DBS60x-RJxxxxxxxx	5/8″
–	

PIN assignment

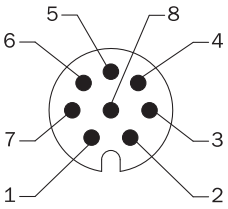

view of M12 male device connector on cable / housing

Wire colors (cable connection)	Male connector M12, 8-pin	Male connector M23, 12-pin	TTL/HTL 6-channel signal	Explanation
Brown	1	6	A-	Signal wire
White	2	5	A	Signal wire
Black	3	1	B-	Signal wire
Pink	4	8	B	Signal wire
Yellow	5	4	Z-	Signal wire
Purple	6	3	Z	Signal wire
Blue	7	10	GND	Ground connection
Red	8	12	$+U_s$	Supply voltage
-	-	9	Not assigned	Not assigned
-	-	2	Not assigned	Not assigned
-	-	11	Not assigned	Not assigned
-	-	7	Not assigned	Not assigned

Wire colors (cable connection)	Male connector M12, 8-pin	Male connector M23, 12-pin	TTL/HTL 6-channel signal	Explanation
Screen	Screen	Screen	Screen	Screen connected to encoder housing

Diagrams

Pulses per revolution

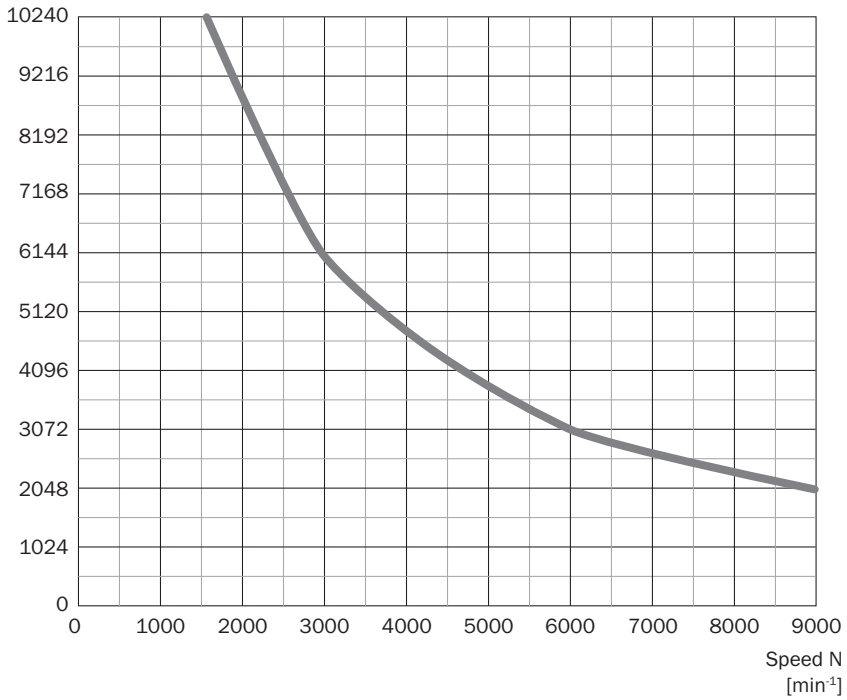

Diagrams Signal outputs for electrical interfaces TTL and HTL

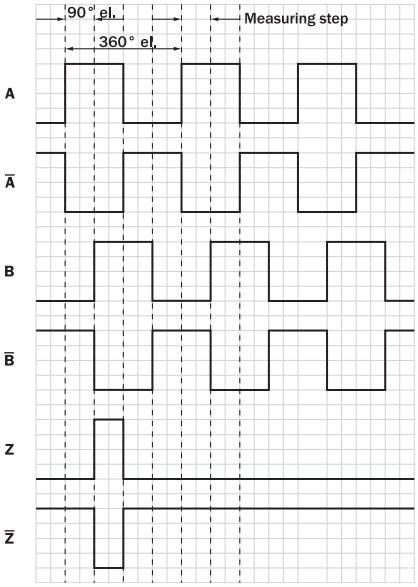

Cw with view on the encoder shaft in direction "A", compare dimensional drawing.

Supply voltage	Output
4,5 V ... 5,5 V	TTL
10 V ... 30 V	TTL
10 V ... 27 V	HTL
4,5 V ... 30 V	TTL/HTL universal
4,5 V ... 30 V	TTL

Operation note Through hollow shaft with rear clamping

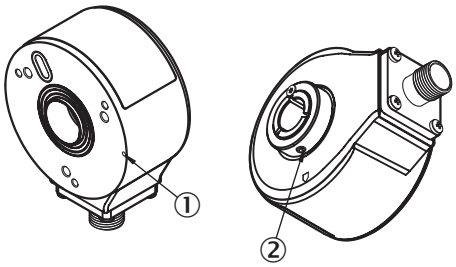

① Zero pulse mark on flange
② Zero pulse is active when screw of clamping is inline with zero pulse mark on flange or housing mark

Recommended accessories

Other models and accessories ➜ www.sick.com/DBS60

	Brief description	Type	part no.
connectors and cables			
	• **Connection type head A:** Flying leads • **Connection type head B:** Flying leads • **Signal type:** SSI, Incremental, HIPERFACE® • **Items supplied:** By the meter • **Cable:** 8-wire, PUR, halogen-free • **Description:** SSI, shielded, Incremental, HIPERFACE®	LTG-2308-MWENC	6027529
	• **Connection type head A:** Flying leads • **Connection type head B:** Flying leads • **Signal type:** SSI, Incremental • **Items supplied:** By the meter • **Cable:** 11-wire, PUR • **Description:** SSI, shielded, Incremental	LTG-2411-MW	6027530
	• **Connection type head A:** Flying leads • **Connection type head B:** Flying leads • **Signal type:** SSI, Incremental • **Items supplied:** By the meter • **Cable:** 12-wire, PUR, halogen-free • **Description:** SSI, shielded, Incremental	LTG-2512-MW	6027531
	• **Connection type head A:** Flying leads • **Connection type head B:** Flying leads • **Signal type:** SSI, TTL, HTL, Incremental • **Items supplied:** By the meter • **Cable:** 12-wire, UV and saltwater-resistant, PUR, halogen-free • **Description:** SSI, shielded, TTL, HTL, Incremental	LTG-2612-MW	6028516
	• **Connection type head A:** Female connector, M12, 8-pin, straight • **Connection type head B:** Flying leads • **Signal type:** Incremental, SSI • **Cable:** 2 m, 8-wire, PUR, halogen-free • **Description:** Incremental, shieldedSSI • **Connection systems:** Flying leads	DOL-1208-G02MAC1	6032866
	• **Connection type head A:** Female connector, M12, 8-pin, straight • **Connection type head B:** Flying leads • **Signal type:** Incremental, SSI • **Cable:** 5 m, 8-wire, PUR, halogen-free • **Description:** Incremental, shieldedSSI • **Connection systems:** Flying leads	DOL-1208-G05MAC1	6032867
	• **Connection type head A:** Female connector, M12, 8-pin, straight • **Connection type head B:** Flying leads • **Signal type:** Incremental, SSI • **Cable:** 10 m, 8-wire, PUR, halogen-free • **Description:** Incremental, shieldedSSI • **Connection systems:** Flying leads	DOL-1208-G10MAC1	6032868
	• **Connection type head A:** Female connector, M12, 8-pin, straight • **Connection type head B:** Flying leads • **Signal type:** Incremental, SSI • **Cable:** 20 m, 8-wire, PUR, halogen-free • **Description:** Incremental, shieldedSSI • **Connection systems:** Flying leads	DOL-1208-G20MAC1	6032869
	• **Connection type head A:** Female connector, M12, 8-pin, straight • **Connection type head B:** Flying leads • **Signal type:** Incremental, SSI • **Cable:** 25 m, 8-wire, PUR, halogen-free • **Description:** Incremental, shieldedSSI • **Connection systems:** Flying leads	DOL-1208-G25MAC1	6067859
	• **Connection type head A:** Female connector, M12, 8-pin, straight, A-coded • **Signal type:** Incremental, SSI • **Cable:** CAT5, CAT5e • **Description:** Incremental, shieldedSSI • **Connection systems:** IDC quick connection • **Permitted cross-section:** 0.14 mm² ... 0.34 mm²	DOS-1208-GA01	6045001
	• **Connection type head A:** Female connector, M12, 8-pin, straight, A-coded • **Connection type head B:** Male connector, M12, 8-pin, straight, A-coded • **Cable:** 20 m, 8-wire, PUR, halogen-free • **Description:** Shielded	YF2AA8-200S01M-KA18	2099208

	Brief description	Type	part no.
	• **Permitted cross-section:** ≤ 0.25 mm² • **Note:** Drag chain use • **Application:** Drag chain operation		
	• **Connection type head A:** Female connector, M12, 8-pin, straight, A-coded • **Connection type head B:** Male connector, M12, 8-pin, straight, A-coded • **Cable:** 2 m, 8-wire, PUR, halogen-free • **Description:** Shielded • **Permitted cross-section:** ≤ 0.25 mm² • **Note:** Drag chain use • **Application:** Drag chain operation	YF2AA8-020S01M-KA18	2099207
	• **Connection type head A:** Female connector, M12, 8-pin, straight, A-coded • **Connection type head B:** Male connector, M12, 8-pin, straight, A-coded • **Cable:** 5 m, 8-wire, PUR, halogen-free • **Description:** Shielded • **Permitted cross-section:** ≤ 0.25 mm² • **Note:** Drag chain use • **Application:** Drag chain operation	YF2AA8-050S01M-KA18	2099209
	• **Connection type head A:** Female connector, M12, 8-pin, straight, A-coded • **Connection type head B:** Male connector, M12, 8-pin, straight, A-coded • **Cable:** 10 m, 8-wire, PUR, halogen-free • **Description:** Shielded • **Permitted cross-section:** ≤ 0.25 mm² • **Note:** Drag chain use • **Application:** Drag chain operation	YF2AA8-100S01M-KA18	2099210
	• **Connection type head A:** Female connector, M12, 8-pin, angled • **Connection type head B:** Flying leads • **Signal type:** HIPERFACE®, Incremental • **Cable:** 2 m, 8-wire, PUR, halogen-free • **Description:** HIPERFACE®, shieldedIncremental	DOL-1208-W02MAC1	6037724
	• **Connection type head A:** Female connector, M12, 8-pin, angled • **Connection type head B:** Flying leads • **Signal type:** HIPERFACE®, Incremental • **Cable:** 5 m, 8-wire, PUR, halogen-free • **Description:** HIPERFACE®, shieldedIncremental	DOL-1208-W05MAC1	6037725
	• **Connection type head A:** Female connector, M12, 8-pin, angled • **Connection type head B:** Flying leads • **Signal type:** HIPERFACE®, Incremental • **Cable:** 10 m, 8-wire, PUR, halogen-free • **Description:** HIPERFACE®, shieldedIncremental	DOL-1208-W10MAC1	6037726
	• **Connection type head A:** Female connector, M12, 8-pin, angled • **Connection type head B:** Flying leads • **Signal type:** HIPERFACE®, Incremental • **Cable:** 20 m, 8-wire, PUR • **Description:** HIPERFACE®, shieldedIncremental	DOL-1208-W20MAC1	6037727
	• **Connection type head A:** Female connector, M12, 8-pin, angled • **Connection type head B:** Flying leads • **Cable:** 2 m, 8-wire, PVC • **Description:** Shielded • **Connection systems:** Flying leads	DOL-1208-W02MA	6020992
	• **Connection type head A:** Female connector, M12, 8-pin, angled • **Connection type head B:** Flying leads • **Signal type:** Sensor/actuator cable • **Cable:** 2 m, 8-wire, PUR, halogen-free • **Description:** Sensor/actuator cable, shielded • **Connection systems:** Flying leads	DOL-1208-W02MAS01	6029224
	• **Connection type head A:** Female connector, M12, 8-pin, angled • **Connection type head B:** Flying leads • **Cable:** 2 m, 8-wire, PUR, halogen-free • **Description:** Unshielded	DOL-1208-W02MC	6035623
	• **Connection type head A:** Female connector, M12, 8-pin, angled • **Connection type head B:** Flying leads • **Cable:** 5 m, 8-wire, PVC • **Description:** Shielded	DOL-1208-W05MA	6021033

	Brief description	Type	part no.
	• **Connection systems:** Flying leads		
	• **Connection type head A:** Female connector, M12, 8-pin, angled • **Connection type head B:** Flying leads • **Cable:** 5 m, 8-wire, PUR • **Description:** Unshielded	DOL-1208-W05MC	6035624
	• **Connection type head A:** Female connector, M12, 8-pin, angled • **Connection type head B:** Flying leads • **Cable:** 10 m, 8-wire, PUR, halogen-free • **Description:** Unshielded	DOL-1208-W10MC	6035625

SICK AT A GLANCE

SICK is one of the leading manufacturers of intelligent sensors and sensor solutions for industrial applications. A unique range of products and services creates the perfect basis for controlling processes securely and efficiently, protecting individuals from accidents and preventing damage to the environment.

We have extensive experience in a wide range of industries and understand their processes and requirements. With intelligent sensors, we can deliver exactly what our customers need. In application centers in Europe, Asia and North America, system solutions are tested and optimized in accordance with customer specifications. All this makes us a reliable supplier and development partner.

Comprehensive services complete our offering: SICK LifeTime Services provide support throughout the machine life cycle and ensure safety and productivity.

For us, that is “Sensor Intelligence.”

WORLDWIDE PRESENCE:

Contacts and other locations –www.sick.com