ANATECH ELECTRONICS INC
RF & Microwave Filters & Products

# 123.5 MHz Narrow Bandpass Filter

## Part Number: AE123B11490

ISO 9001 REGISTERED FIRM

## Electrical Specifications

**Center Frequency:** 123.5 MHz
**3 dB Bandwidth (BW):** Fo ± 0.5MHz (123-124 MHz)
**Insertion Loss:** 3.5 dB Max @ 123.5 MHz
**Return Loss @ 120 MHz :** 15 dB Min
**Attenuation:** > 18dBr @ 122.5 MHz & 124.5 MHz

**Impedance:** 50 Ohms
**Power Handling:** 25 W CW

## Mechanical

**Connectors: N(F)**
**Dimensions:** 2.70" X 2.12" X 1.25"
**Mounting:** 4-40 Threaded holes

## Environmental

**Operating Temperature:** -20 to +70° C
**Storage Temperature:** -50 to +90° C

## Outline Drawing:

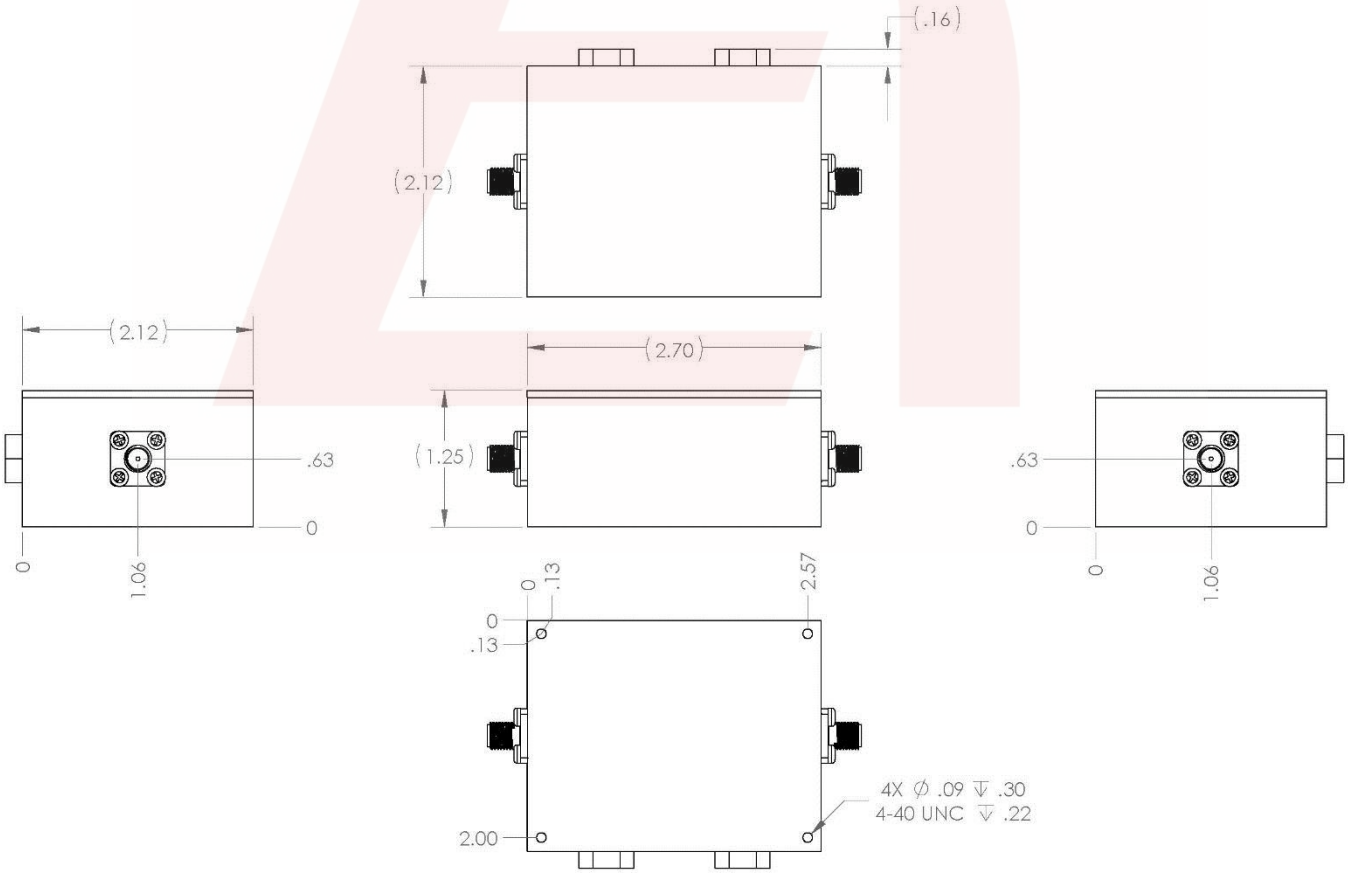


*DS-B11490-02192018-Rev1*


**70 Outwater Lane** **Phone: (973) 772-4242**
**Garfield, NJ 07026** **Fax : (973) 772-4646**
**Email:** sales@anatechelectronics.com
**Web:** www.anatechelectronics.com

ANATECH ELECTRONICS INC
RF & Microwave Filters & Products

# 123.5 MHz Narrow Bandpass Filter

## Part Number: AE123B11490

ISO 9001 REGISTERED FIRM

## Simulated Response

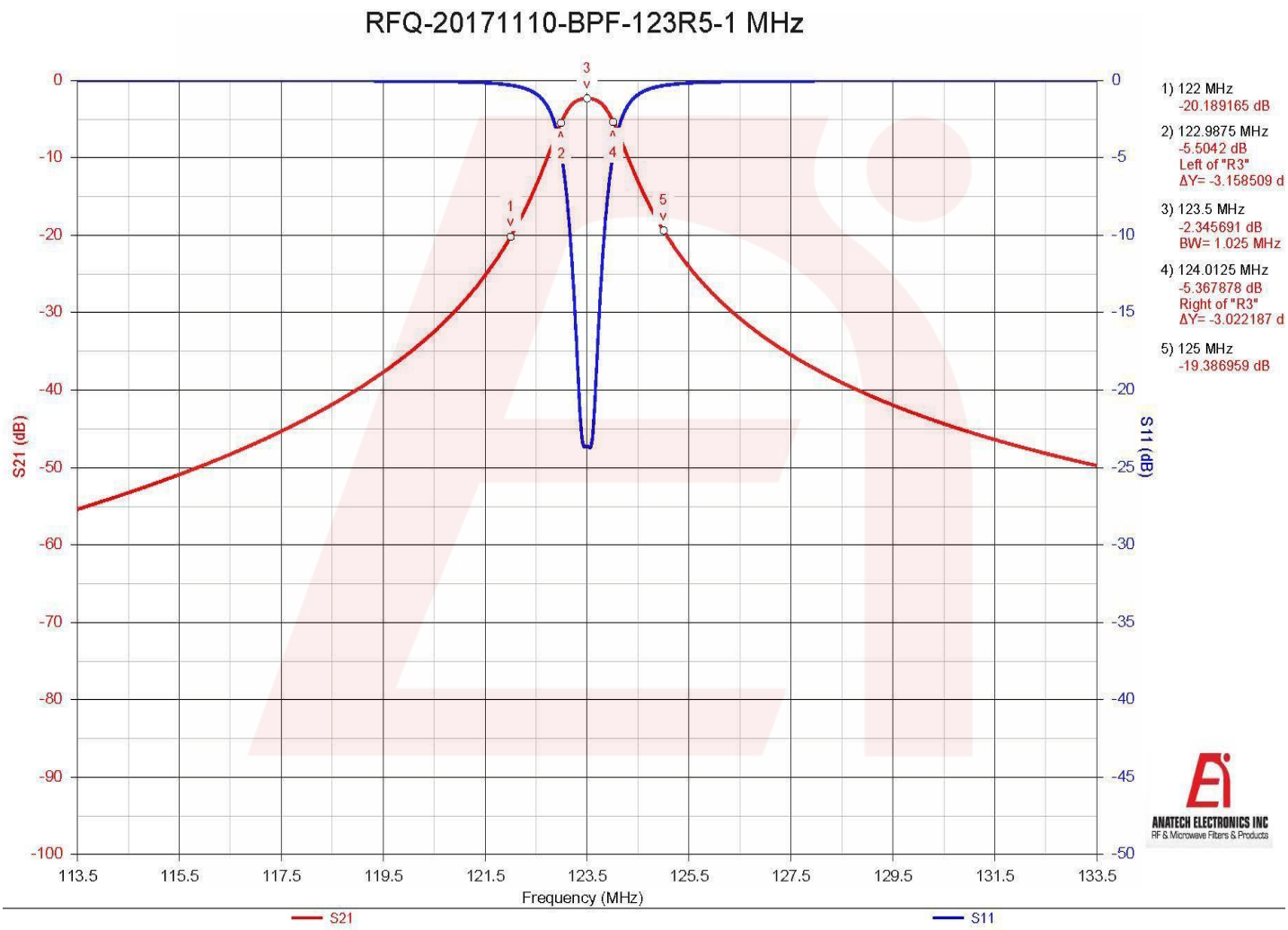


This is a simulated response plot, actual results might differ

*DS-B11490-02192018-Rev1*

**70 Outwater Lane Phone: (973) 772-4242**
**Garfield, NJ 07026 Fax : (973) 772-4646**
**Email: sales@anatechelectronics.com**
**Web: www.anatechelectronics.com**

ANATECH ELECTRONICS INC
RF & Microwave Filters & Products

# 123.5 MHz Narrow Bandpass Filter

# Part Number: AE123B11490

ISO 9001 REGISTERED FIRM

## Simulated Response

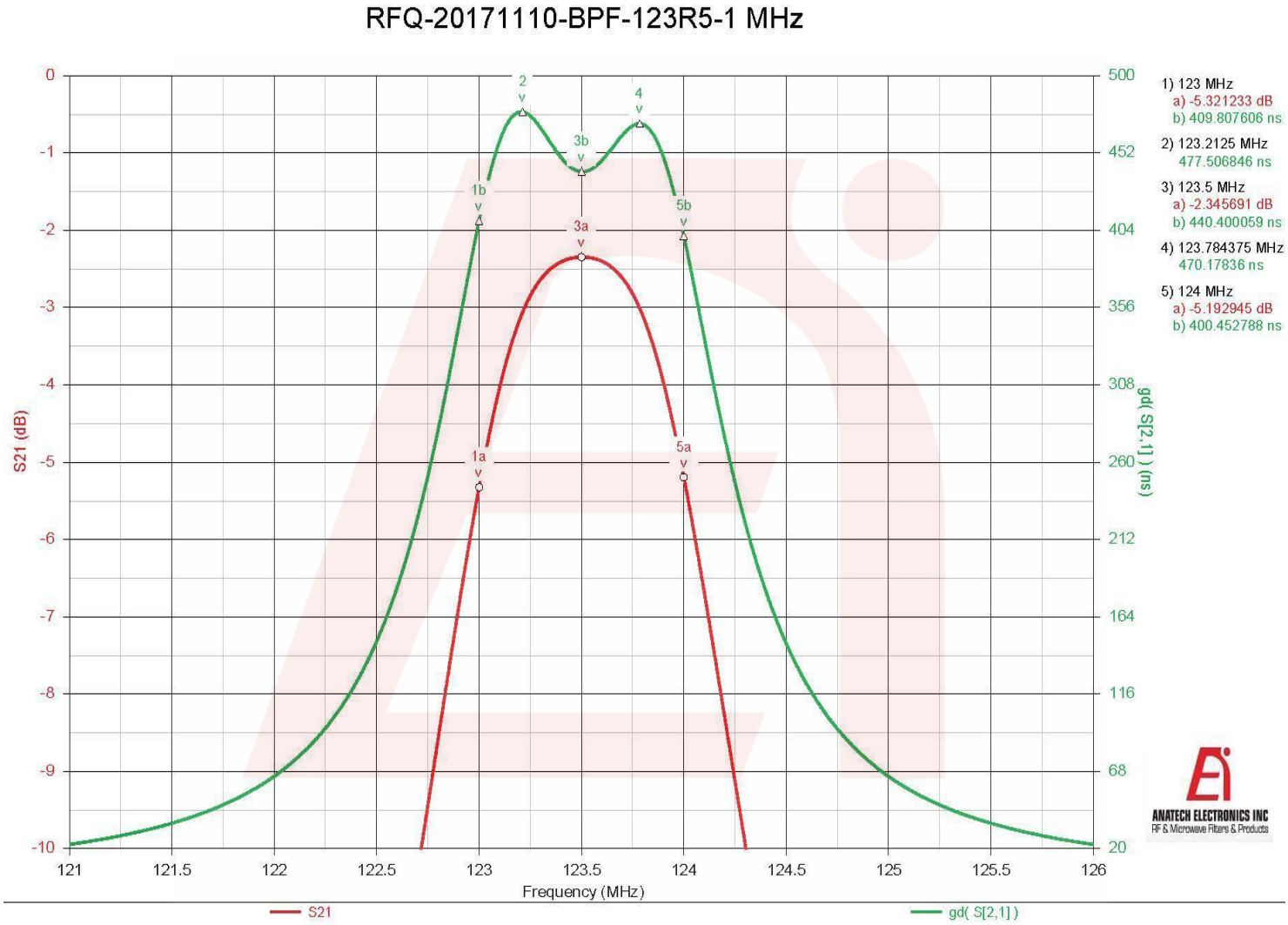


This is a simulated response plot, actual results might differ

*DS-B11490-02192018-Rev1*


**70 Outwater Lane** **Phone: (973) 772-4242**
**Garfield, NJ 07026** **Fax : (973) 772-4646**
**Email: sales@anatechelectronics.com**
**Web: www.anatechelectronics.com**