CONNECTOR P/N	∅D (µm)	FIBER OPTIC CABLE SIZE(mm)
106033-2000	125.5 +1.0 -0.0	3.0
106033-2100		1.6 SIMPLEX
106033-2900		2.0&1.6 DUPLEX

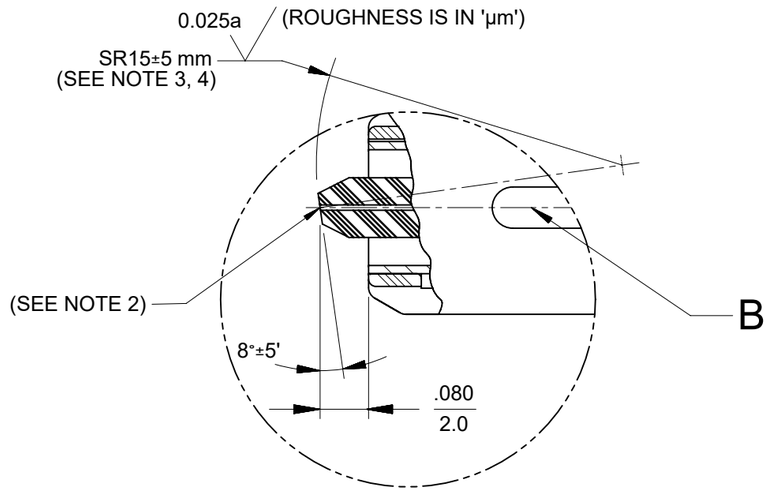

DETAIL A
(SEE NOTE 1)

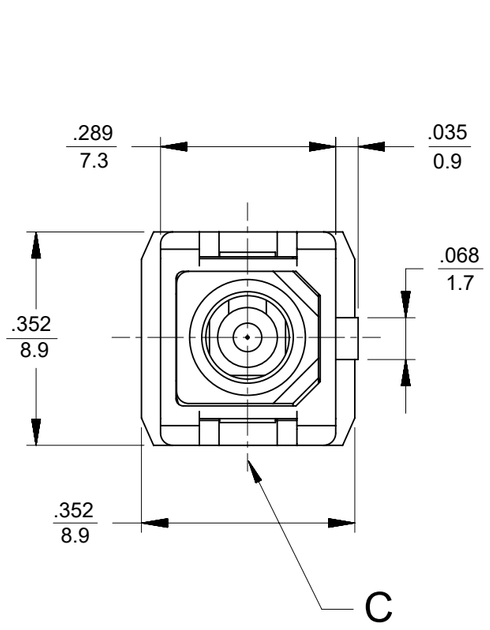

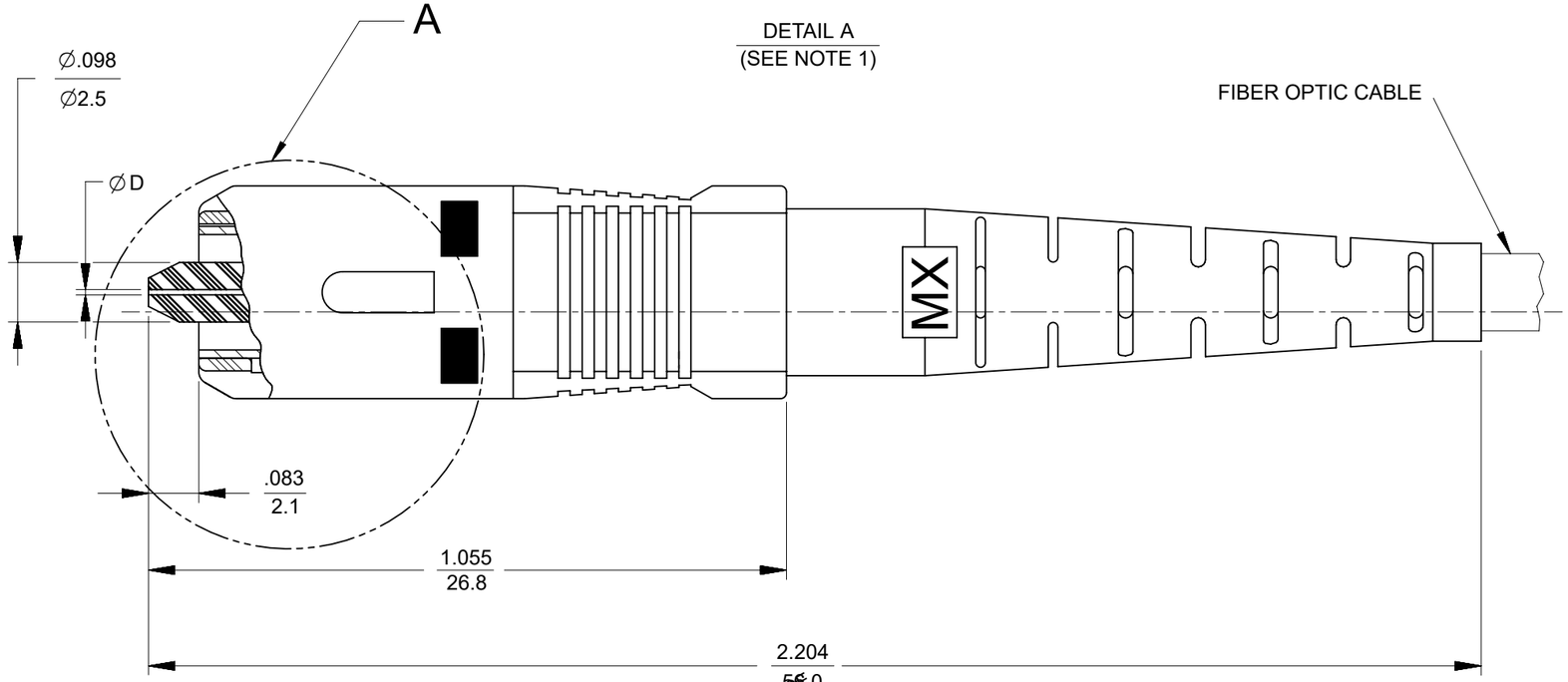

NOTES:

1. ANGLE POLISHING IS ACCOMPLISHED AFTER CONNECTOR IS TERMINATED WITH FIBER AND TUNED.
2. FIBER EXTENSION SHALL BE ±50nm.
3. THE APEX OFFSET OF THE SPHERICAL ENDFACE TO THE AXIS OF THE FERRULE SHALL BE LESS THAN 50 µm.
4. CENTER OF SR 15±5 mm MUST LIE IN THE PLANE FORMED BY AXES "B" AND "C" . MAXIMUM DEVIATION ±.05 mm.

PRE-RELEASE REFERENCE USE ONLY

THIS DRAWING CONTAINS INFORMATION THAT IS PROPRIETARY TO MOLEX ELECTRONIC TECHNOLOGIES, LLC AND SHOULD NOT BE USED WITHOUT WRITTEN PERMISSION

DIMENSION UNITS	SCALE
INCH	4:1

GENERAL TOLERANCES (UNLESS SPECIFIED)

	MM	INCH
4 PLACES	±	±
3 PLACES	±	±
2 PLACES	±	±
1 PLACE	±	±
0 PLACES	±	±
ANGULAR TOL	± 0.5 °	

DRAFT WHERE APPLICABLE MUST REMAIN WITHIN DIMENSIONS

CURRENT REV DESC: REMOVED OBSOLETED PART NUMBER AS PER PCN#510806.

EC NO: 733771
DRWN: SANTHN 2023/01/27
CHK'D: GGA 2023/02/24
APPR: GGA 2023/02/24

INITIAL REVISION:
DRWN: RPACIFICI 2005/09/29
APPR:

molex

SC APC CONNECTOR (TUNABLE)

PRODUCT CUSTOMER DRAWING

DOCUMENT NUMBER	DOC TYPE	DOC PART	REVISION
SD-106033-XX00	PSD	001	A1

THIRD ANGLE PROJECTION	DRAWING	SERIES	MATERIAL NUMBER	CUSTOMER	SHEET NUMBER
	B-SIZE	106033	SEE TABLE	GENERAL MARKET	1 OF 1

DOCUMENT STATUS	P1	RELEASE DATE	2023/02/24 12:54:42

FORMAT: Eng-lega-master-tb-prod-B
REVISION: E1
DATE: 2021/05/01