Data sheet



M40S-65A105AA0

M4000 Area

SAFETY LIGHT CURTAINS

SICK
Sensor Intelligence.



Illustration may differ

Ordering information

Type	part no.
M40S-65A105AA0	1200586

Other models and accessories ➜ www.sick.com/M4000_Area

Detailed technical data

Features

Resolution	80 mm
Scanning range	90 m
Low scanning range	0.5 m ... 20 m
Great scanning range	9 m ... 90 m
Protective field height	1,050 mm
Length of the monitored area	1,050 mm
Response time	17 ms
Synchronization	Optical synchronisation

Safety-related parameters

Type	Type 4 (IEC 61496-1)
Safety integrity level	SIL 3 (IEC 61508)
Category	Category 4 (EN ISO 13849)
Performance level	PL e (EN ISO 13849)
T_M (mission time)	20 years (EN ISO 13849)
Safe state in the event of a fault	At least one OSSD is in the OFF state.

Functions

	Functions	Delivery status
Restart interlock	✓	
External device monitoring (EDM)	✓	
Beam coding	✓	Uncoded
Configurable status output (ADO)	✓	Contamination (OWS)
Sender test	✓	Deactivated
Configurable scanning range	✓	Low scanning range

Safe SICK device communication via EFI	✓

Interfaces

System connection	
Connection type	Hirschmann male connector M26, 12-pin
Configuration method	PC with CDS (Configuration and Diagnostic Software)
Configuration connection	Female connector M8, 4-pin
Display elements	7-segment display, LEDs
Status display	LEDs

Electrical data

Protection class	III (IEC 61140)
Supply voltage V_S	24 V DC (19.2 V DC ... 28.8 V DC)
Residual ripple	≤ 10 % [1]
Power consumption	≤ 0.2 A

[1] Within the limits of V_S.

Mechanical data

Housing cross-section	52 mm x 55.5 mm
Housing material	Aluminum alloy ALMGSI 0.5
Surface treatment	Powder coated
Front screen material	Polycarbonate, scratch-resistant coating

Ambient data

Enclosure rating	IP65 (EN 60529)
Ambient operating temperature	–30 °C ... +55 °C
Storage temperature	–30 °C ... +70 °C
Air humidity	15 % ... 95 %, Non-condensing
Vibration resistance	5 g, 10 Hz ... 55 Hz (IEC 60068-2-6)
Shock resistance	10 g, 16 ms (EN 60068-2-29)

Other information

Wave length	850 nm

Certificates

EU declaration of conformity	✓
UK declaration of conformity	✓
ACMA declaration of conformity	✓
Moroccan declaration of conformity	✓
China-RoHS	✓
ULus approval	✓
cUL approval	✓
EC-Type-Examination approval	✓

Classifications

ECLASS 5.0	27272704

ECLASS 5.1.4	27272704
ECLASS 6.0	27272704
ECLASS 6.2	27272704
ECLASS 7.0	27272704
ECLASS 8.0	27272704
ECLASS 8.1	27272704
ECLASS 9.0	27272704
ECLASS 10.0	27272704
ECLASS 11.0	27272704
ECLASS 12.0	27272704
ETIM 5.0	EC002549
ETIM 6.0	EC002549
ETIM 7.0	EC002549
ETIM 8.0	EC002549
UNSPSC 16.0901	46171620

Dimensional drawing

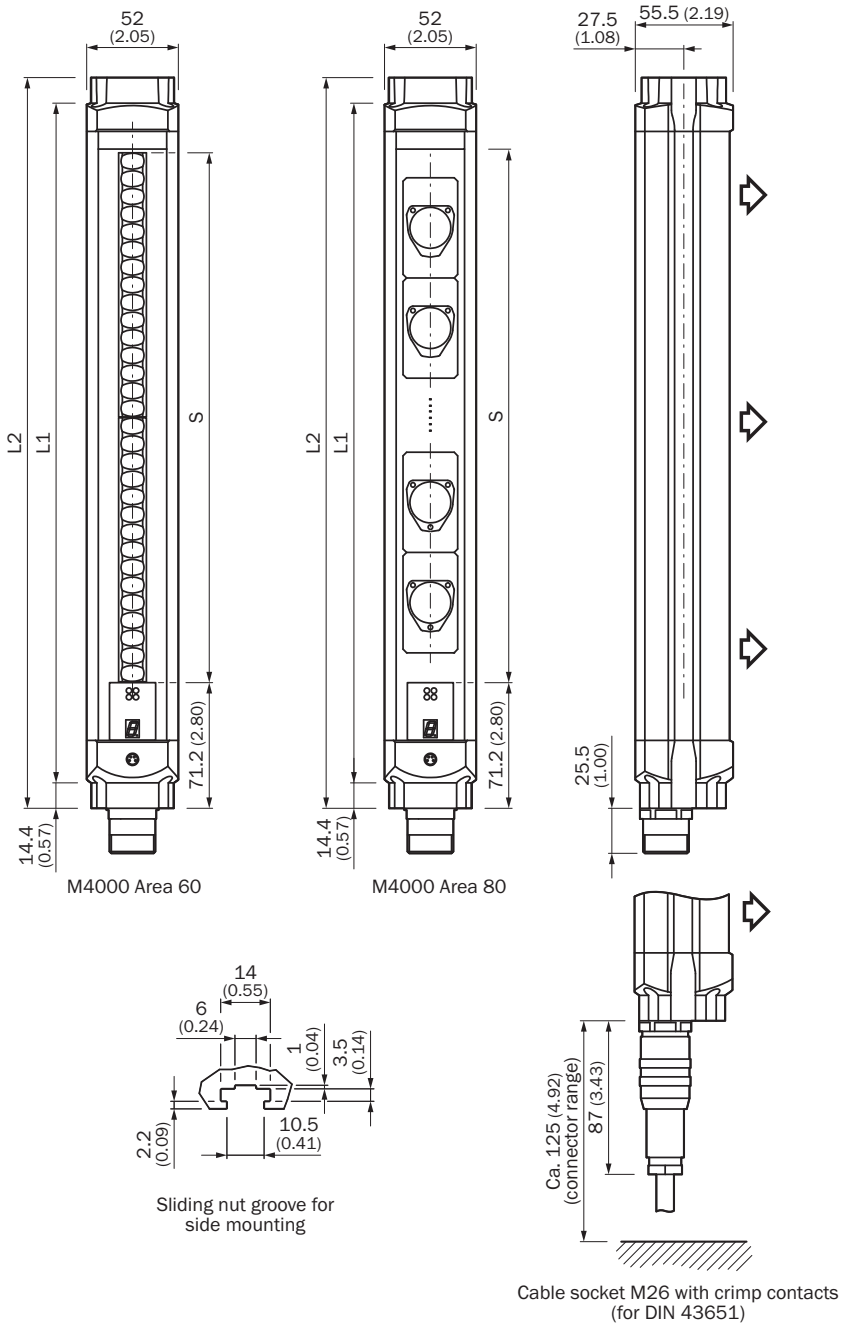

Dimensions in mm (inch)

Length of the monitored area S	L1	L2
300 (11.81)	387 (15.24)	416 (16.38)
450 (17.72)	537 (21.14)	566 (22.28)
600 (23.62)	687 (27.05)	716 (28.19)
750 (29.53)	837 (32.95)	866 (34.09)
900 (35.43)	987 (38.86)	1,016 (40.00)
1,050 (41.34)	1,137 (44.76)	1,166 (45.91)
1,200 (47.24)	1,287 (50.67)	1,316 (51.81)

Length of the monitored area S	L1	L2
1,350 (53.15)	1,437 (56.57)	1,466 (57.72)
1,500 (59.06)	1,587 (62.48)	1,616 (63.62)
1,650 (64.96)	1,737 (68.39)	1,766 (69.53)
1,800 (70.87)	1,887 (74.29)	1,916 (75.43)

Recommended accessories

Other models and accessories ➜ www.sick.com/M4000_Area

	Brief description	Type	part no.
Commissioning aids and test equipment			
	• **Product:** Alignment aids • **Dimensions (W x H x L):** 19 mm 67.3 mm 66.9 mm • **Description:** Laser alignment aid for various sensors, laser class 2 (IEC 60825). Do not look into the beam!	AR60	1015741
	• **Product:** Alignment aids • **Description:** Adapter AR60 for M4000 and M4000 Curtain	AR60 adapter, M4000	4040006
Mounting systems			
	• **Description:** Mounting kit 1, mounting bracket, rigid, L-shaped, including fixing screws and washers • **Packing unit:** 4 pieces • **Suitable for:** All protective field heights	BEF-3WNGBAST4	7021352
	• **Description:** Mounting kit 12, rotatable, swivel mount • **Packing unit:** 4 pieces • **Suitable for:** All protective field heights	BEF-2SMGEAKU4	2030510
	• **Description:** Floor stands for the horizontal mounting of the safety light curtains C4000 Fusion, Entry/Exit, Palletizer, as well as the multi-beam safety light curtain M4000 Area, for mounting heights of between 70 mm and 780 mm. • **Packing unit:** 2 pieces • **Items supplied:** Includes mounting bracket	BEF-3HHOCAST2	2041661
	• **Description:** Mounting kit 6, side bracket, rotatable • **Material:** Zinc diecast • **Details:** Zinc diecast • **Packing unit:** 4 pieces • **Suitable for:** All protective field heights	BEF-1SHABAZN4	2019506

	Brief description	Type	part no.
connectors and cables			
	• **Connection type head A:** Female connector, M26, 12-pin, straight, A-coded • **Description:** Unshielded • **Connection systems:** Crimp contacts • **Permitted cross-section:** 0.5 mm² ... 1.5 mm² • **Note:** 12 crimping contacts enclosed	DOS-0612G000GA3KM(	6020757
	• **Connection type head A:** Female connector, M26, 12-pin, angled, A-coded • **Description:** Unshielded • **Connection systems:** Crimp contacts • **Permitted cross-section:** 0.5 mm² ... 1.5 mm² • **Note:** 12 crimping contacts enclosed	DOS-0612W000GA3KM(	6020758
	• **Connection type head A:** Female connector, M26, 12-pin, straight • **Connection type head B:** Flying leads • **Signal type:** Sensor/actuator cable • **Cable:** 20 m, 12-wire, PVC • **Description:** Sensor/actuator cable, unshielded • **Connection systems:** Flying leads	DOL-0612G20M075KM(	2022549
	• **Connection type head A:** Female connector, M26, 12-pin, straight • **Connection type head B:** Flying leads • **Signal type:** Sensor/actuator cable • **Cable:** 10 m, 12-wire, PVC • **Description:** Sensor/actuator cable, unshielded • **Connection systems:** Flying leads	DOL-0612G10M075KM(	2022547
	• **Connection type head A:** Female connector, M26, 12-pin, straight • **Connection type head B:** Flying leads • **Signal type:** Sensor/actuator cable • **Cable:** 5 m, 12-wire, PVC • **Description:** Sensor/actuator cable, unshielded • **Connection systems:** Flying leads	DOL-0612G05M075KM(	2022545

SICK AT A GLANCE

SICK is one of the leading manufacturers of intelligent sensors and sensor solutions for industrial applications. A unique range of products and services creates the perfect basis for controlling processes securely and efficiently, protecting individuals from accidents and preventing damage to the environment.

We have extensive experience in a wide range of industries and understand their processes and requirements. With intelligent sensors, we can deliver exactly what our customers need. In application centers in Europe, Asia and North America, system solutions are tested and optimized in accordance with customer specifications. All this makes us a reliable supplier and development partner.

Comprehensive services complete our offering: SICK LifeTime Services provide support throughout the machine life cycle and ensure safety and productivity.

For us, that is “Sensor Intelligence.”

WORLDWIDE PRESENCE:

Contacts and other locations –www.sick.com