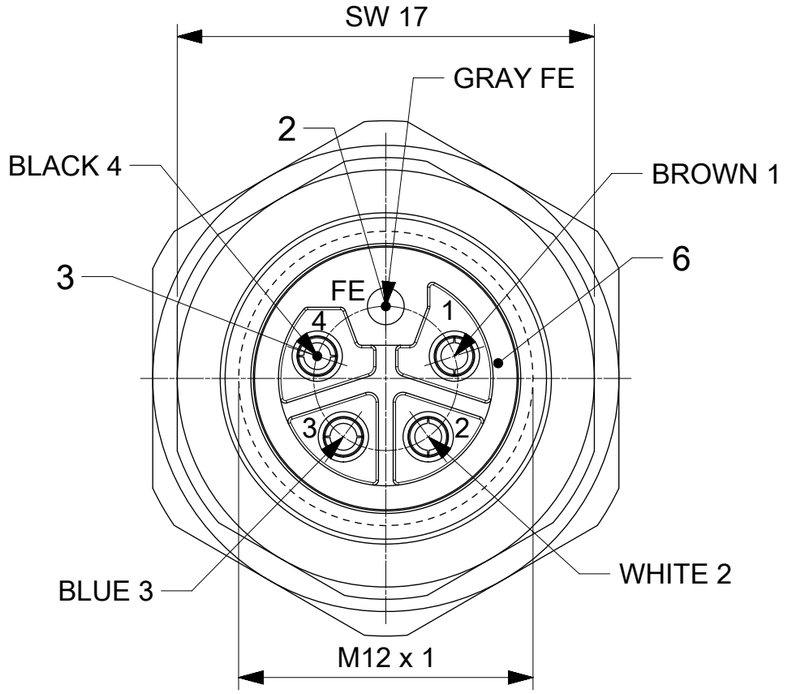

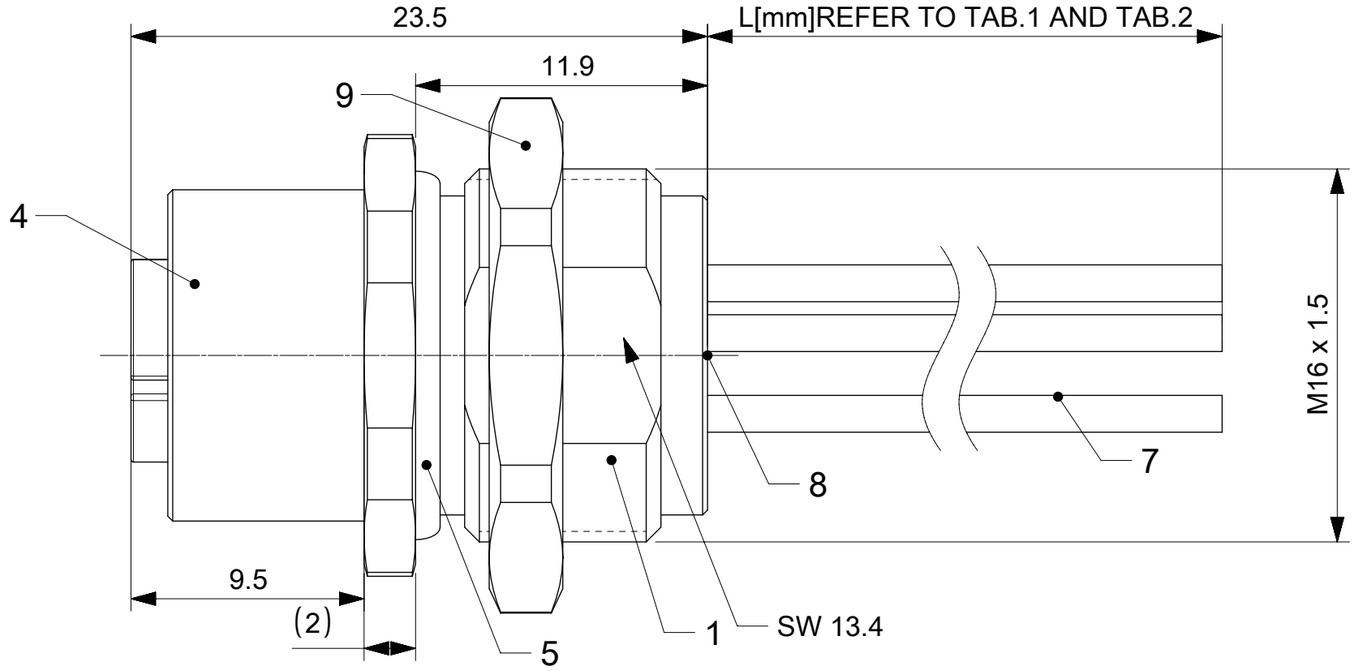

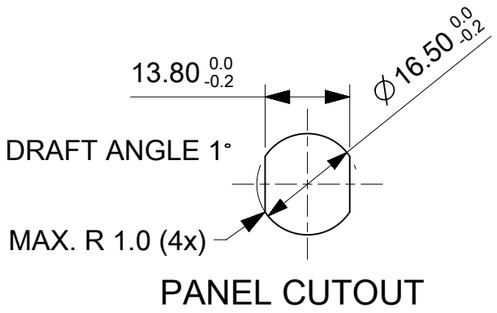

PANEL CUTOUT

TABLE 1: CABLE LENGTH					
NOMINAL SECTION 1,5mm²					
MATERIAL NO.	ENG. NO.	DESCRIPTION	L [mm]	TOL. [mm]	RATED CUR. [A]
1205020014	LRP5U24L15M005	REC M12 5P LC FE M16 FM 0.5M WIR 1.5	500	+40	12
1205020015	LRP5U24L15M002	REC M12 5P LC FE M16 FM 0.2M WIR 1.5	200	+40	12
1205020040	LRP5U24L15M010	REC M12 5P LC FE M16 FM 1.0M WIR 1.5	1000	+40	12
1205020041	LRP5U24L15M020	REC M12 5P LC FE M16 FM 2.0M WIR 1.5	2000	+60	12
1205020054	LRP5U24L15M030	REC M12 5P LC FE M16 FM 3.0M WIR 1.5	3000	+60	12
1205020055	LRP5U24L15M040	REC M12 5P LC FE M16 FM 4.0M WIR 1.5	4000	+60	12
1205020056	LRP5U24L15M050	REC M12 5P LC FE M16 FM 5.0M WIR 1.5	5000	+60	12

TABLE 2: CABLE LENGTH					
NOMINAL SECTION 2,5mm²					
MATERIAL NO.	ENG. NO.	DESCRIPTION	L [mm]	TOL. [mm]	RATED CUR. [A]
1205020024	LRP5U24L25M005	REC M12 5P LC FE M16 FM 0.5M WIR 2.5	500	+40	16
1205020025	LRP5U24L25M002	REC M12 5P LC FE M16 FM 0.2M WIR 2.5	200	+40	16
1205020044	LRP5U24L25M010	REC M12 5P LC FE M16 FM 1.0M WIR 2.5	1000	+40	16
1205020045	LRP5U24L25M020	REC M12 5P LC FE M16 FM 2.0M WIR 2.5	2000	+60	16
1205020063	LRP5U24L25M030	REC M12 5P LC FE M16 FM 3.0M WIR 2.5	3000	+60	16
1205020064	LRP5U24L25M040	REC M12 5P LC FE M16 FM 4.0M WIR 2.5	4000	+60	16
1205020065	LRP5U24L25M050	REC M12 5P LC FE M16 FM 5.0M WIR 2.5	5000	+60	16

TECHNICAL DATA:

CONTACT ∅:	1.5mm
RATED VOLTAGE:	63V AC/DC
RATED CURRENT:	SEE TAB.1 / TAB.2
OVERVOLTAGE CATEGORIE:	3
POLLUTION DEGREE:	3
DIELECTRIC STRENGTH:	1500V
CONTACT RESITANCE:	≤ 5mΩ
INSULATION RESISTANCE:	MIN: 10^8 Ω
IP RATING:	IP67 (connected condition)
TEMPERATURE RANGE:	-25°C bis +85°C

PACKAGING:
THE RECEPTACLE ARE PACKED IN PLASTIC BAGS
AND DELIVERED IN CARTON BOXES

TABLE 3: BOM			
POS	DESCRIPTION	MATERIAL	FINISH
1	SHELL M16FE	BRASS	Ni
2	CONTACT 15 MA	BRASS	Au
3	CONTACT 15 FE	BRASS	Au
4	INSERT	PA	GREY
5	O-RING	NBR	BLACK
6	O-RING	FPM	BLACK
7	WIRE 16AWG / 14AWG	PVC	-
8	POTTING MATERIAL	RESIN	NATURAL
9	HEX NUT	BRASS	Ni

FUNCTIONAL SYMBOLS: FA = 0; FC = 0; FB = 0
DIVISIONAL SYMBOLS

THIS DRAWING CONTAINS INFORMATION THAT IS PROPRIETARY TO MOLEX ELECTRONIC TECHNOLOGIES, LLC AND SHOULD NOT BE USED WITHOUT WRITTEN PERMISSION

DIMENSION UNITS: mm | SCALE: 4:1
GENERAL TOLERANCES (UNLESS SPECIFIED)
ANGULAR TOL ± 1.0°
4 PLACES ±
3 PLACES ±
2 PLACES ± 0.05
1 PLACE ± 0.3
0 PLACES ± 0.5
DRAFT WHERE APPLICABLE MUST REMAIN WITHIN DIMENSIONS

CURRENT REV DESC: NEW P/N´S ADDED
EC NO: 776660
DRWN: RSCHIEBER 2024/02/08
CHK'D: RSILLER 2024/02/09
APPR: RSILLER 2024/02/09
INITIAL REVISION:
DRWN: SMORADICHARG 2016/07/25
APPR: RSILLER 2022/05/04

THIRD ANGLE PROJECTION | DRAWING: A3-SIZE | SERIES: 120502

molex

REC M12 5P LC FE M16 FM XM WIR

PRODUCT CUSTOMER DRAWING

DOCUMENT NUMBER	DOC TYPE	DOC PART	REVISION
1205020014	PSD	000	A4

MATERIAL NUMBER	CUSTOMER	SHEET NUMBER
SEE TABLE	GENERAL MARKET	1 OF 1

DOCUMENT STATUS	P1	RELEASE DATE	2024/02/09 14:24:24

FORMAT: molex_A-size_A3
REVISION: J
DATE: 2020/01/14