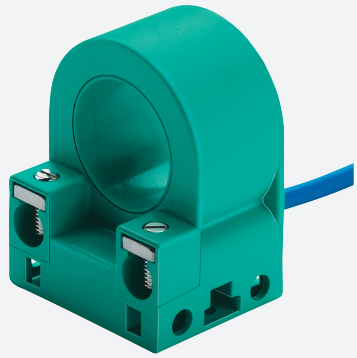

Inductive ring sensor

RJ15-14-N-5M

- 15 mm inside diameter

Dimensions

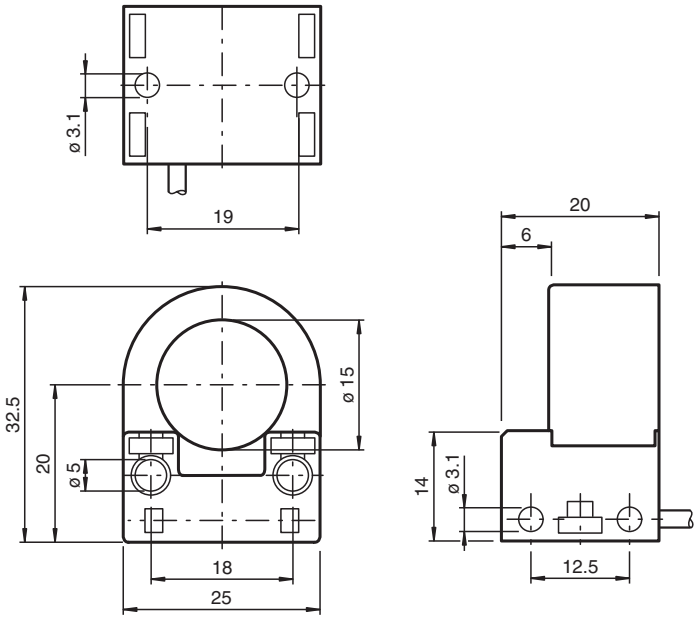

Technical Data

General specifications		
Switching function		Normally closed (NC)
Output type		NAMUR
Inside diameter		15 mm
Measuring cylinder		9S20K
Diameter		3 mm
Length		4 mm
Output type		2-wire
Nominal ratings		
Nominal voltage	U_o	8.2 V (R_i approx. 1 kΩ)
Operating voltage	U_B	5 ... 25 V
Switching frequency	f	0 ... 1500 Hz
Current consumption		

Release date: 2025-07-14 Date of issue: 2025-07-14 Filename: 120803_eng.pdf

Technical Data

Measuring plate not detected		≥ 3 mA at nominal voltage
Measuring plate detected		≤ 1 mA at nominal voltage
Compliance with standards and directives		
Standard conformity		
NAMUR		EN 60947-5-6:2000 IEC 60947-5-6:1999
Standards		EN IEC 60947-5-2
Approvals and certificates		
ATEX approval		
Equipment protection level Gb		PTB 99 ATEX 2128 X
UL approval		cULus Listed Load Type: General Purpose Circuitry: Class 2 Power Source Enclosure Type Rating: Type 1 Supply/Switching Voltage: 8.2 V DC
Ambient conditions		
Ambient temperature		-25 ... 70 °C (-13 ... 158 °F)
Mechanical specifications		
Connection type		cable
Housing material		PBT
Degree of protection		IP67
Cable		
Wire end ferrules		yes
Cable diameter		2.6 mm ± 0.2 mm
Bending radius		> 10 x cable diameter
Material		PVC
Color		blue
Number of cores		2
Core cross section		0.14 mm^2
Length	L	5 m
Dimensions		
Height		32.5 mm
Width		25 mm
Length		20 mm
General information		
Use in the hazardous area		see instruction manuals

Connection Assignment

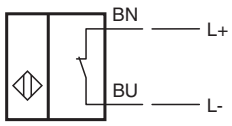

Release date: 2025-07-14 Date of issue: 2025-07-14 Filename: 120803_eng.pdf