Product data sheet

Specifications



soft starter for asynchronous motor, Altistart U01, TeSys U, ATSU01, 22A, 200 to 480V, 4 to 11kW

ATSU01N222LT

Main

Range of product	Altistart U01 and TeSys U
product or component type	Soft starter
product destination	Asynchronous motors
Product specific application	Simple machine
Device short name	ATSU01
Network number of phases	3 phases
[Us] rated supply voltage	200...480 V - 10...10 %
Motor power kW	11 kW, 3 phases at 400 V 4 kW, 3 phases at 230 V 7.5 kW, 3 phases at 400 V 5.5 kW, 3 phases at 230 V
Motor power hp	5 hp, 3 phases at 230 V 7.5 hp, 3 phases at 230 V 10 hp, 3 phases at 460 V 15 hp, 3 phases at 460 V
IcL starter rating	22 A
Utilisation category	AC-53B conforming to EN/IEC 60947-4-2
Current consumption	100 mA
Type of start	Start with voltage ramp
Power dissipation in W	2.5 W at full load and at end of starting 222.5 W in transient state

Complementary

Assembly style	With heat sink
Function available	Integrated bypass
Supply voltage limits	180…528 V
Supply frequency	50...60 Hz - 5...5 %
Network frequency	47.5...63 Hz
Output voltage	<= power supply voltage
[Uc] control circuit voltage	24 V DC +/- 10 %
Starting time	1 s / 100 5 s / 20 10 s / 10 Adjustable from 1 to 10 s
Deceleration time symb	Adjustable from 1 to 10 s
Starting torque	30...80 % of starting torque of motor connected directly on the line supply

Disclaimer: This documentation is not intended as a substitute for and is not to be used for determining suitability or reliability of these products for specific user applications

Discrete input type	Logic (LI1, LI2, BOOST) stop, run and boost on start-up functions <= 8 mA 27 kOhm
Discrete input voltage	24...40 V
Input output isolation	Galvanic between power and control
Discrete input logic	Positive LI1, LI2, BOOST at State 0: < 5 V and <= 0.2 mA at State 1: > 13 V, >= 0.5 mA
Discrete output current	2 A DC-13 3 A AC-15
Discrete output type	Open collector logic LO1 end of starting signal Relay outputs R1A, R1C NO
Discrete output voltage	24 V (voltage limits: 6...30 V) open collector logic
Minimum switching current	10 mA at 6 V DC for relay outputs
Maximum switching current	Relay outputs: 2 A at 30 V DC cos phi = 0.5 and L/R = 20 ms inductive load Relay outputs: 2 A at 250 V AC AC-15 cos phi = 0.5 and L/R = 20 ms inductive load
Maximum switching voltage	440 V relay outputs
Display type	1 LED (green) for starter powered up 1 LED (yellow) for nominal voltage reached
Tightening torque	1.9…2.5 N.m 0.5 N.m
Electrical connection	4 mm screw clamp terminal - rigid 1 1...10 mm² AWG 8 power circuit Screw connector - rigid without cable end 1 0.5...2.5 mm² AWG 14 control circuit 4 mm screw clamp terminal - rigid 2 1...6 mm² AWG 10 power circuit Screw connector - rigid 2 0.5...1 mm² AWG 17 control circuit Screw connector - flexible with cable end 1 0.5...1.5 mm² AWG 16 control circuit 4 mm screw clamp terminal - flexible without cable end 1 1.5...10 mm² AWG 8 power circuit Screw connector - flexible without cable end 1 0.5...2.5 mm² AWG 14 control circuit 4 mm screw clamp terminal - flexible with cable end 2 1...6 mm² AWG 10 power circuit 4 mm screw clamp terminal - flexible without cable end 2 1.5...6 mm² AWG 10 power circuit Screw connector - flexible without cable end 2 0.5...1.5 mm² AWG 16 control circuit
marking	CE
Operating position	Vertical +/- 10 degree
Height	314 mm
Width	45 mm
Depth	170 mm
net weight	0.49 kg
Motor power range AC-3	4…6 kW at 200…240 V 3 phases 7…11 kW at 380…440 V 3 phases
Motor starter type	Soft starter

Environment

Electromagnetic compatibility	Conducted and radiated emissions level B conforming to CISPR 11 Conducted and radiated emissions level B conforming to IEC 60947-4-2 Damped oscillating waves level 3 conforming to IEC 61000-4-12 Electrostatic discharge level 3 conforming to IEC 61000-4-2 EMC immunity conforming to EN 50082-1 EMC immunity level B conforming to EN 50082-2 Harmonics level 3 conforming to IEC 1000-3-2 Harmonics level 3 conforming to IEC 1000-3-4 Immunity to electrical transients level 4 conforming to IEC 61000-4-4 Immunity to radiated radio-electrical interference level 3 conforming to IEC 61000-4-3 Voltage/current impulse level 3 conforming to IEC 61000-4-5 Conducted and radiated emissions level 3 conforming to IEC 61000-4-6 Immunity to conducted interference caused by radio-electrical fields level 4 conforming to IEC 61000-4-11
Standards	EN/IEC 60947-4-2

Product certifications	C-Tick CSA UL CCC
IP degree of protection	IP20
Pollution degree	2 conforming to EN/IEC 60947-4-2
Vibration resistance	1 gn (f= 13…150 Hz) conforming to EN/IEC 60068-2-6 1.5 mm peak to peak (f= 3…13 Hz) conforming to EN/IEC 60068-2-6
Shock resistance	15 gn for 11 ms conforming to EN/IEC 60068-2-27
Relative humidity	5…95 % without condensation or dripping water conforming to EN/IEC 60068-2-3
Ambient air temperature for operation	-10…40 °C (without derating) 40…50 °C (with current derating of 2 % per °C)
Ambient air temperature for storage	-25…70 °C conforming to EN/IEC 60947-4-2
Operating altitude	<= 1000 m without derating > 1000 m with current derating of 2.2 % per additional 100 m

Packing Units

Unit Type of Package 1	PCE
Number of Units in Package 1	1
Package 1 Height	5.000 cm
Package 1 Width	15.000 cm
Package 1 Length	17.200 cm
Package 1 Weight	554.000 g
Unit Type of Package 2	S03
Number of Units in Package 2	14
Package 2 Height	30.000 cm
Package 2 Width	30.000 cm
Package 2 Length	40.000 cm
Package 2 Weight	8.405 kg
Unit Type of Package 3	P06
Number of Units in Package 3	112
Package 3 Height	75.000 cm
Package 3 Width	60.000 cm
Package 3 Length	80.000 cm
Package 3 Weight	77.036 kg

Contractual warranty

Warranty	18 months

Sustainability

Green Premium™ label is Schneider Electric's commitment to delivering products with best-in-class environmental performance. Green Premium promises compliance with the latest regulations, transparency on environmental impacts, as well as circular and low-CO_2 products.

Guide to assessing product sustainability is a white paper that clarifies global eco-label standards and how to interpret environmental declarations.

Learn more about Green Premium >

Guide to assess a product's sustainability >

Well-being performance

Reach Free Of Svhc	
Toxic Heavy Metal Free	
Mercury Free	
Rohs Exemption Information	Yes

Reach Regulation	REACh Declaration
Eu Rohs Directive	Pro-active compliance (Product out of EU RoHS legal scope) EU RoHS Declaration
China Rohs Regulation	China RoHS declaration
Weee	The product must be disposed on European Union markets following specific waste collection and never end up in rubbish bins
California Proposition 65	WARNING: This product can expose you to chemicals including: Lead and lead compounds, which is known to the State of California to cause cancer and birth defects or other reproductive harm. For more information go to www.P65Warnings.ca.gov

Dimensions Drawings

Dimensions

With TeSys U Combination (Non Reversing Power Base)

Mounting on symetrical (35 mm) rail with power connector between ATS and TeSys U.

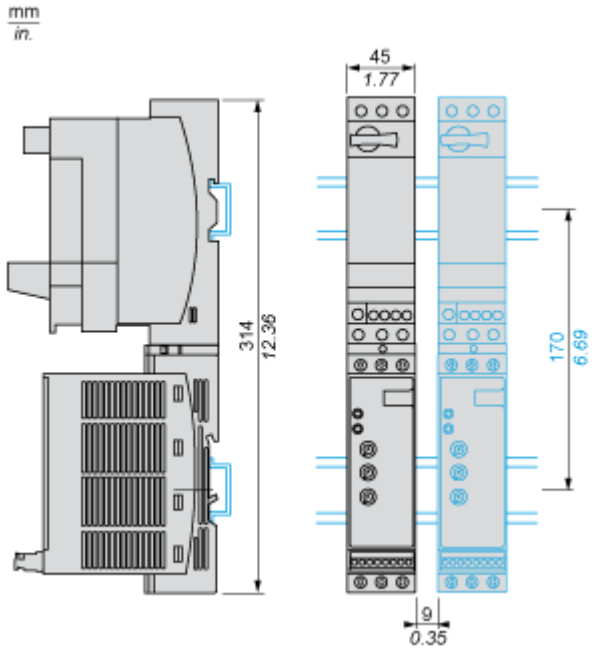

With TeSys U Combination (Non Reversing or Reversing Power Base)

Side by side mounting

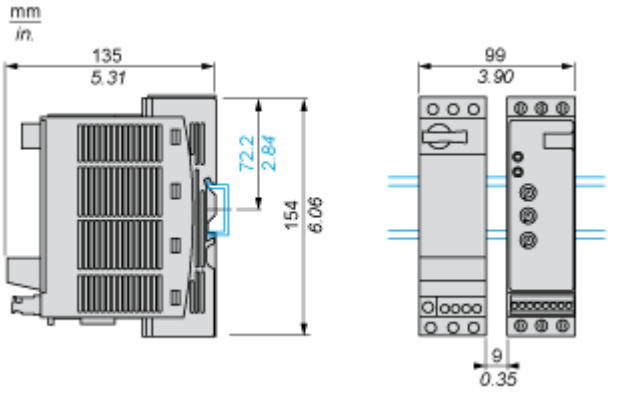

Connections and Schema

Power Wiring

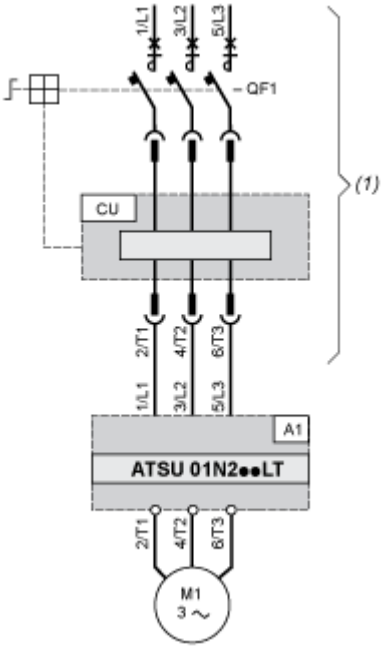

(1) TeSys U

A1 : Soft start/soft stop unit

QF1 : TeSys U controller-starter

CU : TeSys U control unit

With Reversing Unit

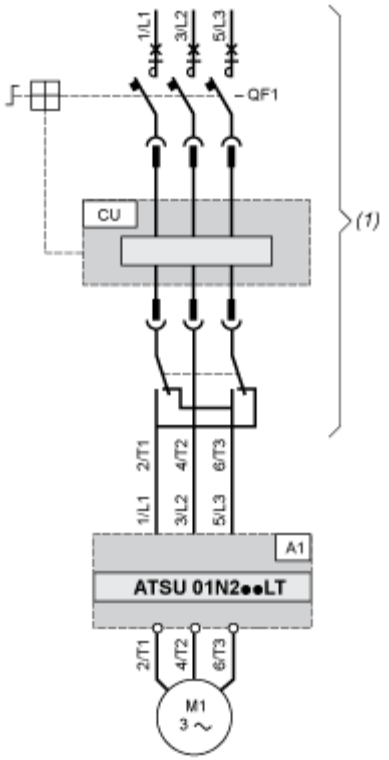

(1) TeSys U with reversing unit

A1 : Soft start/soft stop unit

QF1 : TeSys U controller-starter

CU : TeSys U control unit

Control Wiring

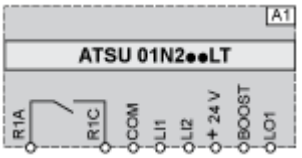

A1 : Soft start/soft stop unit

R1A, R1C : Relay output NO

COM : Commun

LI1, LI2 : Logic inputs (stop and run functions)

BOOST : Logic input (boost on start-up function)

LO1 : Logic output

Technical Description

Functional Diagram Automatic 2-wire Control

Without Deceleration

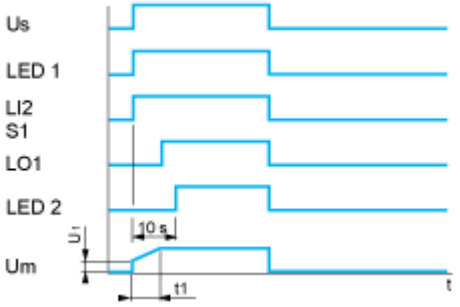

Us : Power supply voltage

LED 1 : Green LED

LI2 : Logic input

S1 : Pushbutton

LED 2 : Yellow LED

Um : Motor voltage

t1 : Acceleration time can be controlled by a potentiometer

U1 : Starting time can be controlled by a potentiometer

With and without Deceleration

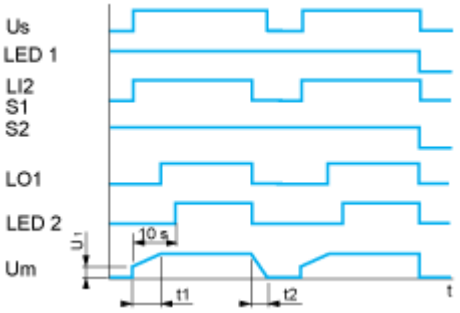

Us : Power supply voltage

LED 1 : Green LED

LI2 : Logic input

S1, S2 : Pushbuttons

LO1 : Logic output

LED 2 : Yellow LED

Um : Motor voltage

t1 : Acceleration time can be controlled by a potentiometer

t2 : Deceleration time can be controlled by a potentiometer

U1 : Starting time can be controlled by a potentiometer

Functional Diagram Automatic 3-wire Control

Without Deceleration

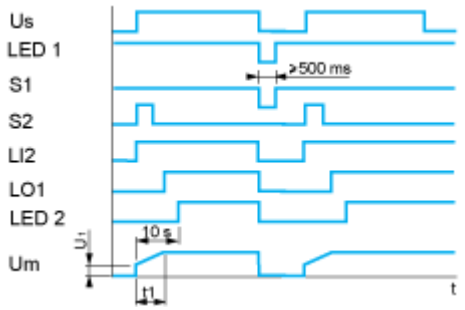

Us : Power supply voltage

LED 1 : Green LED

S1, S2 : Pushbuttons

LI2 : Logic input

LO1 : Logic output

LED 2 : Yellow LED

Um : Motor voltage

t1 : Acceleration time can be controlled by a potentiometer

U1 : Starting time can be controlled by a potentiometer

With Deceleration

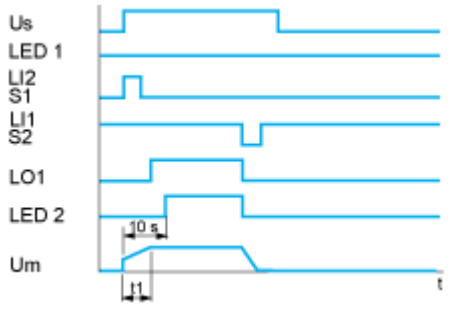

Us : Power supply voltage

LED 1 : Green LED

S1, S2 : Pushbuttons

LI1, LI2 : Logic inputs

LO1 : Logic output

LED 2 : Yellow LED

Um : Motor voltage

t1 : Acceleration time can be controlled by a potentiometer