# TCP 32DC/15A M - Thermal device circuit breaker

1499968

https://www.phoenixcontact.com/us/products/1499968

Please be informed that the data shown in this PDF document is generated from our online catalog. Please find the complete data in the user documentation. Our general terms of use for downloads are valid.



1-channel thermal device circuit breaker for protecting loads up to 32 V DC in the event of an overload. Fuse type: slow-blow. Can be plugged onto fuse terminal blocks and interfaces for flat plug-in fuse of type C according to standard ISO 8820-3. With fixed nominal current: 15 A

## Your advantages

- Fast, replacement part-free recommissioning after an event with the reconnection options
- Easy to retrofit in existing systems with vehicle flat-type fuses with identical pin connector pattern
- Easy identification of the nominal current value via color marking

## Commercial data

| | |
|---|---|
| Item number | 1499968 |
| Packing unit | 100 pc |
| Minimum order quantity | 100 pc |
| Sales key | CL27 |
| Product key | CLA112 |
| GTIN | 4063151955687 |
| Weight per piece (including packing) | 4.68 g |
| Weight per piece (excluding packing) | 4.689 g |
| Customs tariff number | 85362010 |
| Country of origin | CN |

## Technical data

### Product properties

| | |
|---|---|
| Product type | Thermal device circuit breakers |
| Type | Male |
| Number of positions | 1 |
| No. of channels | 1 |

Insulation characteristics

| | |
|---|---|
| Protection class | III |

### Electrical properties

| | |
|---|---|
| Fuse | thermal |

General

| | |
|---|---|
| Rated voltage | max. 32 V DC |
| Rated current $I_N$ | 15 A |
| Required backup fuse | Only required if $I_{max}$ of the power supply > the short-circuit switching capacity. |
| Rated short-circuit switching capacity $I_{cn}$ | 150 A (≥3 shutdowns) |
| Short-circuit switching capacity | 150 A (≥3 shutdowns) |
| | 2000 A (≥ 1 switch-off) |
| Fuse | thermal |
| Voltage drop | < 150 mV |
| Contact switching type | Type C in accordance with ISO 8820-3 |

### Connection data

| | |
|---|---|
| Connection method | pluggable |

### Dimensions

| | |
|---|---|
| Dimensional drawing | 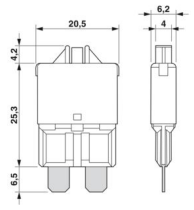  |
| Width | 6.2 mm |
| Height | 19.7 mm |
| Depth | 29.5 mm |

### Material specifications

| | |
|---|---|
| Color | light blue (RAL 5012) |
| Material | CuSn |
| Flammability rating according to UL 94 | V-0 |

| | |
|---|---|
| Insulating material | PA 6 |
| Housing material | PA 6 |

## Mechanical properties

Mechanical data

| | |
|---|---|
| Open side panel | No |

## Environmental and real-life conditions

Ambient conditions

| | |
|---|---|
| Degree of protection | IP30 (Actuation area) |
| Ambient temperature (operation) | -40 °C ... 85 °C |
| Ambient temperature (storage/transport) | -40 °C ... 125 °C |

## Mounting

| | |
|---|---|
| Mounting type | on base element |

## Drawings

Dimensional drawing

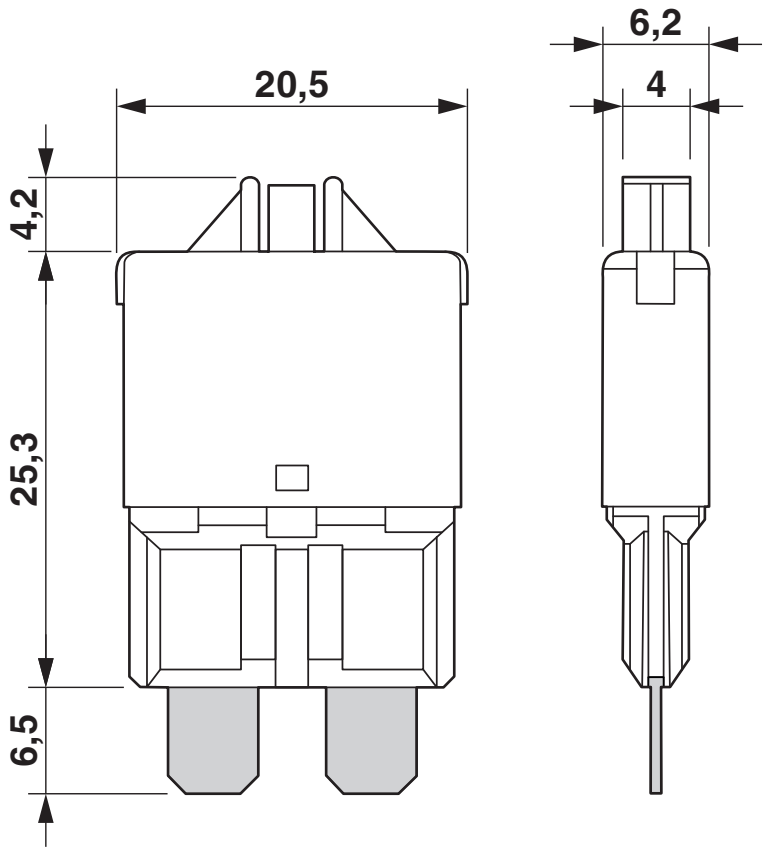

Diagram

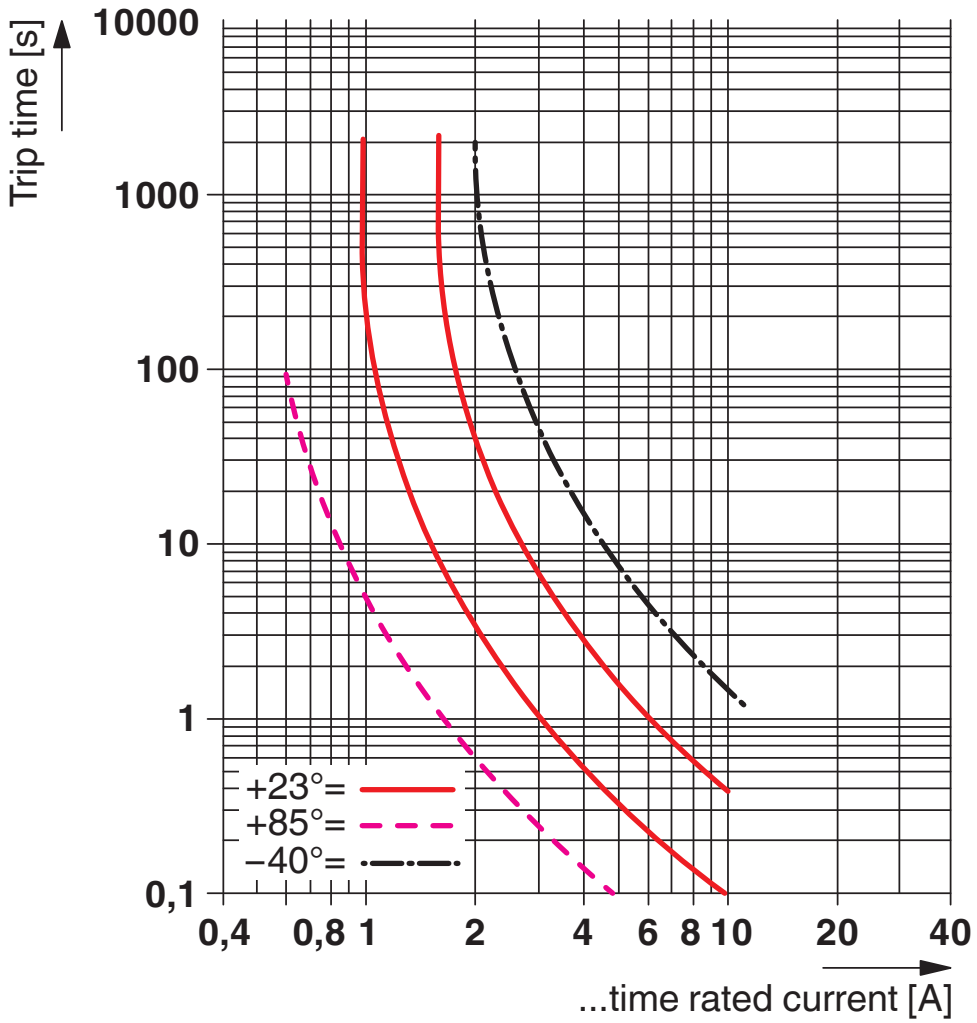


Trigger characteristic

## Classifications

### ECLASS

| | |
|---|---|
| ECLASS-13.0 | 27140401 |
| ECLASS-15.0 | 27140401 |

### ETIM

| | |
|---|---|
| ETIM 9.0 | EC003538 |

## Accessories

### ST 4-FSI/C - Fuse modular terminal block

3036372

https://www.phoenixcontact.com/us/products/3036372



Fuse modular terminal block, fuse type: Blade, fuse type: C, nom. voltage: 400 V, nominal current: 30 A, connection method: Spring-cage connection, 1 level, Rated cross section: 4 $mm^2$, cross section: 0.08 $mm^2$- 6 $mm^2$, mounting type: NS 35/7,5, NS 35/15, color: black

### ST 4-FSI/C-LED 12 - Fuse modular terminal block

3036495

https://www.phoenixcontact.com/us/products/3036495




Fuse terminal block with LED for mounting on NS 35, for miniature circuit breakers, terminal width: 8.2 mm, color: Black

## ST 4-FSI/C-LED 24 - Fuse modular terminal block

3036505

https://www.phoenixcontact.com/us/products/3036505



Fuse terminal block with LED for mounting on NS 35, for miniature circuit breakers, terminal width: 8.2 mm, color: Black

## UK 6-FSI/C - Fuse modular terminal block

3118203

https://www.phoenixcontact.com/us/products/3118203

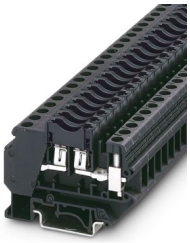

Fuse modular terminal block, fuse type: Blade, fuse type: C, nom. voltage: 250 V, nominal current: 30 A, number of positions: 1, connection method: Screw connection, 1 level, Rated cross section: 4 $mm^2$, cross section: 0.2 $mm^2$ - 10 $mm^2$, mounting type: NS 35/7,5, NS 35/15, NS 32, color: black

## UK 6-FSI/C-LED12 - Fuse modular terminal block

3001925

https://www.phoenixcontact.com/us/products/3001925



Fuse modular terminal block, fuse type: Blade, fuse type: C, nom. voltage: 12 V, nominal current: 30 A, number of positions: 1, connection method: Screw connection, 1 level, Rated cross section: 4 $mm^2$, cross section: 0.2 $mm^2$ - 10 $mm^2$, mounting type: NS 35/7,5, NS 35/15, NS 32, color: black

## UK 6-FSI/C-LED24 - Fuse modular terminal block

3001938

https://www.phoenixcontact.com/us/products/3001938



Fuse modular terminal block, fuse type: Blade, fuse type: C, nom. voltage: 24 V, nominal current: 30 A, number of positions: 1, connection method: Screw connection, 1 level, Rated cross section: 4 $mm^2$, cross section: 0.2 $mm^2$ - 10 $mm^2$, mounting type: NS 35/7,5, NS 35/15, NS 32, color: black

## PT 6-FSI/C - Fuse modular terminal block

3212166

https://www.phoenixcontact.com/us/products/3212166



Fuse modular terminal block, fuse type: Blade, fuse type: Type C / max. 2.2 W, nom. voltage: 400 V, nominal current: 25 A, connection method: Push-in connection, Rated cross section: 6 $mm^2$, cross section: 0.5 $mm^2$ - 10 $mm^2$, mounting type: NS 35/7,5, NS 35/15, color: black

## PT 6-FSI/C-LED 12 - Fuse modular terminal block

3212169

https://www.phoenixcontact.com/us/products/3212169



Fuse modular terminal block, fuse type: Blade, fuse type: Type C / max. 2.2 W, nom. voltage: 12 V, nominal current: 25 A, connection method: Push-in connection, Rated cross section: 6 $mm^2$, cross section: 0.5 $mm^2$ - 10 $mm^2$, mounting type: NS 35/7,5, NS 35/15, color: black

# TCP 32DC/15A M - Thermal device circuit breaker

1499968

https://www.phoenixcontact.com/us/products/1499968

## PT 6-FSI/C-LED 24 - Fuse modular terminal block

3212172

https://www.phoenixcontact.com/us/products/3212172



Fuse modular terminal block, fuse type: Blade, fuse type: Type C / max. 2.2 W, nom. voltage: 24 V, nominal current: 25 A, connection method: Push-in connection, Rated cross section: 6 $mm^2$, cross section: 0.5 $mm^2$ - 10 $mm^2$, mounting type: NS 35/7,5, NS 35/15, color: black

Phoenix Contact 2025 © - all rights reserved
https://www.phoenixcontact.com

Phoenix Contact USA
586 Fulling Mill Road
Middletown, PA 17057, United States
(+717) 944-1300
info@phoenixcon.com