EVQ6527-F-00A

40V, 0.8A Deca Half-Bridge Motor Driver Evaluation Board

DESCRIPTION

The EVQ6527-F-00A is an evaluation board for the MPQ6527, a ten channel Half-Bridge gate driver with serial input control. The input voltage ranges from 5.5V to 40V, with the up to 0.8A output current capability.

The ten half-bridges of MPQ6527 can be controlled separately from a standard serial data interface, and have various diagnostic functions.

MPQ6527 has very low quiescent current in standby mode, and it requires a minimum number of readily available standard external components. The MPQ6527 with AEC-Q100 is available in a TSSOP28-EP package.

ELECTRICAL SPECIFICATION

Parameter	Symbol	Value	Units
Input Voltage	V_{IN}	5.5-40	V
Output Current	Io	0.8	A

FEATURES

- Wide 5.5V to 40V Operating Voltage Range
- Up to 0.8A Output Current
- Rdson (HS+LS) typically 1.3Ω
- Very Low Quiescent Current in Standby Mode Versus Total Temperature Range
- Serial Data Interface
- Daisy Chaining Possible
- Various Diagnostic Functions: Shorted Output, Open-Load, Over-Temperature, Over-Voltage and Under-Voltage.
- Available in a TSSOP28-EP Package
- Available in AEC-Q100 Grade 1

APPLICATIONS

- Motor Drivers
- Telecom Half-Bridge Power Supplies
- Avionics DC/DC converters

All MPS parts are lead-free, halogen-free, and adhere to the RoHS directive. For MPS green status, please visit the MPS website under Quality Assurance. “MPS” and “The Future of Analog IC Technology” are registered trademarks of Monolithic Power Systems, Inc.

EVQ6527-F-00A EVALUATION BOARD

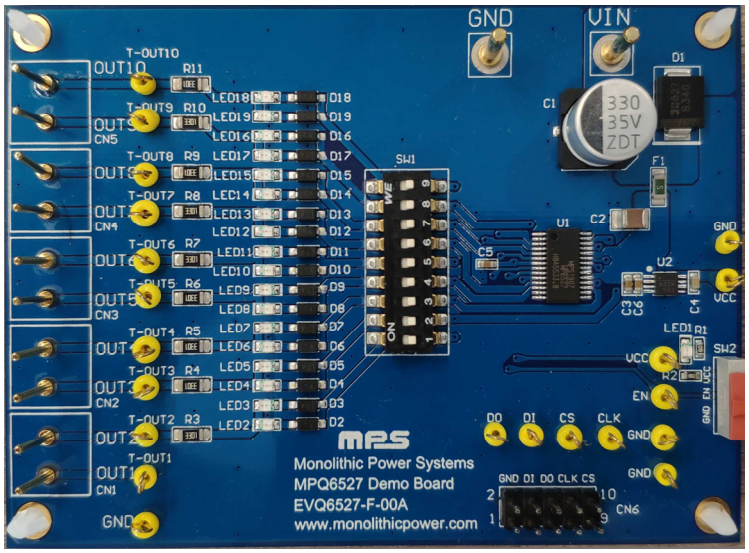

(L × W × H) 9.73cm x 7.16cm x 1cm

Board Number	MPS IC Number
EVQ6527-F-00A	MPQ6527GF

MPS Proprietary Information. Patent Protected. Unauthorized Photocopy and Duplication Prohibited.
© 2019 MPS. All Rights Reserved.

EVALUATION BOARD SCHEMATIC

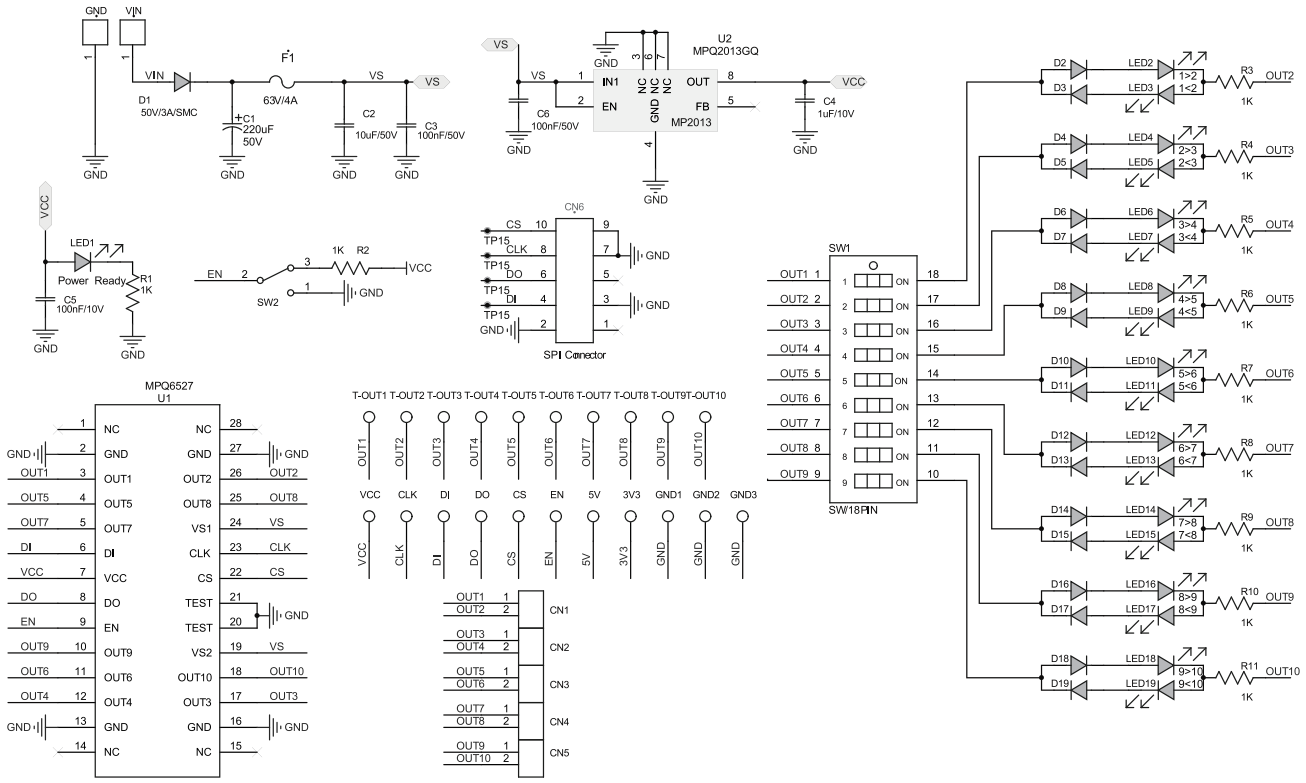

MPS Proprietary Information. Patent Protected. Unauthorized Photocopy and Duplication Prohibited.
© 2019 MPS. All Rights Reserved.

EVQ6527-F-00A BILL OF MATERIALS

Qty	Ref	Value	Description	Package	Manufacturer	Part Number
21	3.3V, CLK, CS, DI, DO, EN, GND1, GND2, GND3, OUT1, OUT2, OUT3, OUT4, OUT5, OUT6, OUT7, OUT8, OUT9, OUT10, VCC, VS1		Test Point			
1	C1	330µF/35V	Electrolytic Capacitor; 35V;SMD	SMD	Panasonic	EEV-TG1J221Q
1	C2	10µF/50V	Ceramic Capacitor; X7R	1210	Murata	GRM32ER71H106KA12L
3	C3, C5, C6	100nF/50V	Ceramic Capacitor;50V; X7R	0603	Murata	GCJ188R71H104KA12D
1	C4	1µF/6.3V	Ceramic Capacitor;6.3V ;X5R	0603	Murata	GRM188R60J475ME19D
10	CN1, CN2, CN3, CN4, CN5		1mm Needle			
1	CN6		2.54mm Connector; Dual Row	DIP		
1	D1	B340	Diode;40V;3A;	SMC	Diodes	B340
18	D2, D3, D4, D5, D6, D7, D8, D9, D10, D11, D12, D13, D14, D15, D16, D17, D18, D19	1N4148W	Diode;75V;0.15A;	SOD-123	Diodes	1N4148W
1	F1	CC12H4A	Fuse;63V;4A;	1206	COOPER	CC12H4A
2	GND,VIN		2mm Needle			
1	LED1		LED;Red;	0805	BRIGHT LED	BL-HUE35A-AV-TRB

MPS Proprietary Information. Patent Protected. Unauthorized Photocopy and Duplication Prohibited.
© 2019 MPS. All Rights Reserved.

EVQ6527-F-00A BILL OF MATERIALS *(continued)*

Qty	Ref	Value	Description	Package	Manufacturer	Part Number
18	LED2, LED3, LED4, LED5, LED6, LED7, LED8, LED9, LED10, LED11, LED12, LED13, LED14, LED15, LED16, LED17, LED18, LED19	BL-HUF35A-TRB	LED;Green;	0805	BRIGHT LED	BL-HGE36A-AV-TRB
2	R1, R2	1k	Film Resistor, 1%	0603	Yageo	RC0603FR-071KL
9	R3, R4, R5, R6, R7, R8, R9, R10, R11	3.3k	Film Resistor;1%	1206	Yageo	RC1206FR-073K3L
1	SW2		Switch			
1	SW1	9-bit	Dial switch	SMD	Wurth	418121270809
1	U2	MPQ2013AGQ-33-Z	3.3 step down regulator	QFN	MPS	MPQ2013AGQ-33-Z
1	U1	MPQ6527	Half-bridge motor driver with serial input control	TSSOP	MPS	MPQ6527GF-R2

MPS Proprietary Information. Patent Protected. Unauthorized Photocopy and Duplication Prohibited.
© 2019 MPS. All Rights Reserved.

PRINTED CIRCUIT BOARD LAYOUT

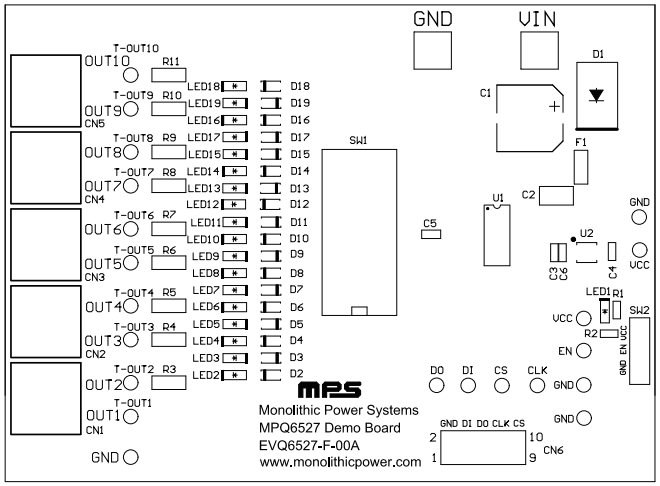

Figure 1: Top Silkscreen Layer

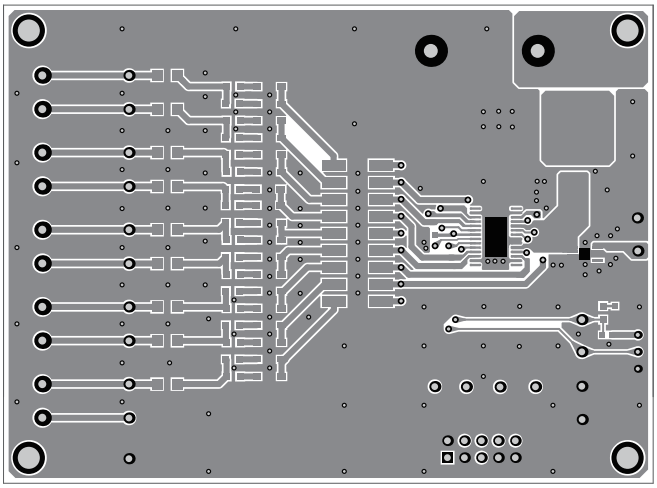

Figure 2: Top Layer

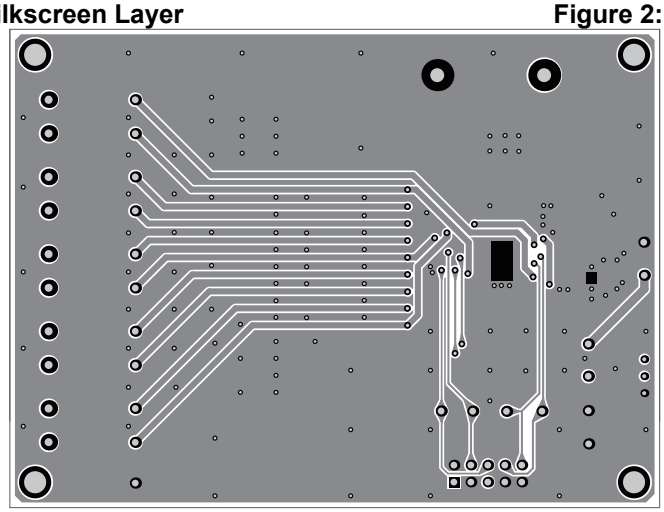

Figure 3: Bottom Silkscreen Layer

MPS Proprietary Information. Patent Protected. Unauthorized Photocopy and Duplication Prohibited.
© 2019 MPS. All Rights Reserved.

QUICK START GUIDE

1. Setup Condition

a. Switch SW2 to the downwards to enable the IC.

b. Apply external SPI signals to the CN6.

c. Connect load to the OUT1 to OUT10.

d. 3.3V VCC power supply is on board.

e. Attach the VIN power supply with recommended operating range (5.5V to 40V) to the VIN and GND terminals respectively.

2. Monitors

a. For the H-bridge applications, rotation direction of DC motors can be observed by LEDs if SW1 switches to ON position.

b. All pins are easy accessible via test points.

GUI OPERATION ILLUSTRATION

The GUI achieves a simple control for the ten channel half-bridge

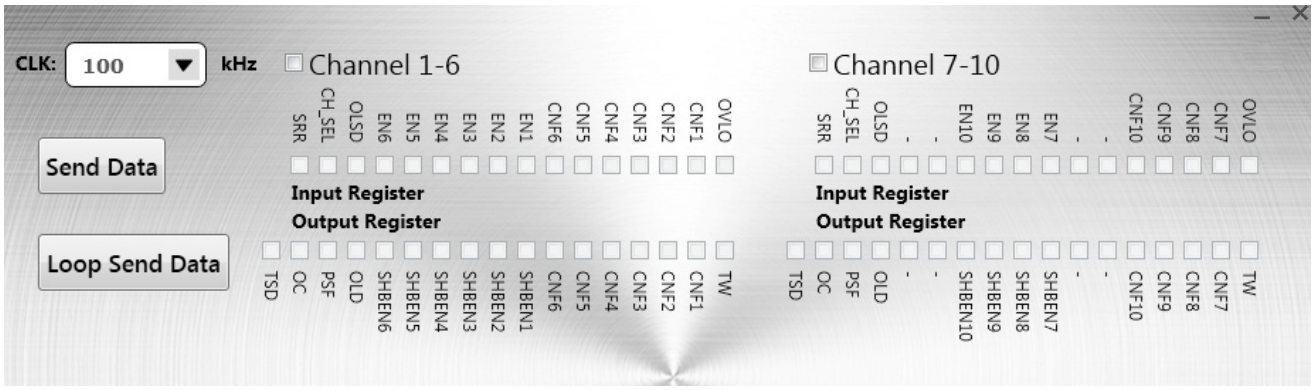

a. Tick the “Channel1-6” and “Channel7-10” to select corresponding channels.

b. Freely configure to the input registers according to the datasheet.

c. Select SPI clock signal frequency through the CLK drop-down menu.

d. Click “Send Data” to send for one time, and click “Loop Send Data” to send data repeatedly with a fixed frequency.

e. All register bits are labeled, and easy to find the status of all output bits.

NOTICE: The information in this document is subject to change without notice. Users should warrant and guarantee that third party Intellectual Property rights are not infringed upon when integrating MPS products into any application. MPS will not assume any legal responsibility for any said applications.

MPS Proprietary Information. Patent Protected. Unauthorized Photocopy and Duplication Prohibited.
© 2019 MPS. All Rights Reserved.