61481-1 ✔ ACTIVE

FASTON | FASTON 110

TE Internal #: 61481-1

Quick Disconnect Receptacle, Uninsulated, 22 – 18 AWG, .32 – .82 mm² Wire, 2.8 mm [.11 in] Tab Width, F-Crimp, Flag, Brass, Tin Plating, FASTON 110

View on TE.com >

Terminals & Splices > Quick Disconnects

Quick Disconnect Terminal Type: **Receptacle**

Wire Size: **.32 – .82 mm²**

Mating Tab Width: **2.8 mm [.11 in]**

Mating Tab Thickness: **.51 mm [.02 in]**

Features

Configuration Features

Compatible With Wire & Cable Type	Discrete Wire
Connection Capacity	Single

Contact Features

Quick Disconnect Terminal Type	Receptacle
Mating Tab Width	2.8 mm[.11 in]
Mating Tab Thickness	.51 mm[.02 in]
Terminal Orientation	Flag
Contact Base Material	Brass
Terminal Plating Material	Tin
Crimp Type	F-Crimp
Barrel Type	Open

Termination Features

Product Terminates To	Wire & Cable

Mechanical Attachment

Wire Insulation Support	With
Mating Retention Type	Dimple

Dimensions

Product Length	10.92 mm[.43 in]
Compatible Insulation Diameter Range	1.52 – 2.54 mm[.06 – .1 in]
Terminal Material Thickness	.25 mm[.01 in]
Wire Size	.32 – .82 mm²

Usage Conditions

Insulation Option	Uninsulated
Operating Temperature Range	-40 – 110 °C[-40 – 230 °F]

Industry Standards

Compatible With Agency/Standards Products	CSA, UL

Packaging Features

Packaging Quantity	12000
Packaging Method	Strip/Reel

Product Compliance

For compliance documentation, visit the product page on TE.com>

EU RoHS Directive 2011/65/EU	Compliant
EU ELV Directive 2000/53/EC	Compliant
China RoHS 2 Directive MIIT Order No 32, 2016	No Restricted Materials Above Threshold
EU REACH Regulation (EC) No. 1907/2006	Current ECHA Candidate List: JUNE 2025 (250) Candidate List Declared Against: JUNE 2025 (250) Does not contain REACH SVHC
Halogen Content	Low Halogen - Br, Cl, F < 900 ppm per homogenous material. Also BFR/CFR/PVC Free
Solder Process Capability	Not applicable for solder process capability

Product Compliance Disclaimer

This information is provided based on reasonable inquiry of our suppliers and represents our current actual knowledge based on the information they provided. This information is subject to change. The part numbers that TE has identified as EU RoHS compliant have a maximum concentration of 0.1% by weight in homogenous materials for lead, hexavalent chromium, mercury, PBB, PBDE, DBP, BBP, DEHP, DIBP, and 0.01% for cadmium, or qualify for an exemption to these limits as defined in the Annexes of Directive 2011/65/EU (RoHS2). Finished electrical and electronic equipment products will be CE marked as required by Directive 2011/65/EU. Components may not be CE marked. Additionally, the part

numbers that TE has identified as EU ELV compliant have a maximum concentration of 0.1% by weight in homogenous materials for lead, hexavalent chromium, and mercury, and 0.01% for cadmium, or qualify for an exemption to these limits as defined in the Annexes of Directive 2000/53/EC (ELV). Regarding the REACH Regulation, the information TE provides on SVHC in articles for this part number is based on the latest European Chemicals Agency (ECHA) 'Guidance on requirements for substances in articles' posted at this URL: https://echa.europa.eu/guidance-documents/guidance-on-reach

Compatible Parts

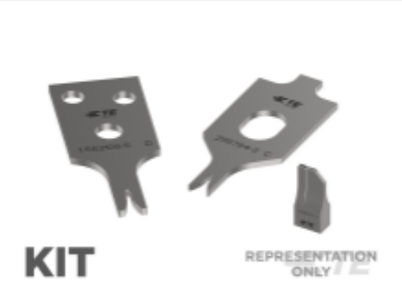

TE Part # 7-2150108-7
OCEAN_2.0_SPARE_PART_KIT-062F100F

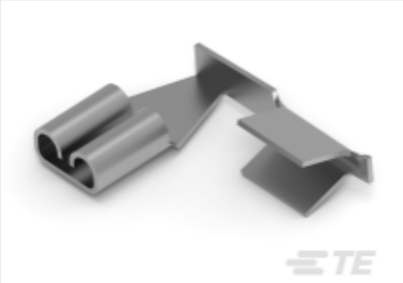

TE Part # 61549-2
110 FASTON FLAG REC 22-16 AWG TPBR

TE Part # 2150108-1
OCEAN_2.0_Applicator-E-062F100F-SEM

TE Part # 2150108-2
OCEAN_2.0_Applicator-E-062F100F-SEA

Also in the Series | FASTON 110

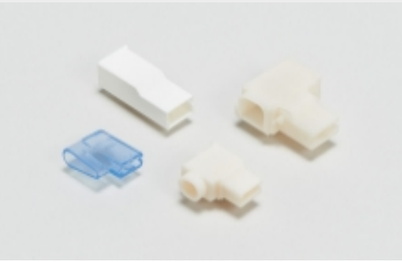

Crimp Terminal Housings(13)

Insertion & Extraction Tools(1)

PCB Terminals(22)

Quick Disconnects(163)

Customers Also Bought

TE Part #T4151210005-003
RPC-M12-MR-5CON-PVC-1.5

TE Part #86557-6
FFC PIN ROUND WIRE PLATED

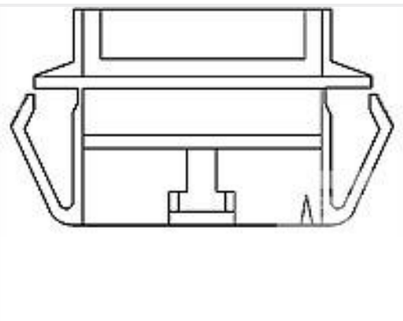

TE Part #103682-3
04 MTE PANEL MOUNT SR

TE Part #183077-1
FREE HANG.17-16STD.SEX SRS 1

TE Part #280621-1
MOD I CRIMP CONTACT

TE Part #6-1415537-5
SR6A6K24

TE Part #3-1734577-1
MOD-JK,8P8C,SHD W/O LED, 6u" A

TE Part #1-2366515-8
DYNAMIC D1000 SLIM REC HSG 8P X KEY

TE Part #6368115-1
MJ,TE,8P,SHLD,PNL STOPS&GRD, HTN

TE Part #1-1461491-8
PCN-124D3MH,000

Documents

Product Drawings

110 FASTON FLAG REC 22-18 AWG TPBR

English

CAD Files

Customer View Model

ENG_CVM_CVM_61481-1_P.2d_dxf.zip

English

3D PDF

3D

Customer View Model

ENG_CVM_CVM_61481-1_P.3d_igs.zip

English

Customer View Model

ENG_CVM_CVM_61481-1_P.3d_stp.zip

English

By downloading the CAD file I accept and agree to the Terms and Conditions of use.

Datasheets & Catalog Pages

1654742_HOUSEHOLD_APPLIANCES_RAST5

English

82004 FASTON Terminals (Insulated and Uninsulated) Catalog - FASTON Receptacles Section

English

Product Specifications

Application Specification

English

Agency Approvals

UL Report

English