

Ultrasonic sensor

UCC1000-30GM-E6R2-V15

- High chemical resistance through PTFE coated transducer surface
- Parameterization interface for the application-specific adjustment of the sensor setting via the service program ULTRA 3000
- 2 programmable switch outputs
- Hysteresis mode selectable
- Window mode selectable
- Synchronization options
- Adjustable acoustic power and sensitivity
- Temperature compensation

Single head system

Dimensions

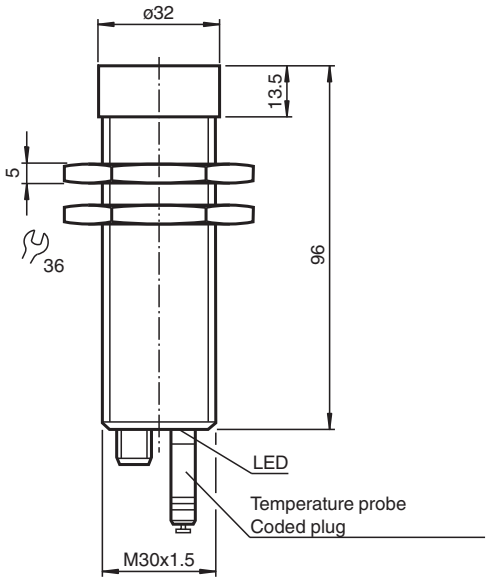

Technical Data

General specifications		
Sensing range		80 ... 1000 mm
Adjustment range		120 ... 1000 mm
Dead band		0 ... 80 mm
Standard target plate		100 mm x 100 mm
Transducer frequency		approx. 175 kHz
Response delay		65 ms minimum 195 ms factory setting
Indicators/operating means		
LED green		solid: Power-on flashing: Standby mode or program function object detected
LED yellow 1		solid: switching state switch output 1 flashing: program function
LED yellow 2		solid: switching state switch output 2 flashing: program function

Release date: 2025-09-04 Date of issue: 2025-09-04 Filename: 120334_eng.pdf

Technical Data

LED red		solid: temperature/program plug not connected flashing: fault or program function object not detected
Temperature/teach-in connector		Temperature compensation , Switch points programming , output function setting
Electrical specifications		
Operating voltage	U_B	10 ... 30 V DC , ripple 10 $\%_{SS}$
No-load supply current	I_0	≤ 50 mA
Time delay before availability	t_v	≤ 600 ms
Interface		
Interface type		RS 232, 9600 Bit/s , no parity, 8 data bits, 1 stop bit
Input/Output		
Synchronization		bi-directional 0 level -U_B...+1 V 1 level: +4 V...+U_B input impedance: > 12 KOhm synchronization pulse: ≥ 100 µs, synchronization interpulse period: ≥ 2 ms
Synchronization frequency		
Common mode operation		max. 30 Hz
Multiplex operation		≤ 30 Hz / n , n = number of sensors , n ≤ 5
Output		
Output type		2 switch outputs PNP, NO/NC, programmable
Rated operating current	I_e	200 mA , short-circuit/overload protected
Voltage drop	U_d	≤ 2.5 V
Repeat accuracy		≤ 0.1 % of full-scale value
Switching frequency	f	≤ 2.5 Hz
Range hysteresis	H	1 % of the adjusted operating range (default settings), programmable
Temperature influence		≤ 2 % from full-scale value (with temperature compensation) ≤ 0.2 %/K (without temperature compensation)
Compliance with standards and directives		
Standard conformity		
Standards		EN IEC 60947-5-2:2020 IEC 60947-5-2:2019
Approvals and certificates		
UL approval		cULus Listed, General Purpose
CCC approval		CCC approval / marking not required for products rated ≤36 V
Ambient conditions		
Ambient temperature		0 ... 70 °C (32 ... 158 °F)
Storage temperature		-40 ... 85 °C (-40 ... 185 °F)
Mechanical specifications		
Connection type		Connector plug M12 x 1 , 5-pin
Degree of protection		IP65
Material		
Housing		Stainless steel 1.4305 / AISI 303 O-ring for cover seal: Viton
Transducer		PTFE (diaphragm surface)
Mass		140 g
Dimensions		
Length		96 mm
Diameter		30 mm
Factory settings		
Output 1		Switching point: 120 mm output function: Switch point operation mode output behavior: NO contact
Output 2		Switching point: 1000 mm output function: Switch point operation mode output behavior: NO contact

Release date: 2025-09-04 Date of issue: 2025-09-04 Filename: 120334_eng.pdf

Connection Assignment

Standard symbol/Connection:
(version E6, pnp)

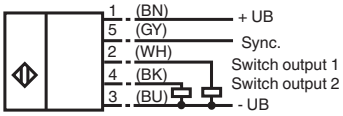

Core colors in accordance with EN 60947-5-2.

Connection Assignment

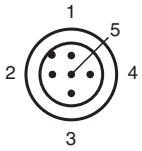

Characteristic Curve

Characteristic response curves

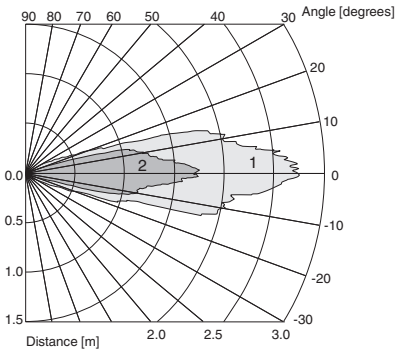

Curve 1: flat plate 100 mm x 100 mm
Curve 2: round bar, Ø 25 mm

Release date: 2025-09-04 Date of issue: 2025-09-04 Filename: 120334_eng.pdf

Characteristic Curve

Possible operating modes

1. Switch point mode
When A1 < A2, both switch outputs are activated as N.O. contacts.

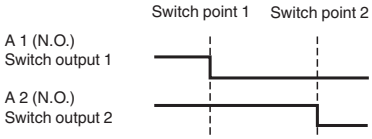

When A1 > A2, both switch outputs are activated as N.C. contacts.

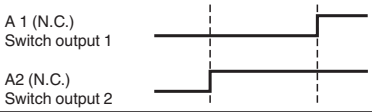

2. Window mode
To exchange the switching distances is of no effect.

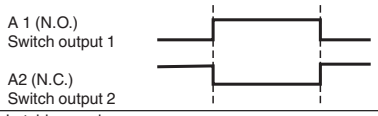

3. Latching mode
To exchange the switching distances is of no effect.

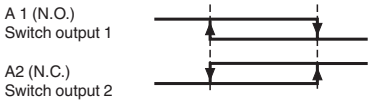

Release date: 2025-09-04 Date of issue: 2025-09-04 Filename: 120334_eng.pdf

Programming

Programming procedure

The sensor features 2 programmable switch outputs with programmable switch points. Programming the switch points and the operating mode is done either via the sensors RS232 interface and the ULTRA 3000 software (see the ULTRA 3000 software description) or by means of the programming plug at the sensors rear end which is described here.



Programming switch points 1 and 2

1. Disconnect supply voltage
2. Remove the programming plug to activate program mode.
3. Reconnect supply voltage (Reset)
4. Place the target at the desired switch point position for A1
5. Momentarily insert the programming plug in position A1 and then remove. This will program the switch point A1.
6. Place the target at the desired switch point position for A2
7. Momentarily insert the programming plug in position A2 and then remove. This will program the switch point A2.

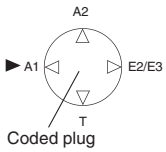

Notes:

- Removing the programming plug saves the new switch point position into the device memory.
- The programming status is indicated by the LED. A flashing green LED indicates that the target is detected; a flashing red LED indicates that no target is detected.

Programming the operation mode

If the program mode is still activated, continue at number 4. If not, activate program mode by performing the sequence numbers 1 to 3.

1. Disconnect supply voltage
2. Remove the programming plug to activate program mode.
3. Reconnect supply voltage (Reset)
4. Insert the programming plug in position E2/E3. By removing and reinserting the plug, the user can toggle through the three different modes of operation. The selected mode is indicated by the LEDs as shown below:
   - Switch point mode, LED A1 flashes
   - Window mode, LED A2 flashes
   - Latching mode, LEDs A1 and A2 flash
5. Once the desired mode is selected, insert the programming plug in position T. This completes the programming procedure and saves the switch points and mode of operation.
6. The sensor now operates in normal mode.

Note:

The programming plug also functions as the temperature compensation. If the programming plug has not been inserted in the T position within 5 minutes, the sensor will return to normal operating mode with the latest saved values, without temperature compensation.

Factory Setting

Factory settings

See technical data.

Indication

The sensor provides LEDs to indicate various conditions.

Release date: 2025-09-04 Date of issue: 2025-09-04 Filename: 120334_eng.pdf

	Green LED	Red LED	Yellow LED A1	Yellow LED A2
During Normal Operation				
- Temperature compensated	On	Off	Switching state A1	Switching state A2
- with removed programming plug	Off	On	Switching state A1	Switching state A2
Interference (e.g. compressed air)	Off	Flashing	remains in previous state	remains in previous state
During Sensor Programming				
Switch point A1:				
Object detected	Flashing	Off	Flashing	Off
No object detected	Off	Flashing	Flashing	Off
Switch Point A2:				
Object detected	Flashing	Off	Off	Flashing
No object detected	Off	Flashing	Off	Flashing
Operation mode:				
Switch point mode	On	Off	Flashing	Off
Window mode	On	Off	Off	Flashing
Latching mode	On	Off	Flashing	Flashing
Standby	Flashing	Off	previous state	previous state

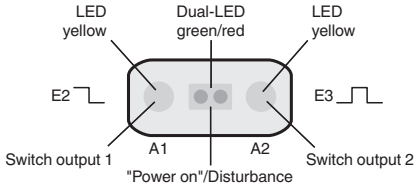

Commissioning

Synchronization

This sensor features a synchronization input for suppressing ultrasonic mutual interference ("cross talk"). If this input is not connected, the sensor will operate using internally generated clock pulses. It can be synchronized by applying an external square wave. The pulse duration must be ≥ 100 µs. Each falling edge of the synchronization pulse triggers transmission of a single ultrasonic pulse. If the synchronization signal remains low for ≥ 1 second, the sensor will revert to normal operating mode. Normal operating mode can also be activated by opening the signal connection to the synchronization input (see note below).
If the synchronization input goes to a high level for > 1 second, the sensor will switch to standby mode, indicated by the green LED. In this mode, the outputs will remain in the last valid output state.

Note:
If the option for synchronization is not used, the synchronization input has to be connected to ground (0 V) or the sensor must be operated via a V1 cordset (4-pin).
The synchronization function cannot be activated during programming mode and vice versa.

The following synchronization modes are possible:

1. Several sensors (max. number see technical data) can be synchronized together by interconnecting their respective synchronization inputs. In this case, each sensor alternately transmits ultrasonic pulses in a self multiplexing mode. No two sensors will transmit pulses at the same time (see note below).
2. Multiple sensors can be controlled by the same external synchronization signal. In this mode the sensors are triggered in parallel and are synchronized by a common external synchronization pulse.
3. A separate synchronization pulse can be sent to each individual sensor. In this mode the sensors operate in external multiplex mode (see note below).
4. A high level (+U_B) on the synchronization input switches the sensor to standby mode.

Note:
Sensor response times will increase proportionally to the number of sensors that are in the synchronization string. This is a result of the multiplexing of the ultrasonic transmit and receive signal and the resulting increase in the measurement cycle time.

Additional Information

Note on communication with the UC-30GM-R2 interface cable

The UC-30GM-R2 interface cable allows for communication with the ultrasonic sensor using ULTRA3000 software. The cable creates a connection between a PC RS-232 interface and the programming plug socket on the sensor. When connecting to the sensor, make certain the plug is lined up correctly; otherwise no communication will be possible. The key of the cable's plug must be aligned to the groove of the socket on the sensor (not with the arrow symbol on the sensor).

RS 232-connection

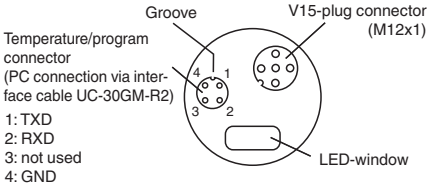

Programmable parameters with the ULTRA3000 software

- Switch point 1 and 2
- NO/NC function
- Operation mode
- Sonic speed
- Temperature offset (The inherent temperature-rise of the sensor can be considered in the temperature compensation)
- Expansion of the unusable area (for suppression of unusable area echoes)
- Reduction of the detection range (for suppression of remote range echoes)

Release date: 2025-09-04 Date of issue: 2025-09-04 Filename: 120334_eng.pdf

- Time of measuring cycle
- Acoustic power (interference of the burst duration)
- Sensitivity
- Behaviour of the sensor in case of echo loss
- Behaviour of the sensor in case of a fault
- Average formation via an allowed number of measuring cycles
- On/off-delay
- Switching hysteresis
- Selection of the parameter set, RS 232 or manually

Note:
When connected to a PC and running the ULTRA3000 software, the sensor can act as a long term data logger as well.

Installation Conditions

If the sensor is installed in an environment where the temperature can fall below 0 °C, one of these mounting flanges must be used for mounting: BF30, BF30-F, or BF 5-30.
If it is intended to operate the sensor at - 25 °C, we recommend discussing the mounting situation with a Pepperl + Fuchs application specialist to ensure a trouble-free operation.
If the sensor is mounted in a through hole using the included steel nuts, it must be mounted at the middle of the threaded housing. If it must be mounted at the front end of the threaded housing, plastic nuts with centering ring (optional accessories) must be used.

Release date: 2025-09-04 Date of issue: 2025-09-04 Filename: 120334_eng.pdf