Data sheet



MAX30N-72A10BC0500

MAX

MAGNETOSTRICTIVE LINEAR ENCODERS

SICK
Sensor Intelligence.



Illustration may differ

Ordering information

Type	part no.
MAX30N-72A10BC0500	1110402

Other models and accessories ➜ www.sick.com/MAX

Detailed technical data

Features

Items supplied	Accessories not included with delivery, please order separately.

Safety-related parameters

$MTTF_D$ (mean time to dangerous failure)	69 years (EN ISO 13849-1) [1]

[1] This product is a standard product and does not constitute a safety component as defined in the Machinery Directive. Calculation based on nominal load of components, average ambient temperature of the electronics 60 °C, frequency of use 8,760 h/a.
Every 2nd failure of an electronic component is considered hazardous.

Performance

Type	30 mm installation housing – IN cylinder mounting
Pressure pipe/End cap	7 mm / Flat
Connection type	Male connector, M12 type S (20x20 mm), 4-pin
Direction of connection	Radial
Measuring range	
Measured values	Positioning
Position (F.S.)	0 mm ... 500 mm [1]
Null zone	21.5 mm
Damping zone	30 mm
Operating conditions	
Fluid temperature	–30 °C ... +95 °C [2]
Air humidity	90 % (Condensation not permitted)
Operating pressure P_N	320 bar
Supply voltage	24 V DC (8 ... 32 V DC)
Switch-on time	< 250 ms
Switch-on current	2,5 A/ 50 µs
Measuring frequency (internal)	2 ms
Transmission rate (cycle time)	Steady
Accuracy	
Setpoint tolerance	≤ ± 1 mm

[1] F.S. = Full Scale (Measuring range).
[2] Depends on the maximum fluid temperature, the permissible temperature of the O-ring and the temperature-dependent signal quality of the position magnet.
[3] Hydraulic oil at operating temperature.

Hysteresis	± 0,1 mm
Repeatability	Typ. ± 0.2 mm
Linearity	Typ. ± 0.25 mm (measuring range 50 to 500 mm) [3]
	Typ. ± 0.04% F.S. (Measuring range from 500 to 1,500 mm)
Temperature drift	
Warming up phase	Typ. ≤ ± 0.25 mm (2 min)
In the operational status	Typ. ± 0.25 mm (measuring range 50 to 500 mm) [3]
	Typ. ± 0.04% F.S. (Measuring range from 500 to 1,500 mm)

[1] F.S. = Full Scale (Measuring range).
[2] Depends on the maximum fluid temperature, the permissible temperature of the O-ring and the temperature-dependent signal quality of the position magnet.
[3] Hydraulic oil at operating temperature.

Interfaces

Communication interface	Analog
Communication Interface detail	Current
Current output	4 mA ... 20 mA

Electronics

Connection type	Male connector, M12 type S (20x20 mm), 4-pin
PIN assignment	1=V DC; 2=SIG; 3=GND; 4=n.c.
Electrical operation	
Supply voltage	24 V DC (8 ... 32 V DC)
Residual ripple	< 1% S-S
Power consumption	≤ 1.25 W
Current consumption	≤ 50 mA
Load resistance	100 Ω ≤ RL ≤ 500 Ω
Overvoltage protection during power-up (60 s)	≤ 36 V at all poles during power-up (60 s) ≤ 48 V To GND during power-up (60 s)
Reverse polarity protection	≤ 36 V (at all poles) (ISO 16750-2)
Insulation resistance	Riso ≥ 10 MΩ, 60 s (ISO 16750-2)
Dielectric strength	500 V DC, 0 V DC (60 s) to housing (R_{ISO} ≥ 1 MΩ) (ISO 16750-2)
Short-circuit protection	V_S – GND on housing

Mechanics

Dimensions	
Housing	30 mm, 31f7 for IN cylinder mounting – cylinder bore hole 31H8
Ø pressure pipe	7 mm
Ø O-ring	24.99 mm x 3.53 mm
Ø support ring	31 mm x 25.8 mm x 1.4 mm
M12 flange	M12 flange type S: DM 20x20 mm - hole pattern 14 mm (EN 61076-2-101)
Wire length	80 mm
Material	
Housing	Stainless steel 1.4305 (AISI 303)
Pressure pipe	Stainless steel 1.4404, AISI 316L
O-ring	NBR 70

Support ring	PTFE
M12 male connector	Glass fiber reinforced polyamide, nickel-/gold-plated brass contacts
M12 flange	Nickel-plated brass with O-ring (NBR)
Strands	PVC

Ambient data

EMC	EU Directive 2014/30 / EU CE marking
Generic standards	EN 61000-6-2/61000-6-3
Agricultural and forestry machinery	EN ISO 14982
Transient pulses	ISO 7637-2/ISO 16750-2
ESD (air and contact discharge)	ISO 61000-4-2 / ISO 10605
Vibration	
Sine	15 g, 24 h / axis, 55 ... 2.000 Hz (IEC 60068-2-6)
Sine over noise	13 g (r.m.s), 36 h / axis, 10 ... 2.000 Hz (IEC 60068-2-80)
Broadband noise (resonance peaks removed)	15 g (r.m.s), 48 h / axis, 10 ... 2.000 Hz (IEC 60068-2-64)
Pressure load	
Operating pressure P_N	320 bar
Overload pressure $P_{max} = P_N \times 1.2$	380 bar
Test pressure $P_{stat} = P_N \times 1.5$	480 bar
Temperature and air humidity	
Storage	–20 °C ... +65 °C [1]
Operation (electronics)	–40 °C ... +105 °C [2]
Maximum air humidity	90 % (Condensation not permitted)
Enclosure rating	
Housing	IP67 (EN 60529)
M12 male connector	IP69K (ISO 20653) [3]

[1] R. H. 55%.
[2] Taking into account self-heating, generated through constant electrical operation with supply voltage.
[3] With suitable coupling (sealing through O-ring in M12 coupling nut).

Certificates

EU declaration of conformity	✓
UK declaration of conformity	✓
ACMA declaration of conformity	✓
China-RoHS	✓

Classifications

ECLASS 5.0	27270705
ECLASS 5.1.4	27270705
ECLASS 6.0	27270705
ECLASS 6.2	27270705
ECLASS 7.0	27270705
ECLASS 8.0	27270705
ECLASS 8.1	27270705

ECLASS 9.0	27270705
ECLASS 10.0	27270705
ECLASS 11.0	27270705
ECLASS 12.0	27274304
ETIM 5.0	EC002544
ETIM 6.0	EC002544
ETIM 7.0	EC002544
ETIM 8.0	EC002544
UNSPSC 16.0901	41111613

Dimensional drawing M12 connector type S/ flange - axial seal

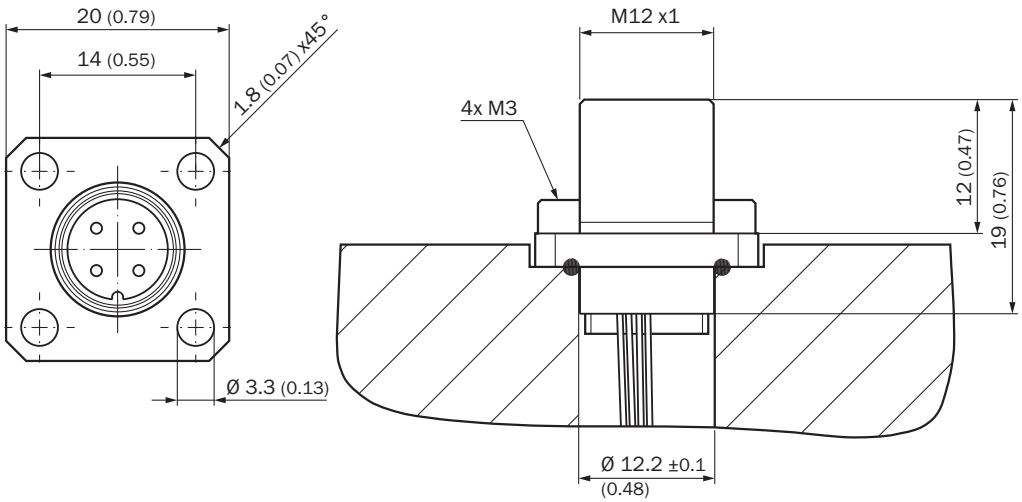

Dimensions in mm (inch)

installation of position magnet

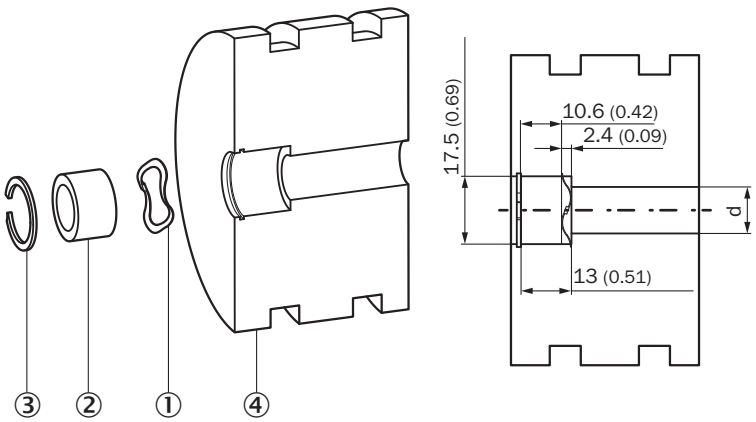

Dimensions in mm (inch)
① corrugated spring washer
② Position magnet
③ circlip

④ piston

Position magnet

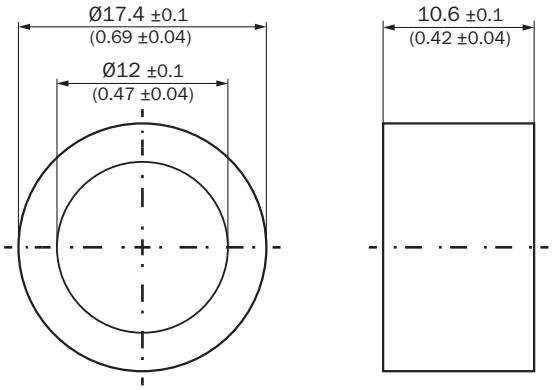

Dimensions in mm (inch)

circlip

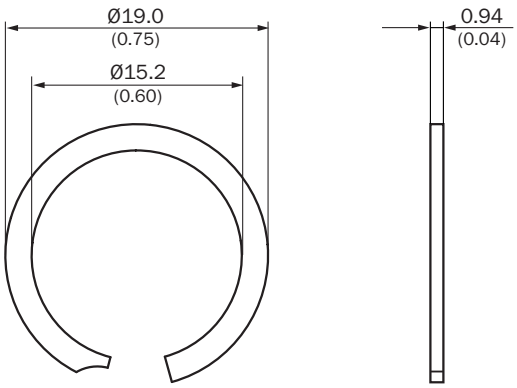

Dimensions in mm (inch)

corrugated spring washer

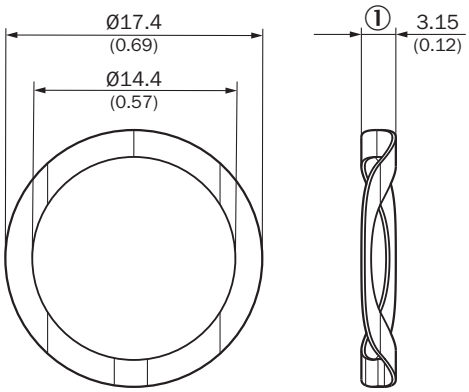

Dimensions in mm (inch)

① Free height

Dimensional drawing MAX30N

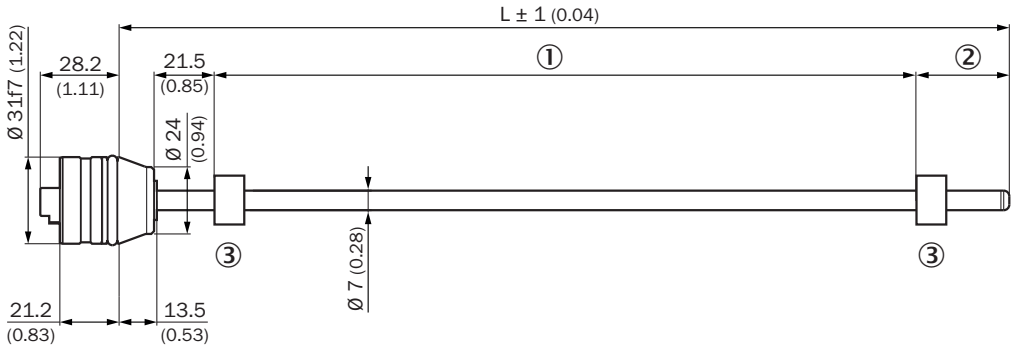

Dimensions in mm (inch)
① Measuring range
② damping zone
③ Position magnet

Dimensional drawing M12 male connector

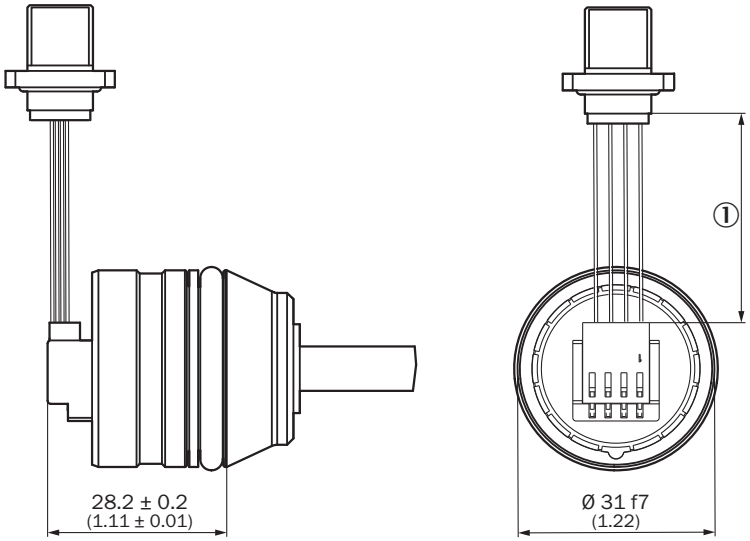

Dimensions in mm (inch)
① Cable length

Attachment specifications Installation cavity for the piston rod and pressure pipe

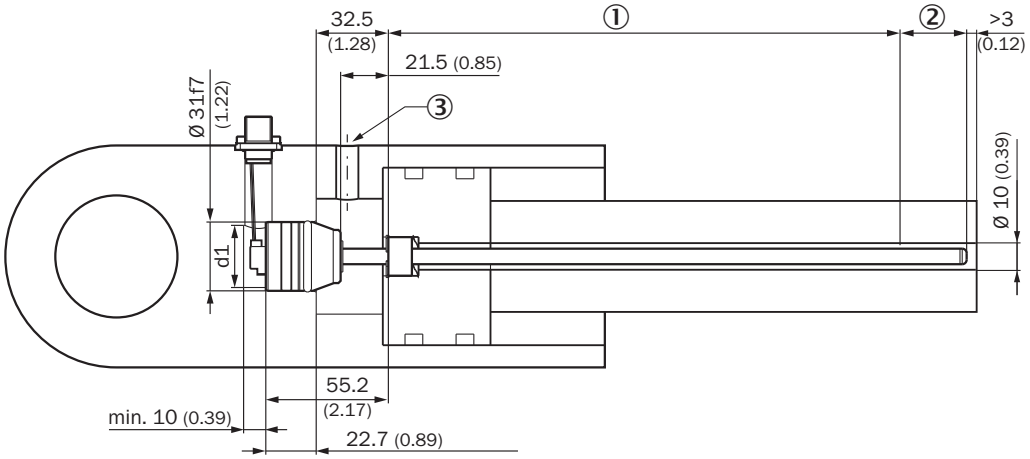

Please note the information in the operating instructions (d: 32 ≤ d1 ≤ 40).
① Measuring range
② damping zone
③ Hydraulic port

PIN assignment

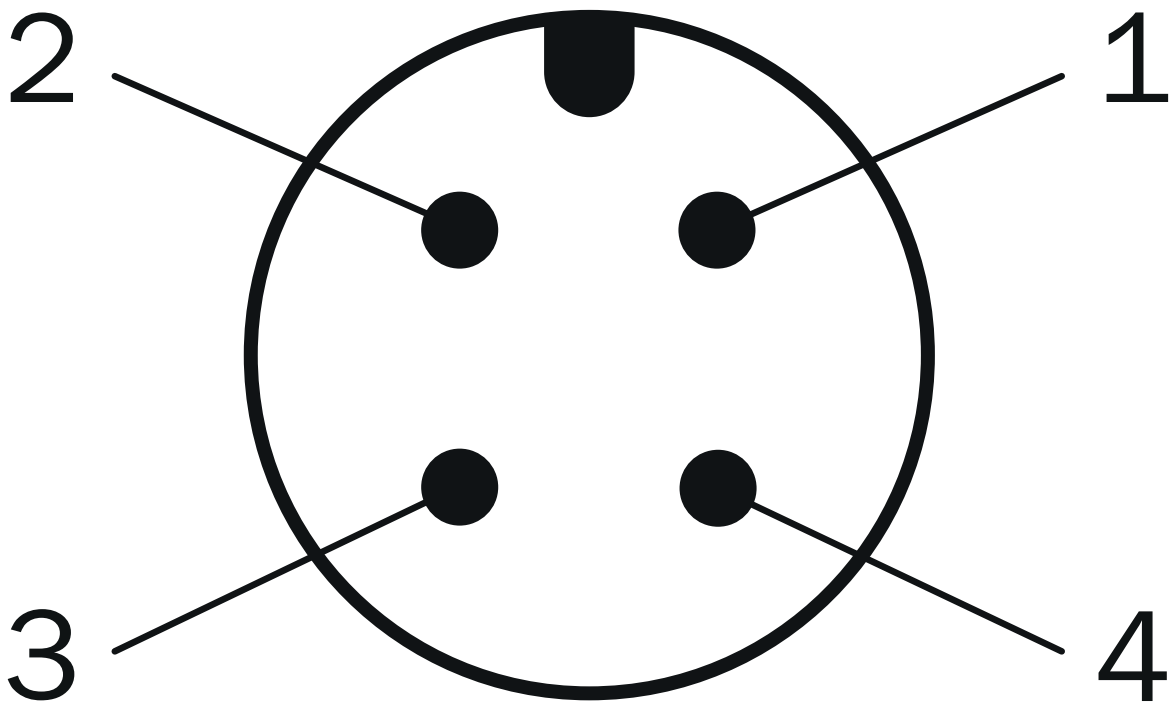

Pin assignment B (type S)
① V DC
② Signal
③ GND

④ N.C.

Connection diagram

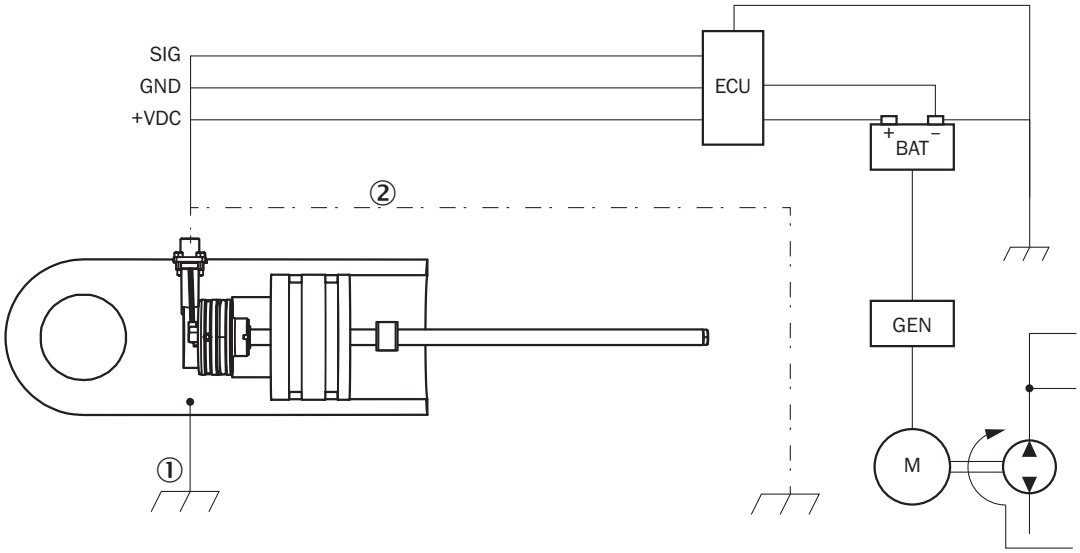

connection diagram
① Chassis GND
② Cable shielding (optional)

Recommended accessories

Other models and accessories ➜ www.sick.com/MAX

	Brief description	Type	part no.
Mounting systems			
	• **Description:** Retaining ring for installing the position magnets in the piston of the hydraulic cylinder • **Material:** Stainless steel • **Details:** Stainless steel 1.4319 • **Packing unit:** 1 piece	BEF-MK-SR-01	2116437
	• **Description:** Retaining ring for installing the position magnets in the piston of the hydraulic cylinder • **Material:** Stainless steel • **Details:** Stainless steel 1.4319 • **Packing unit:** 5 pieces	BEF-MK-SR-05	2116438
	• **Description:** Retaining ring for installing the position magnets in the piston of the hydraulic cylinder • **Material:** Stainless steel • **Details:** Stainless steel 1.4319 • **Packing unit:** 10 pieces	BEF-MK-SR-10	2116439
	• **Description:** Retaining ring for installing the position magnets in the piston of the hydraulic cylinder • **Material:** Stainless steel • **Details:** Stainless steel 1.4319 • **Packing unit:** 50 pieces	BEF-MK-SR-50	2116440
	• **Description:** Corrugated spring washer for installing the position magnets in the piston of the hydraulic cylinder • **Material:** Stainless steel • **Details:** 1.4568 (17-7 PH Condition CH900) • **Packing unit:** 1 piece	BEF-MK-WF-01	2116431
	• **Description:** Corrugated spring washer for installing the position magnets in the piston of the hydraulic cylinder • **Material:** Stainless steel • **Details:** 1.4568 (17-7 PH Condition CH900) • **Packing unit:** 5 pieces	BEF-MK-WF-05	2116432
	• **Description:** Corrugated spring washer for installing the position magnets in the piston of the hydraulic cylinder • **Material:** Stainless steel • **Details:** 1.4568 (17-7 PH Condition CH900) • **Packing unit:** 10 pieces	BEF-MK-WF-10	2116433
	• **Description:** Corrugated spring washer for installing the position magnets in the piston of the hydraulic cylinder • **Material:** Stainless steel • **Details:** 1.4568 (17-7 PH Condition CH900)	BEF-MK-WF-50	2116435

	Brief description	Type	part no.
	• **Packing unit:** 50 pieces		
	• **Description:** Flange for M12 male connector, type S square flange (20 mm x 20 mm) with axial seal, 1 piece • **Material:** Brass • **Details:** Nickel-plated brass • **Packing unit:** 1 piece	BEF-FA-M12S-01	2117507
	• **Description:** Flange for M12 male connector, type S square flange (20 mm x 20 mm) with axial seal, 5 pieces • **Material:** Brass • **Details:** Nickel-plated brass • **Packing unit:** 5 pieces	BEF-FA-M12S-05	2117508
	• **Description:** Flange for M12 male connector, type S square flange (20 mm x 20 mm) with axial seal, 10 pieces • **Material:** Brass • **Details:** Nickel-plated brass • **Packing unit:** 10 pieces	BEF-FA-M12S-10	2117509
magnets			
	• **Product segment:** Magnets • **Product:** Position magnets • **Description:** Position magnet for magnetostrictive linear encoders Installation: in hydraulic cylinder using corrugated spring washer SICK part no. 2116431 Temperature range: –30 °C ... +95 °C Dimensions: 17.4x12x10.6 mm Media: lubricants, hydraulic oils, no aggressive fluids (e.g., acids or bases)	MAG-0-174-01	2112714
	• **Product segment:** Magnets • **Product:** Position magnets • **Description:** Position magnet for magnetostrictive linear encoders Installation: in hydraulic cylinder using corrugated spring washer SICK part no. 2116431 Temperature range: –30 °C ... +95 °C Dimensions: 17.4x12x10.6 mm Media: lubricants, hydraulic oils, no aggressive fluids (e.g., acids or bases)	MAG-0-174-05	2112713
	• **Product segment:** Magnets • **Product:** Position magnets • **Description:** Position magnet for magnetostrictive linear encoders Installation: in hydraulic cylinder using corrugated spring washer SICK part no. 2116431 Temperature range: –30 °C ... +95 °C Dimensions: 17.4x12x10.6 mm Media: lubricants, hydraulic oils, no aggressive fluids (e.g., acids or bases)	MAG-0-174-10	2115045
	• **Product segment:** Magnets • **Product:** Position magnets • **Description:** Position magnet for magnetostrictive linear encoders Installation: in hydraulic cylinder using corrugated spring washer SICK part no. 2116431 Temperature range: –30 °C ... +95 °C Dimensions: 17.4x12x10.6 mm Media: lubricants, hydraulic oils, no aggressive fluids (e.g., acids or bases)	MAG-0-174-50	2112711

SICK AT A GLANCE

SICK is one of the leading manufacturers of intelligent sensors and sensor solutions for industrial applications. A unique range of products and services creates the perfect basis for controlling processes securely and efficiently, protecting individuals from accidents and preventing damage to the environment.

We have extensive experience in a wide range of industries and understand their processes and requirements. With intelligent sensors, we can deliver exactly what our customers need. In application centers in Europe, Asia and North America, system solutions are tested and optimized in accordance with customer specifications. All this makes us a reliable supplier and development partner.

Comprehensive services complete our offering: SICK LifeTime Services provide support throughout the machine life cycle and ensure safety and productivity.

For us, that is “Sensor Intelligence.”

WORLDWIDE PRESENCE:

Contacts and other locations –www.sick.com